芯伯乐®
XINBOLE

Product Specification

UC3846

Current type PWM controller

WEB | www.xinboleic.com



Descriptions

UC3846 adopts the fixed frequency current mode control, which improves the line voltage regulation rate and load response characteristics of the system, and simplifies the design of the control loop. The UC3846 has a built-in precision of 1% bandgap adjustable reference voltage, high-frequency oscillator, error amplifier, differential current detection amplifier, undervoltage locking circuit and soft start circuit, with push-pull conversion automatic symmetry correction, parallel operation, external turn-off, double pulse suppression and dead-time adjustment.

Feature

- Automatic feedforward compensation
- Programmable pulse by pulse current limiting function
- Automatic symmetry correction under push-pull output structure
- Good load response characteristics
- Can be run in parallel, suitable for module system
- Built-in differential current detection amplifier, wide common mode input range
- Double pulse inhibition function
- High current totem pole type output, output peak current 500mA
- Precision band gap reference power supply, accuracy of 1%
- Built-in undervoltage locking circuit
- Built-in soft start circuit
- It has an external shutdown function
- The operating frequency is up to 500KHz

Applications

- Inverter power supply
- High power high frequency switching power supply
- Dc pulse width speed control system
- UPS power supply
- DC/DC converter
- High power charger

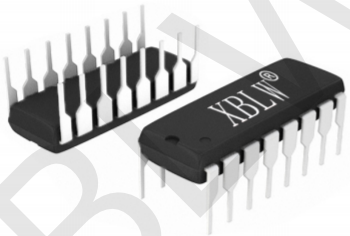

DIP-16

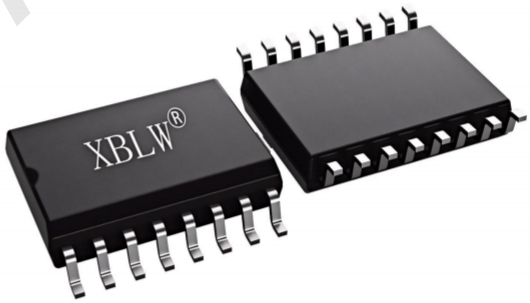

SOP-16-300mil

XBLW/XINBOLE

Ordering Information

Product Model	Package Type	Marking	Packing	Packing Qty
XBLW UC3846N	DIP-16	UC3846N	Tube	2000Pcs/Box
XBLW UC3846DWTR	SOP-16-300mil	UC3846	Tape	2000Pcs/Reel

Block Diagram

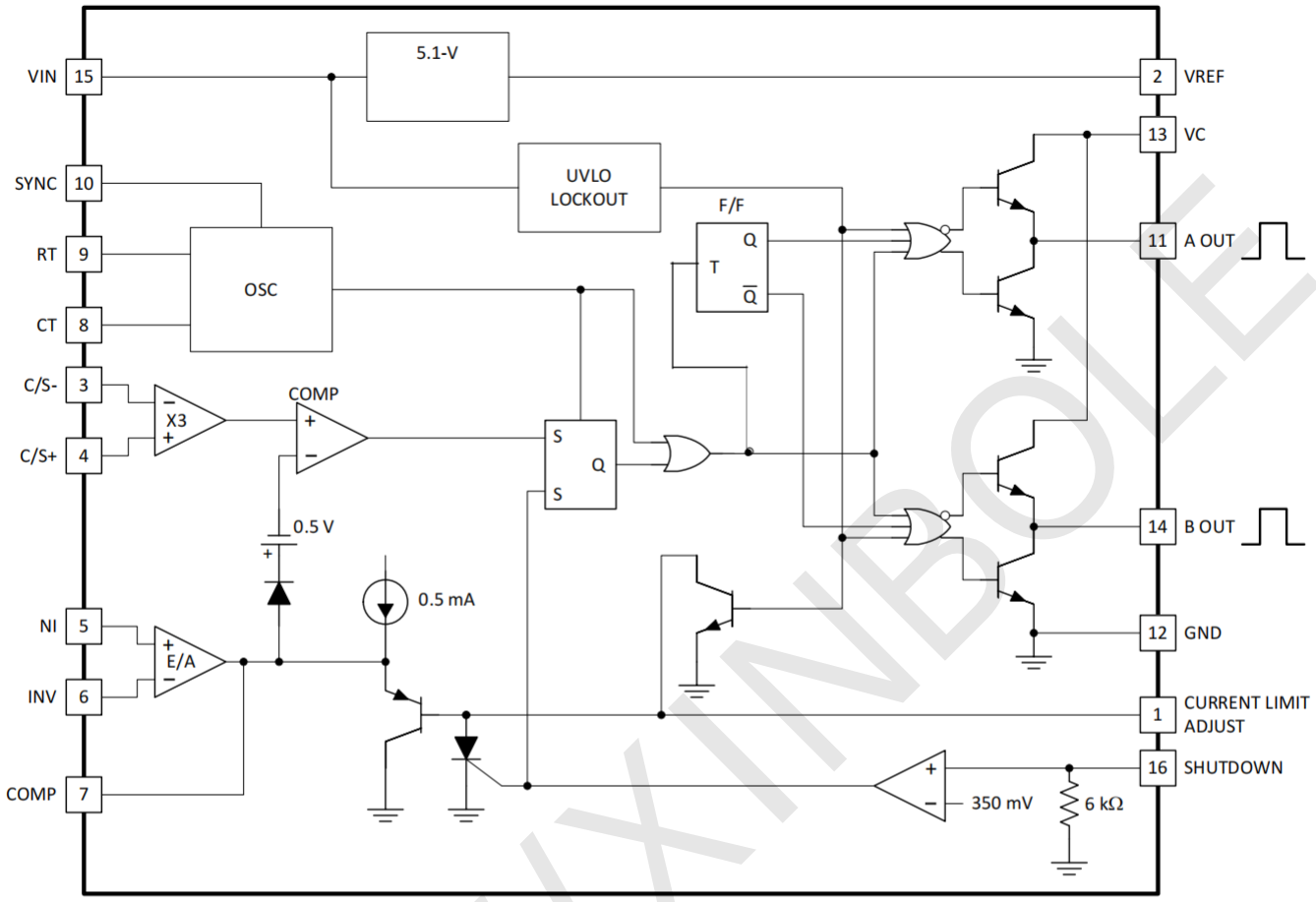

Pin Configurations

DIP-16/SOP-16-300mil
(Top View)

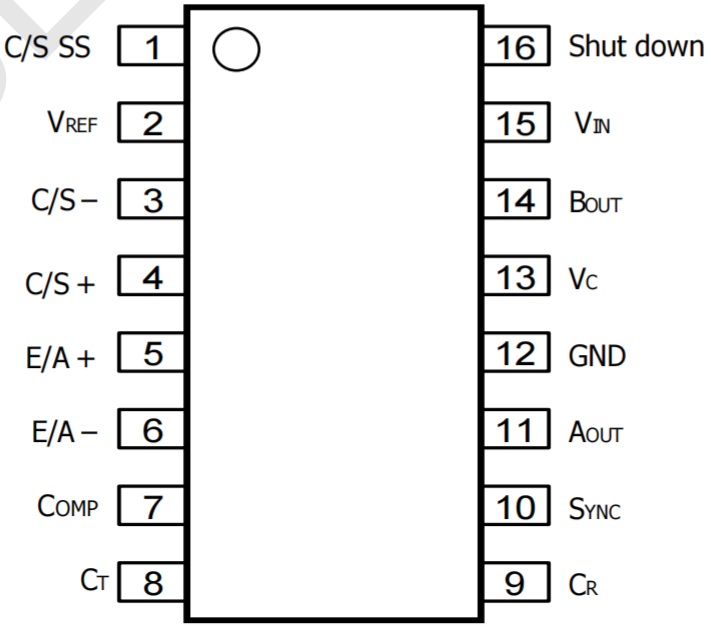

XBLW/XINBOLE

Pin Description

Pin	Symbol	Pin Description
1	C/S SS	Current limiting signal/soft-start input; This end can receive a given signal
2	V_{REF}	Reference power output; This terminal outputs a reference voltage with excellent temperature characteristics
3	C/S-	Current detection comparator reverse phase input; The terminal is connected to the current detection signal
4	C/S+	Current detection comparator positive phase input; This end receives a given signal
5	E/A+	Error amplifier in-phase input; In either closed-loop or open-loop systems, the terminal is connected to a given signal
6	E/A-	Error amplifier inverting input; In a closed-loop system, this terminal outputs a feedback signal. Feedback networks with different functions can be connected between this end and pin 7 as needed to form closed -loop regulators of proportion, integral, proportional integral and other types. In the open-loop system, this end is directly connected to the 7 feet to form the follower
7	C_{OMP}	Error amplifier output; In the closed-loop system, feedback networks of different functions can be connected between this end and pin 6 according to the need to form closed-loop regulators of proportion, integral, proportional integral, etc. In the open loop system, the end can be directly connected with pin 6 to form a follower
8	C_T	Oscillating timing capacitor access end
9	C_R	Oscillation timing resistor access end
10	S_{YNC}	Synchronization signal input. The external synchronization of the controller can be realized by inputting a single wave signal at this end. The terminal can also be used as the output end of the synchronous pulse signal to output the synchronous pulse signal to the external circuit
11	A_{OUT}	Output A; Pins 11 and 14 are two complementary outputs
12	GND	Ground of signal
13	V_C	Output stage bias voltage input
14	B_{OUT}	Output terminal B; Pins 14 and 11 are two complementary outputs
15	V_{IN}	Power input terminal
16	Shut down	External switch-off signal input

XBLW XINBOLE

Absolute Maximum Ratings

Not otherwise stated, at T_A =25°C

Symbol	Parameter	Condition of test	Min	Max	Unit
Power input	V_{IN}		-	40	V
Collector bias voltage	V_C		-	40	V
Current of output	I_O		-	500	mA
Analog input	V_A		-0.3	VIN	V
Reference output current	I_{REF}		-	30	mA
Synchronous output current	I_{sync}		-	5	mA
Error amplifier output current	$I_{o(E.A)}$		-	5	mA
Soft start perfusion current	I_{sink}		-	50	mA
Oscillator charge current	I_{osc}		-	5	mA
Power consumption (TA=25°C)	-		-	1000	mW
Temperature of storage	T_{stg}		-60	150	°C
Temperature of welding	T_{LEAD}	Go on 10s	-	300	°C

Note: Exceeding the limit parameters listed may lead to permanent damage inside the chip, and long-term operation under the limit conditions will affect the reliability of the chip.

Electrical Characteristics

Not otherwise stated, at T_A=25 ° C,V_{CC}=15V

Parameters	Symbol	Condition of test	Min	Typical	Max	Unit
Voltage reference						
Voltage reference	V_{REF}	T_J =25°C,I_O=1mA	5	5.1	5.2	V
Linear adjustment rate	Δ V_{REF}	V_{CC} =8 to 40V	-	5	20	mV
Load adjustment ratio	Δ V_{REF}	I_O=0 to 10mA	-	3	15	mV
Short circuit output current	I_{SC}	V_{REF} =0	10	45		mA
oscillator						
Voltage rejection ratio	Δ f/Δ V_{CC}	V_{CC} =8 to 40V	-	±1	±2	%
Drift of temperature	Δ f/Δ T	-	-	±1		%
The synchronization signal outputs a high level	$V_{OH(SYNC)}$		3.9	4.35		V
Synchronization signal output low level	$V_{OL(SYNC)}$			2.3	2.5	V
The synchronization signal is input at a high level	$V_{IH(SYNC)}$	Vpin8=0V	3.9			V
Synchronization signal input low level	$V_{IL(SYNC)}$	V_{pin8}=0V			2.5	V

XBLW/XINBOLE

Synchronous input current	I_{SYNC}	V_{Sync} =3.9V,V_{pin8}=0V	-	1.3	1.5	mA
Error amplifier						
Unity gain bandwidth	B_W	T_J =25	0.7	1.0		MHz
Output perfusion current	I_{SINK}	V_{ID}=-15mV~5V, V_{PIN7}=1.2V	2	6		mA
Output pull current	I_{SOURCE}	V_{ID} =15mV~V, V_{PIN7} =2.5V	0.4	0.5		mA
Output high level	V_{OL}	R_L =15KΩ	4.3	4.6		V
Output low level	V_{OH}	R_L =15KΩ		0.7	1	V
Common mode inhibition ratio	C_{MRR}	V_{CM} =0V to 38V	75	100	-	dB
Power supply rejection ratio	P_{SRR}	V_{CC} =8 to 40V	80	105	-	dB
Current detection amplifier part						
Gain of amplifier	G_V	V_{pin} 3=0V, pin 1 open circuit	2.5	2.75	3.0	V
Maximum differential input signal	$V_{I(DIFF,MAX)}$	Pin 1 is open, R_L=15 kΩ	1.1	1.2		V
Input offset voltage	V_{IO}	Pin 1 is open, R_L=15 kΩ		5	25	mV
Common mode inhibition ratio	C_{MRR}	V_{CM} =1V to 12V,V_{IN} =40V	60	83		dB
Power supply rejection ratio	P_{SRR}	V_{IN} =8V to 40V	60	84		dB
The common model circumference was entered			0		VIN-3	V
Output delay time	T_D	-		200	500	ns
Shutdown						
Shutdown Foot threshold voltage	$V_{TH(SD)}$	-	250	350	400	mV
Input voltage range	V_I		0		VIN	V
Shutdown Delay time	$T_{D(shutdown)}$	T_J=25°C		300	600	nS
Output drive						
Set - emitter voltage			40			V
Output low level I	$V_{OL\ I}$	I_{SINK} =20mA	-	0.1	0.4	V
Output low level II	$V_{OL\ II}$	I_{SINK} =100mA	-	0.4	2.1	V
Output high level I	$V_{OH\ I}$	I_{SOURCE} =20mA	13	13.5	-	V
Output high level II	$V_{OH\ II}$	I_{SOURCE} =100mA	12	13.5	-	V
Output high level II	t_R	C_L =1nF, T_j =25°C	-	50	300	nS
Time of descent	tF	C_L =1nF, T_j =25°C	-	50	300	nS
Undervoltage voltage locking						
Starting threshold	$V_{TH(ST)}$			7.7	8.0	V
Hysteresis back voltage	V_{HYS}			0.75		V
Total standby current						
Current of bias	I_{CC}			17	21	mA

XBLW/XINBOLE

Test performance parameters circuit

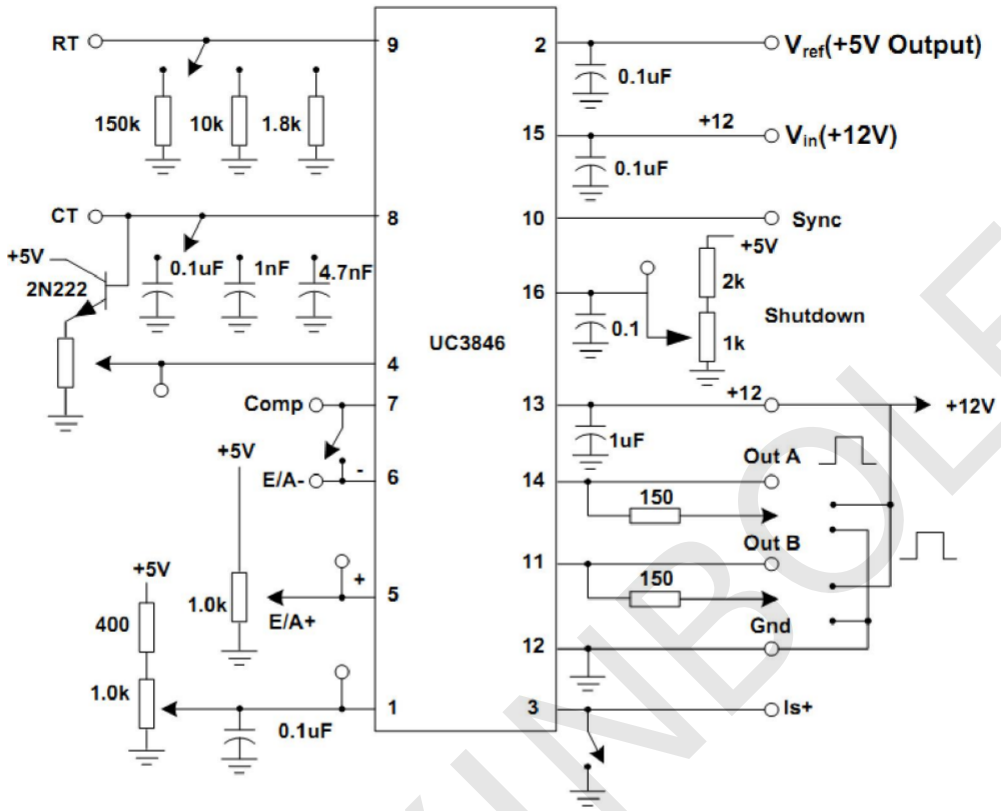

Application

1. Oscillator circuit

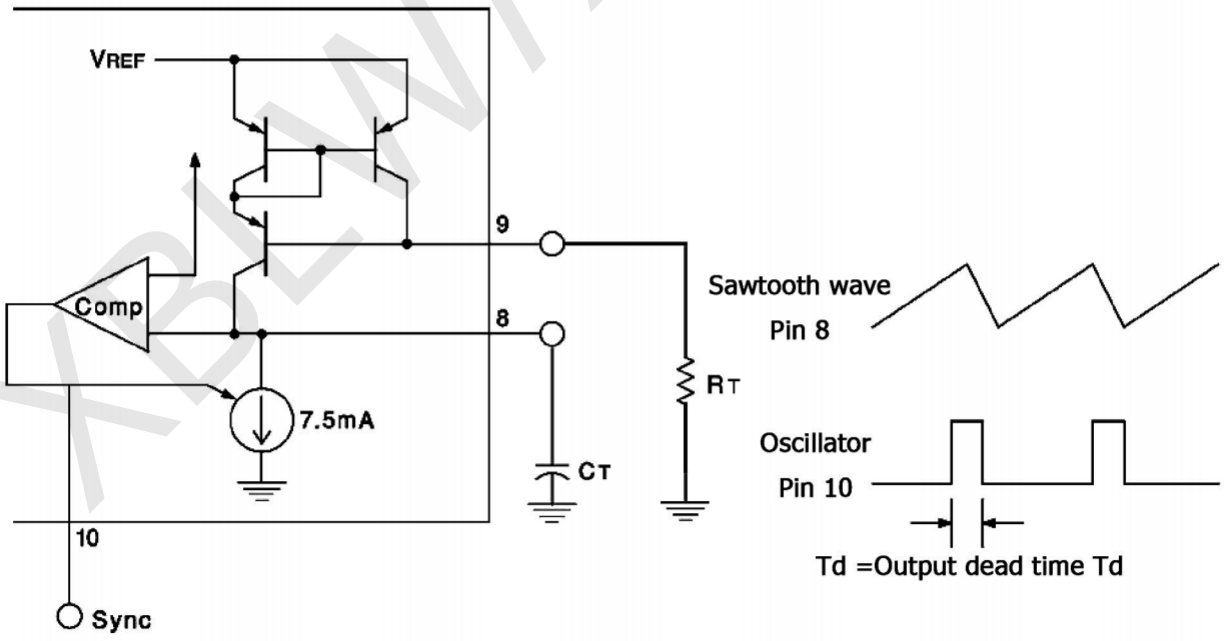

The output dead time is determined by the size of the external capacitance CT and is calculated as:
TD =145*CT [12/(12-3.6/RT)] where TD is in units of μs, C in units of μF,
and RT in units of KΩ When the RT value is relatively large, TD (μs)=145*CT(μF);
The oscillator frequency is approximately fT (KHz)=2.2/RT (KΩ)CT (μF).

XBLW/XINBOLE

2. Error amplifier output configuration

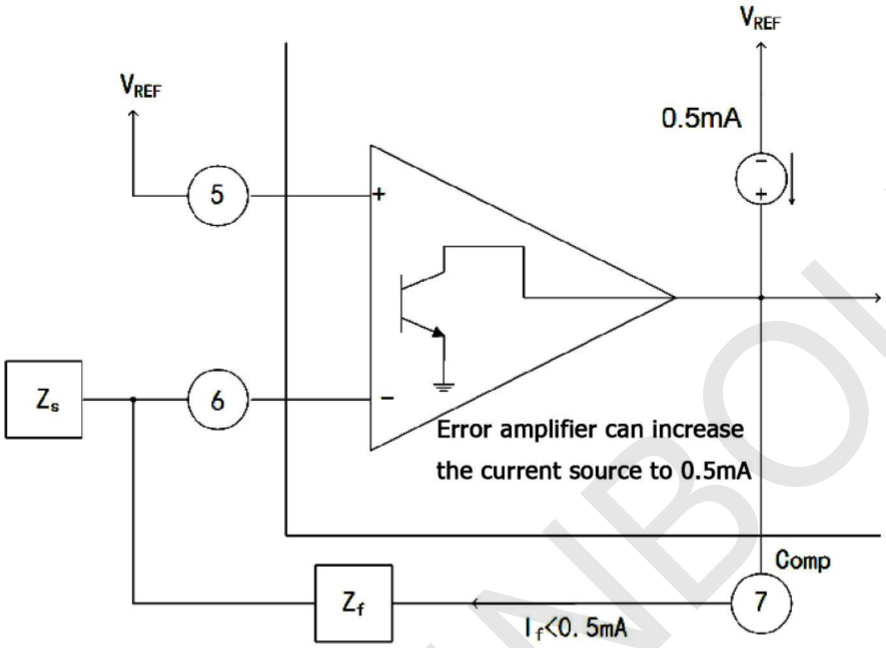

3.Parallel operating circuit

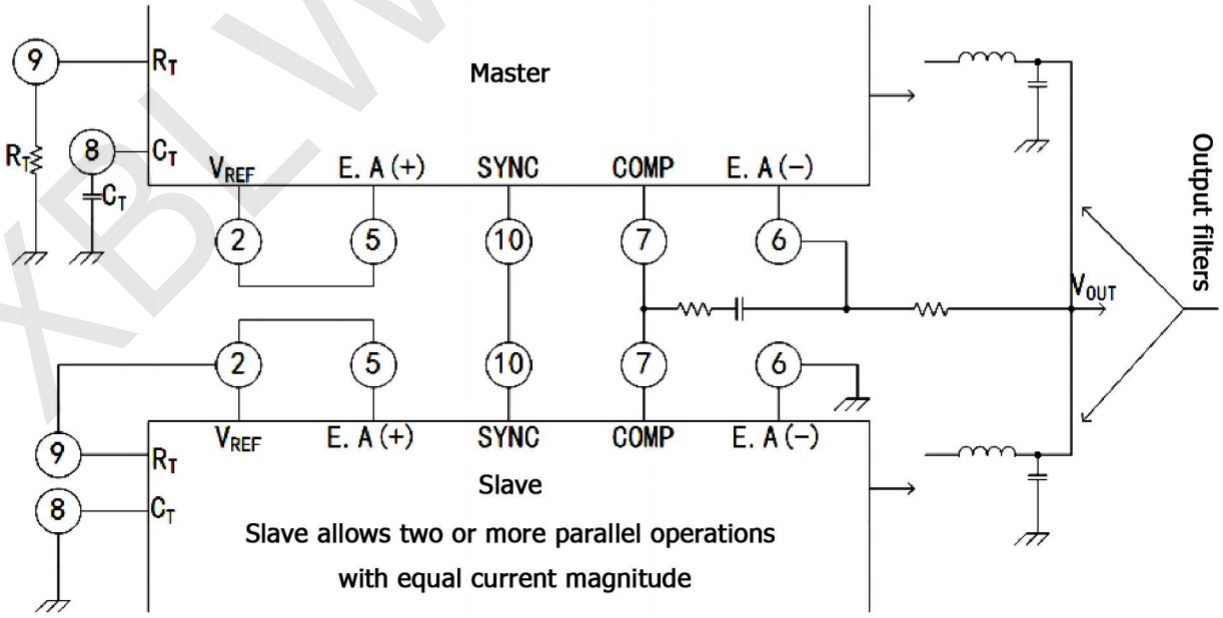

XBLW/XINBOLE

4. The current was limited one pulse at a time

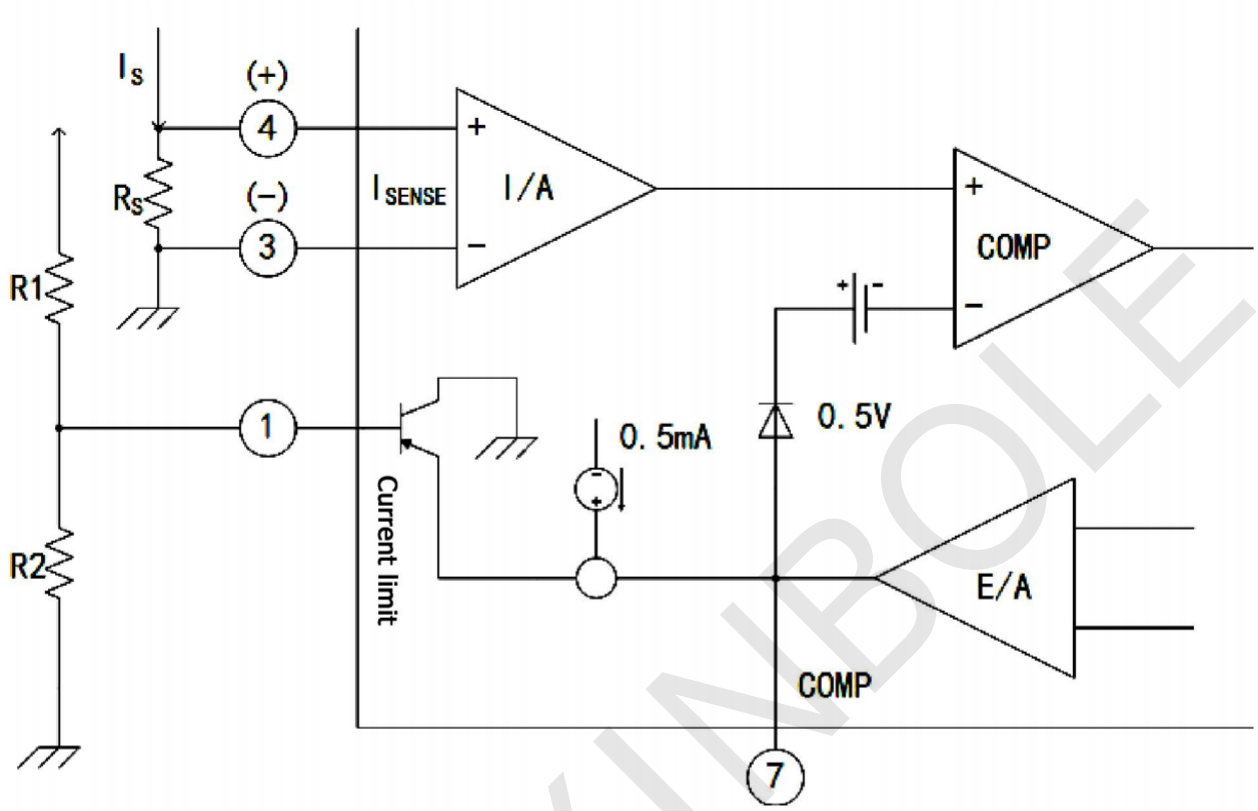

The magnitude of the peak current IS can be calculated by the following equation:

$I_S=[R_2*V_{REF}/(R_1+R_2)-0.5]/3R_S$

5. Current sensing amplifier connection circuit

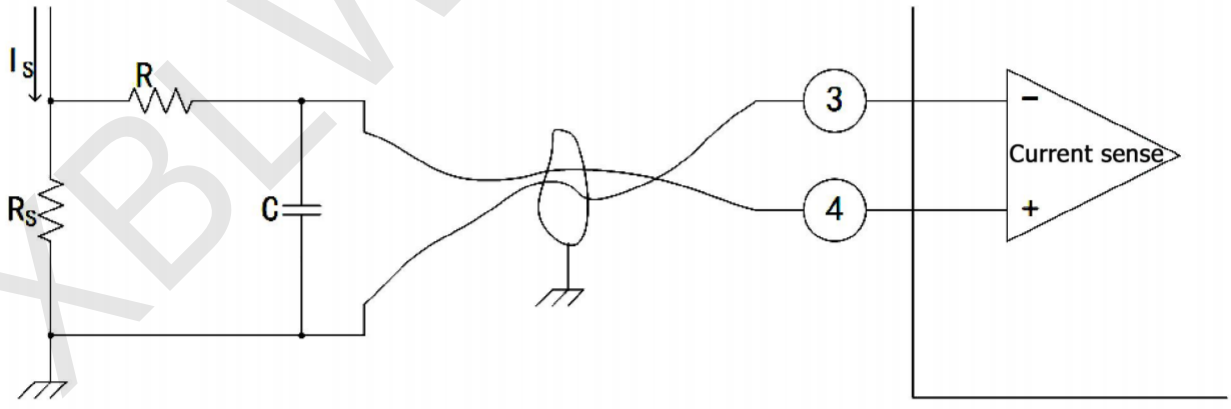

In some applications a small RC filter may be required to reduce the effects of switching transients. Differential inputs allow remote, noise-free sensing measurements.

XBLW/XINBOLE

· DIP-16

Size / Symbol	Dimensions In Millimeters		Size / Symbol	Dimensions In Inches	
	Min(mm)	Max(mm)		Min(in)	Max(in)
A	3.710	4.310	A	0.146	0.170
A1	0.510		A1	0.020	
A2	3.200	3.600	A2	0.126	0.142
B	0.380	0.570	B	0.015	0.022
B1	1.524(BSC)		B1	0.060(BSC)	
C	0.204	0.360	C	0.008	0.014
D	18.80	19.20	D	0.740	0.756
E	6.200	6.600	E	0.244	0.260
E1	7.320	7.920	E1	0.288	0.312
e	2.540(BSC)		e	0.100(BSC)	
L	3.000	3.600	L	0.118	0.142
E2	8.400	9.000	E2	0.331	0.354

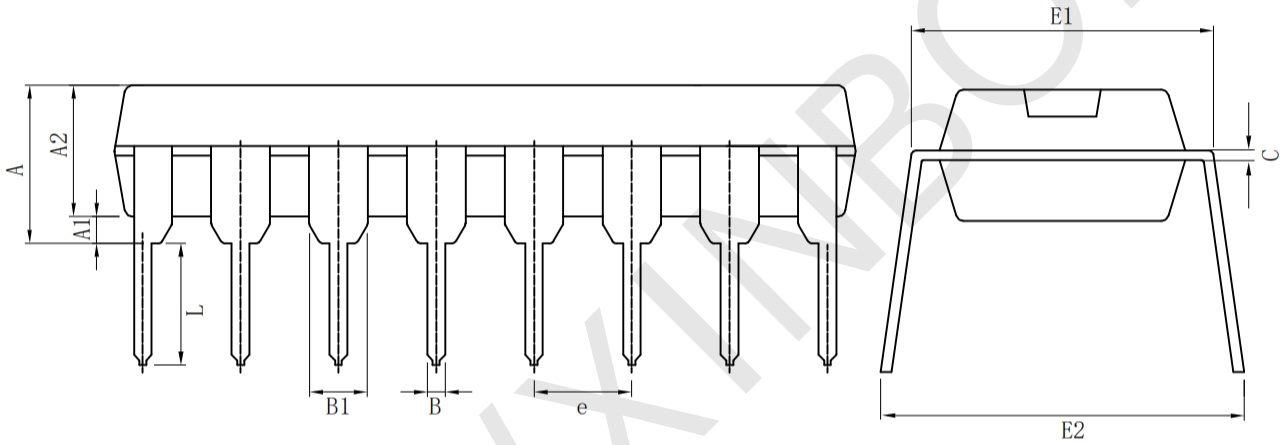

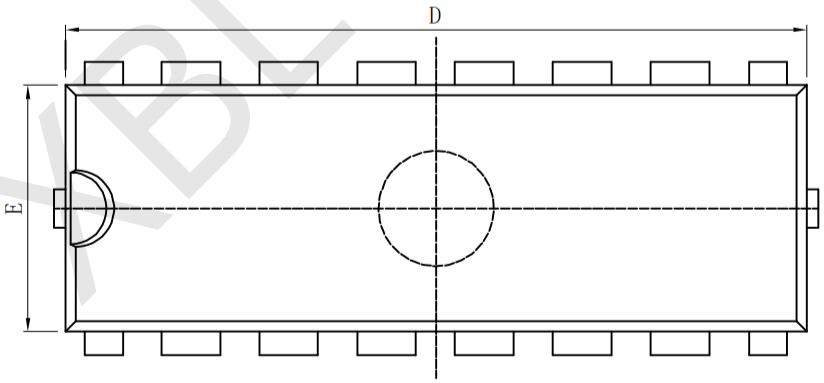

XBLW/XINBOLE

· SOP-16-300mil

Symbol \ Size	Dimensions In Millimeters		Symbol \ Size	Dimensions In Inches	
	Min(mm)	Max(mm)		Min(in)	Max(in)
A	2.650		A	0.100	
A1	0.100	0.300	A1	0.004	0.012
A2	2.250	2.450	A2	0.089	0.096
A3	0.250		A3	0.010	
bp	0.360	0.490	bp	0.014	0.019
c	0.230	0.320	c	0.009	0.013
D	10.10	10.50	D	0.400	0.410
E	7.400	7.600	E	0.290	0.300
e	1.270		e	0.050	
HE	10.00	10.65	HE	0.394	0.419
L	1.400		L	0.055	
Lp	0.400	1.100	Lp	0.016	0.043
Q	1.000	1.100	Q	0.039	0.043
v	0.250		v	0.010	
w	0.250		w	0.010	
y	0.100		y	0.004	
Z	0.400	0.900	Z	0.016	0.035
θ	0°	8°	θ	0°	8°

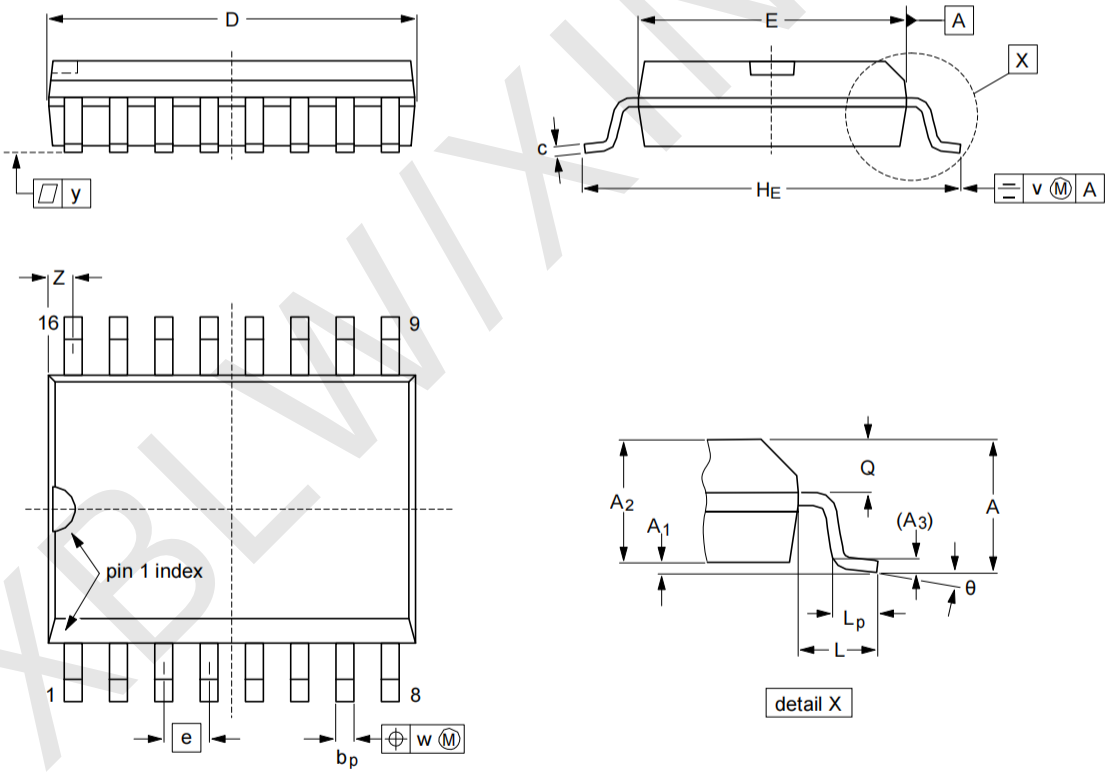

XBLW / XINBOLE

Statement:

- XBLW reserves the right to modify the product manual without prior notice! Before placing an order, customers need to confirm whether the obtained information is the latest version and verify the completeness of the relevant information.
- Any semi-guide product is subject to failure or malfunction under specified conditions. It is the buyer's responsibility to comply with safety standards when using XBLW products for system design and whole machine manufacturing. And take the appropriate safety measures to avoid the potential in the risk of loss of personal injury or loss of property situation!
- XBLW products have not been licensed for life support, military, and aerospace applications, and therefore XBLW is not responsible for any consequences arising from the use of this product in these areas.
- If any or all XBLW products (including technical data, services) described or contained in this document are subject to any applicable local export control laws and regulations, they may not be exported without an export license from the relevant authorities in accordance with such laws.
- The specifications of any and all XBLW products described or contained in this document specify the performance, characteristics, and functionality of said products in their standalone state, but do not guarantee the performance, characteristics, and functionality of said products installed in Customer's products or equipment. In order to verify symptoms and conditions that cannot be evaluated in a standalone device, the Customer should ultimately evaluate and test the device installed in the Customer's product device.
- XBLW documentation is only allowed to be copied without any alteration of the content and with the relevant authorization. XBLW assumes no responsibility or liability for altered documents.
- XBLW is committed to becoming the preferred semiconductor brand for customers, and XBLW will strive to provide customers with better performance and better quality products.

XBLW XINBOLE