REVISION RECORD				
REV	ECO	DESCRIPTION	DRFT	CHKD

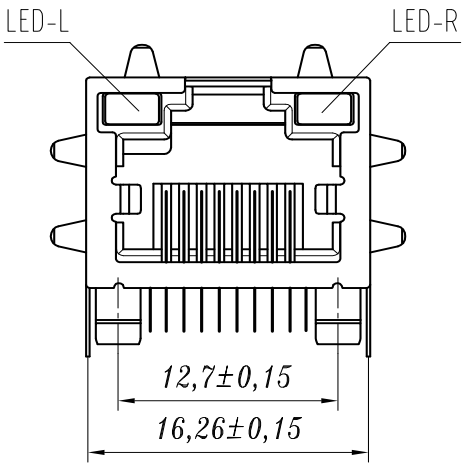

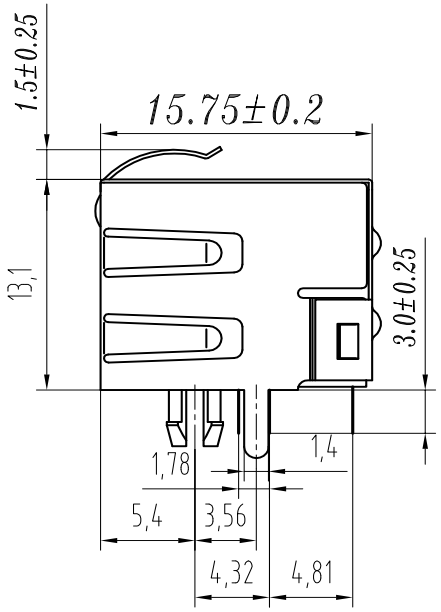

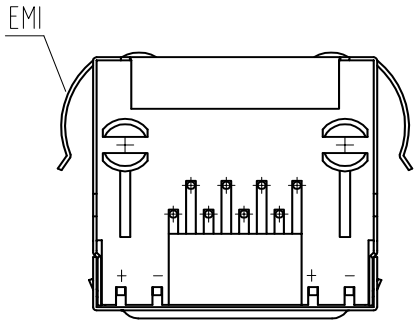

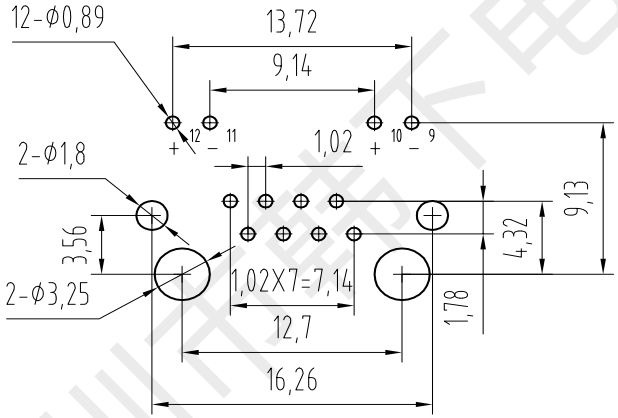

PC Board Layout

Component Side Shown

Specifications:

1. Electrical:
   - Rated voltage and current: 125V 1.5A Max
   - Contact resistance: 50mΩ Max Initial state
     100mΩ Max End state
   - Insulation resistance: 500MΩ Min
   - Withstand Voltage: AC 1000V
2. Mechanical:
   - Durability: 750 Cycles 20-30Cycles/Min
3. Matorial:
   - Shell: 0.20mm Thickness Coper Alloy With Nikel Plated
   - Housing: Glass Filled Polyester UL94V-0
   - Contact: Phosphor Bronze
   - Plating: Gold Plating Fu " 50u " Over Nickel
4. Temperature Range: -25℃ to +85℃.
5. Welding temperature: 260±5℃ 3±0.5S

MM (INCH)	DFTO 黄彬	DATE	深圳市韩下电子有限公司
TOLERANCES EXCEPT AS NOTED	CHKD 张伟	DATE	
MM .0 ± 0.15 .00 ± 0.075 .000 ± 0.05	MFG	DATE	TITLE: HX-RJ45 90 5631-1x1T LED
ANGLES ± 0.5	APPVL 罗小春	DATE	
THIRD ANGLE PROJECTION	MATERIAL :		DRAWING NO. TE5JA1002 /PART NO.
DETACHED LISTS	Q'TY :		SIZE A3 REV 0
	FINISH :		DO NOT SCALE DRAWING SHEET X OF Y
	SCALE :		

深圳市韩下电子有限公司

深圳市韩下电子有限公司
Shenzhen Hanxia Electronic Co., Ltd
Tel: 0755-23086569

承　认　书

SPECIFICATION FOR APPROVAL

产 品 编 码
Material code: _____

产品名称 Project：以太网连接器

规格型号 Part No：HX-RJ45 90 5631-1x1T LED

贵公司承认印 Approal slgnatures

料 号/Part No.	签　章/Signatures

日期 Date:

拟制/Drawn	黄彬	深圳市韩下电子有限公司 工程专用章
审核/Check	张伟	
批准/Approved	罗小春	

深圳市韩下电子有限公司