CUI Devices is now Same Sky! Learn More

same sky

Additional Resources: Product Page

MODEL: CMT-7525-03-SMT-TR | DESCRIPTION: MAGNETIC BUZZER TRANSDUCER

FEATURES

- magnetic
- no driving circuit
- surface mount



RoHS

SPECIFICATIONS

parameter	conditions/description	min	typ	max	units
rated voltage	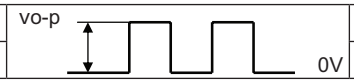		3		Vo-p
operating voltage		2.5		5	Vo-p
current consumption	at rated voltage, 2,731 Hz, ½ duty square wave			100	mA
rated frequency			2,731		Hz
sound pressure level	at 10 cm, rated voltage, 2,731 Hz, ½ duty square wave	80			dB
coil resistance		13	16	19	Ω
dimensions	7.5 x 7.5 x 2.5				mm
weight		0.25	0.30	0.35	g
material	LCP (UL94V-0)				
terminal	surface mount (tin plating)				
operating temperature		-40		80	°C
storage temperature		-40		80	°C
washable	no				
RoHS	yes				

Notes: 1. All specifications measured at 25±5°C, humidity at 35~70%, under 86~106 kPa pressure, unless otherwise noted.

SOLDERABILITY

parameter	conditions/description	min	typ	max	units
reel storage	at relative humidity <40%			25	°C
reflow soldering[2]	see recommended reflow soldering profile		260		°C
drying conditions[3]	bake at 40°C for 24 hours				

Note: 2. It is recommended to reflow solder within 48 hours from opening vacuum packaging at a temperature <30°C & relative humidity <60%. Not recommended to exceed 2 reflow cycles.
3. When out of packaging for more than 48 hours.

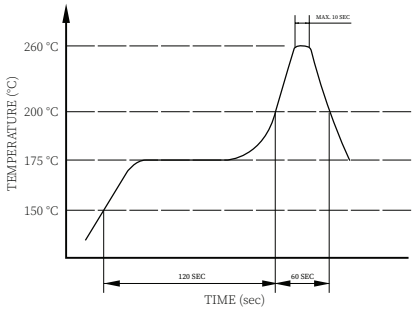

MECHANICAL DRAWING

units: mm
tolerance: ±0.5 mm

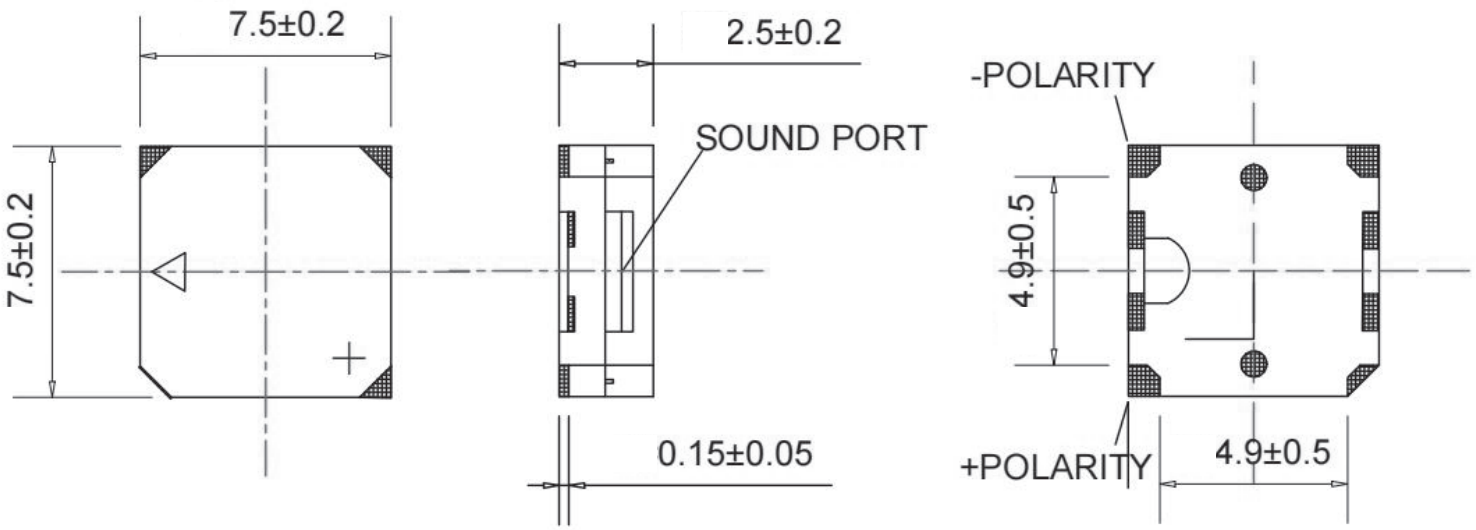

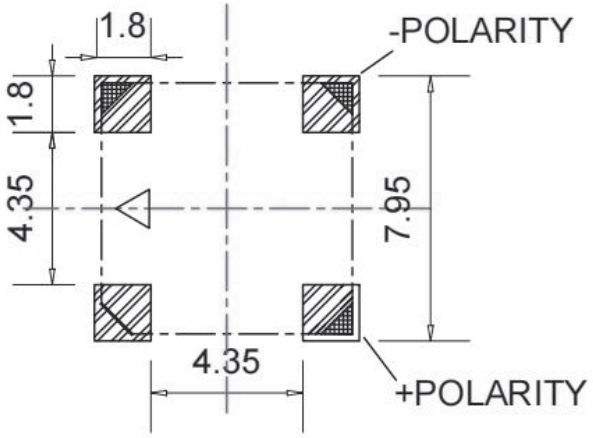

Recommended PCB Layout
Top View

FREQUENCY RESPONSE CURVE

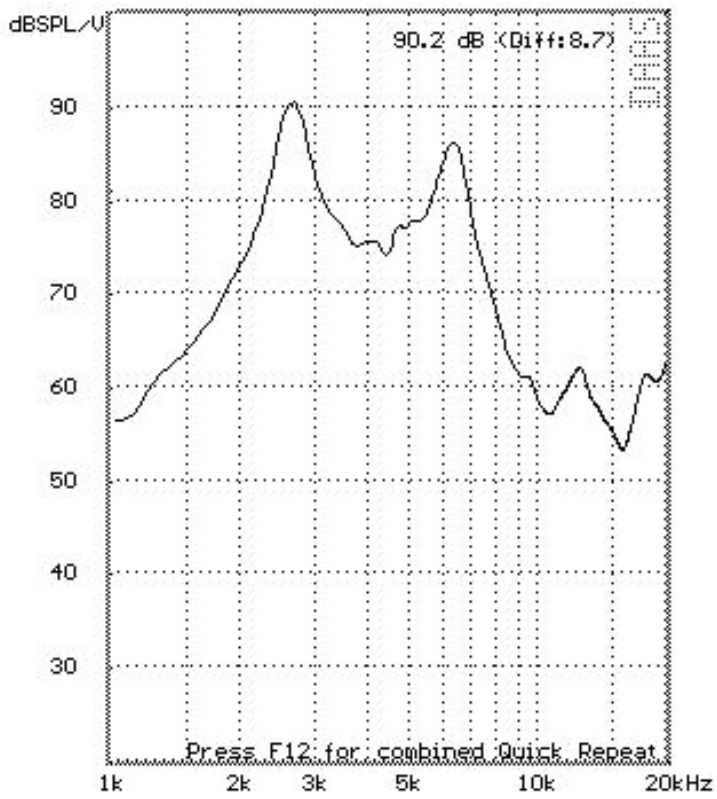

APPLICATION CIRCUIT

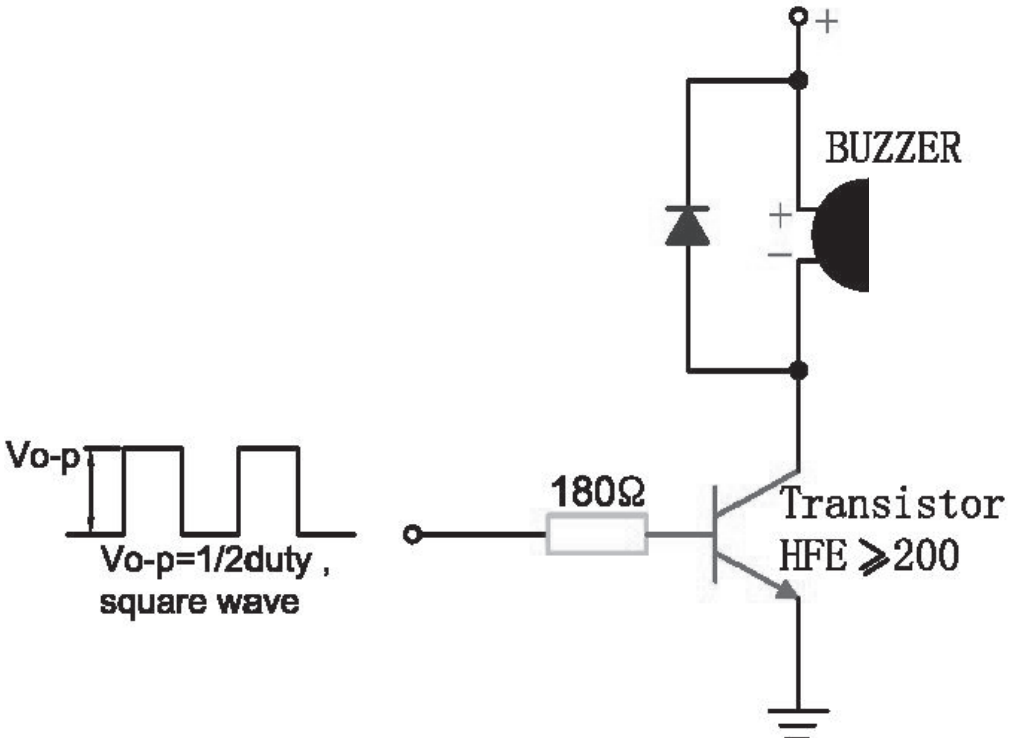

PACKAGING

units: mm

Reel Size: Ø330 mm
Reel QTY: 2,000 pcs per reel
Carton Size: 370 x 350 x 350 mm
Carton QTY: 20,000 pcs per carton

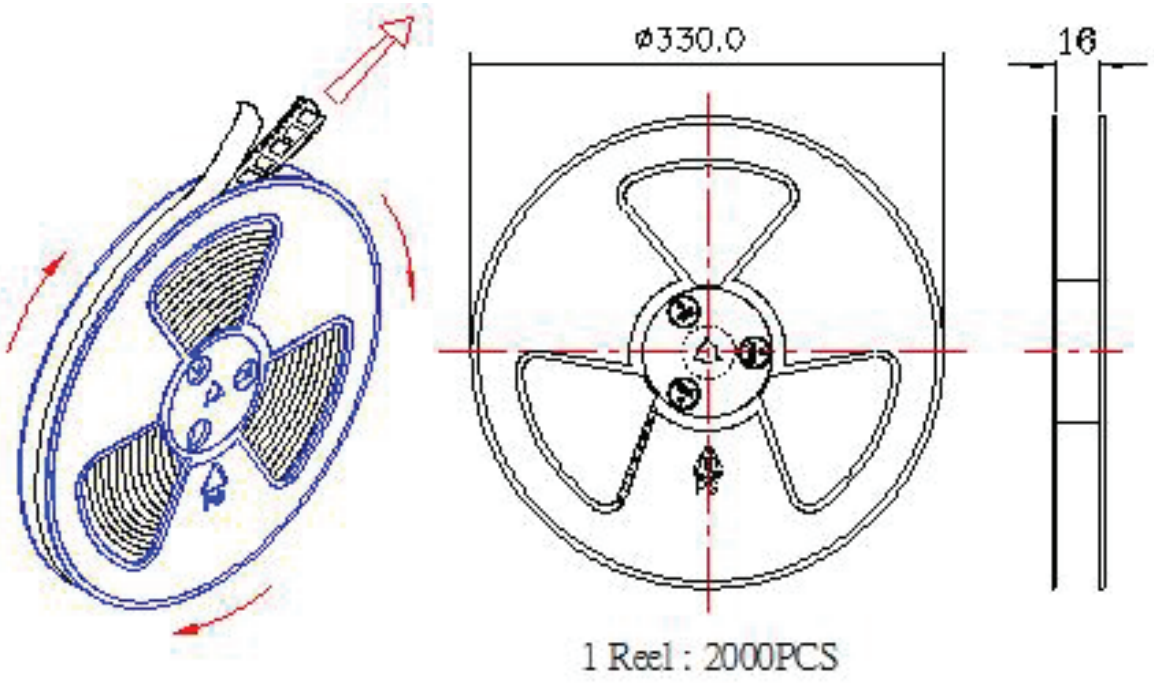

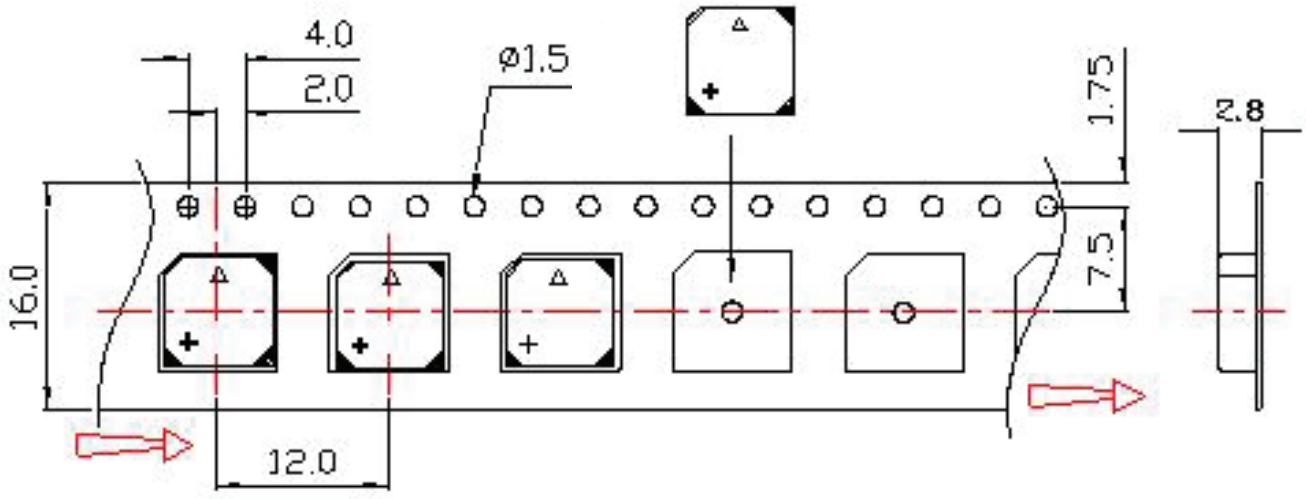

REVISION HISTORY

rev.	description	date
1.0	initial release	09/12/2024

The revision history provided is for informational purposes only and is believed to be accurate.

same sky

Same Sky offers a one (1) year limited warranty. Complete warranty information is listed on our website.

Same Sky reserves the right to make changes to the product at any time without notice. Information provided by Same Sky is believed to be accurate and reliable. However, no responsibility is assumed by Same Sky for its use, nor for any infringements of patents or other rights of third parties which may result from its use.

Same Sky products are not authorized or warranted for use as critical components in equipment that requires an extremely high level of reliability. A critical component is any component of a life support device or system whose failure to perform can be reasonably expected to cause the failure of the life support device or system, or to affect its safety or effectiveness.

sameskydevices.com

Unikeyic Electronics

Global Electronic Components Distributor

Click to view pricing, inventory, delivery, and lifecycle information:

Same Sky:

PJ-047BH PR4-5V-450-1A CFM-2507CF-0140-313 CFM-6015V-239-292-20 CMM-2718AT-42316-TR CMP-5247TF-K CPI-1375IC-80T PJ-067B TBL004V-508-02BE-2GY TBP02P1-381-10BE CBT-09427-SMT-TR HSE-B20350-NP PJ-202AH CFM-A238BF-270-651 SJ1-3535N TBP01R1-508-14BE CDM1222-12A-FW-F16-050-67 CMC-5042PF-AC DS01C-254-S-03BE SJ-43516-SMT-TR-PI TB007-508-02BE CMI-9653S-SMT-TR CPM-2H CMA-4544PF-W SJ-2523-SMT-TR CFM-2510B-0130-275 CPT-1117-83-SMT-TR PJ-058AH UJ32-C-H-G-L1-MSMT-TR DS04-254-2-02BK-SMT