BZX55C Series

Zener Diodes

V_Z : 2.0 - 100 Volts
P_D : 500 mWatts



DO-35(GLASS)

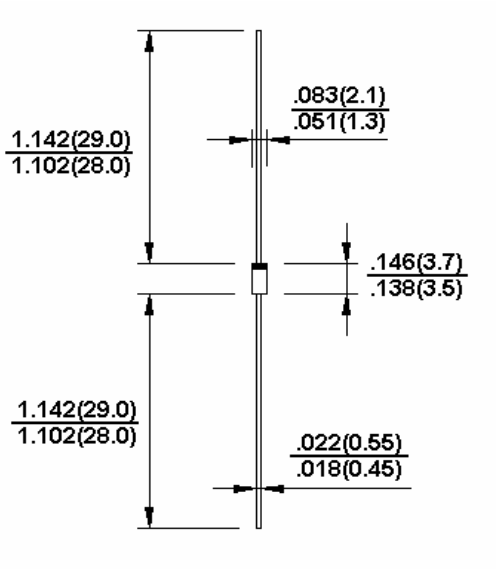

Dimensions in inches and (millimeters)

Features

- ✧ Zener Voltage range 2.0 to 100 volts
- ✧ DO-35 package (JEDEC)
- ✧ Through-hole device type mounting
- ✧ Hermetically sealed glass
- ✧ Compression bonded construction
- ✧ All external surfaces are corrosion resistant and leads are readily solderable
- ✧ RoHS compliant
- ✧ Solder hot dip Tin(Sn) lead finish
- ✧ Cathode indicated by polarity band

Maximum Ratings and Electrical Characteristics

Rating at 25 °C ambient temperature unless otherwise specified.

Maximum Ratings

Type Number	Symbol	Value	Units
Power Dissipation	Pd	500	mW
Maximum Forward Voltage @ IF = 100mA	V_F	1.0	V
Storage Temperature Range	T_{STG}	-65 to + 200	°C
Operating Junction Temperature	T_J	+ 200	°C

These ratings are limiting values above which the serviceability of the diode may be impaired.

BZX55C Series

Zener Diodes

ELECTRICAL CHARACTERISTICS (TA=25°C unless otherwise noted)

PART NUMBER	ZENER VOLTAGE RANGE(1) at I_{ZT}		TEST CURRENT	MAXIMUM DYNAMIC RESISTANCE		TEST CURRENT	EFFECTIVE TEMP. COEFFICIENT		REVERSE CURRENT	REVERSE VOLTAGE
	V_Z(V)		I_{ZT}	@I_{ZT}	@Izk	I_{ZK}	%/℃		I_R	V_R
	Min	Max	mA	OHMS	OHMS	mA	Min	Max	nA	V
BZX55C2V0	1.9	2.1	5	100	600	1	-0.09	-0.06	150000	1
BZX55C2V2	2.09	2.31	5	100	600	1	-0.09	-0.06	150000	1
BZX55C2V4	2.28	2.56	5	85	600	1	-0.09	-0.06	50000	1
BZX55C2V7	2.5	2.9	5	85	600	1	-0.09	-0.06	10000	1
BZX55C3V0	2.8	3.2	5	85	600	1	-0.08	-0.05	4000	1
BZX55C3V3	3.1	3.5	5	85	600	1	-0.08	-0.05	2000	1
BZX55C3V6	3.4	3.8	5	85	600	1	-0.08	-0.05	2000	1
BZX55C3V9	3.7	4.1	5	85	600	1	-0.08	-0.05	2000	1
BZX55C4V3	4	4.6	5	75	600	1	-0.06	-0.03	1000	1
BZX55C4V7	4.4	5	5	60	600	1	-0.05	0.02	500	1
BZX55C5V1	4.8	5.4	5	35	550	1	-0.02	0.02	100	1
BZX55C5V6	5.2	6	5	25	450	1	-0.05	0.05	100	1
BZX55C6V2	5.8	6.6	5	10	200	1	0.03	0.06	100	2
BZX55C6V8	6.4	7.2	5	8	150	1	0.03	0.07	100	3
BZX55C7V5	7	7.9	5	7	50	1	0.03	0.07	100	5
BZX55C8V2	7.7	8.7	5	7	50	1	0.03	0.08	100	6.2
BZX55C9V1	8.5	9.6	5	10	50	1	0.03	0.09	100	6.8
BZX55C10	9.4	10.6	5	15	70	1	0.03	0.11	100	7.5
BZX55C11	10.4	11.6	5	20	70	1	0.03	0.11	100	8.2
BZX55C12	11.4	12.7	5	20	90	1	0.03	0.11	100	9.1
BZX55C13	12.4	14.1	5	26	110	1	0.03	0.11	100	10
BZX55C15	13.8	15.6	5	30	110	1	0.03	0.11	100	11
BZX55C16	15.3	17.1	5	40	170	1	0.03	0.11	100	12
BZX55C18	16.8	19.1	5	40	170	1	0.03	0.11	100	13
BZX55C20	18.8	21.2	5	55	220	1	0.03	0.11	100	15
BZX55C22	20.8	23.3	5	55	220	1	0.03	0.11	100	16
BZX55C24	22.8	25.6	5	80	220	1	0.04	0.12	100	18
BZX55C27	25.1	28.9	5	80	220	1	0.04	0.12	100	20
BZX55C30	28	32	5	80	220	1	0.04	0.12	100	22
BZX55C33	31	35	5	80	220	1	0.04	0.12	100	24
BZX55C36	34	38	5	80	220	0.5	0.04	0.12	100	27
BZX55C39	37	41	2.5	90	500	0.5	0.04	0.12	100	30
BZX55C43	40	46	2.5	90	600	0.5	0.04	0.12	100	33
BZX55C47	44	50	2.5	110	700	0.5	0.04	0.12	100	36
BZX55C51	48	54	2.5	125	700	0.5	0.04	0.12	100	39
BZX55C56	52	60	2.5	135	1000	0.5	0.04	0.12	100	43
BZX55C62	58	66	2.5	150	1000	0.5	0.04	0.12	100	47
BZX55C68	64	72	2.5	200	1000	0.5	0.04	0.12	100	51
BZX55C75	70	79	2.5	250	1500	0.5	0.04	0.12	100	56
BZX55C82	77	87	2.5	300	2000	0.5	0.04	0.12	100	62
BZX55C91	85	96	2.5	450	5000	0.1	0.04	0.12	100	68
BZX55C100	94	106	2.5	450	5000	0.1	0.04	0.12	100	75

Notes:

1. Tolerance and voltage designation: the type numbers listed have zener voltage as shown. Measured with pulses tp=5.0ms, BZX55B------±2% of V_{Znom}, BZX55C------±5% of V_{Znom}.

2. Specials available include: nominal zener voltages between the voltages shown and tighter voltage, for detailed information on price, availability and delivery.

3. Zener voltage (V_Z) measurement: the zener voltage is measured under pulse conditions such that T_J is more than 2°C above T_A.

4. Zener impedance (Z_Z) derivation: zener impedance is derived from the 60-cycle ac voltage, which results when an ac current having an RMS value equal to 10% of the dc zener current (I_{ZT}) is superimposed to IZT.

PACKAGE	SPQ/PCS	CARTON SPQ/PCS	CARTON SIZE/CM	CARTON GW/KG	CARTON NW/KG
DO-35	5000/AMMO	100000	41X28.5X38	14.57	13.07