SOD323 1-Line Unidirectional ESD Protection Diode

General description

These surge protection diodes are designed for applications requiring transient overvoltage protection capability. They are intended for use in voltage and ESD sensitive equipment such as computers,printers,business machines, communication systems, medical equipment and other applications. These devies are ideal for situations where board space is at a premium.

Features and benefits

- Unidirectional ESD protection of one line
- Reverse stand-off voltage: 4.5V Max
- Low leakage current: nA Level
- Response time is typically < 1 ns
- ESD Protection: 30kV(air)/ 30kV(contact) (IEC61000-4-2)
- IEC61000-4-5 (Lightning) 170A (8/20us)
- RoHS compliant



SOD323

Application information

- Cell Phone Handsets and Accessories
- Microprocessor based equipment
- Personal Digital Assistants (PDA's)
- Notebooks,Desktops,and Servers

Ordering information

Marking	Graphic symbol
45A	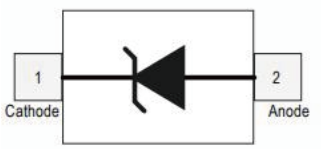

Ordering information

Device	Package	Reel Size	Qty(PCS)
PESD5V0S1UA	SOD323	7 Inch	3000

Electrical Characteristics (T_A = 25 °C, unless otherwise specified)

Parameter	Symbol	Min	Typ	Max	Unit	Condition
Reverse Working Voltage	V_{RWM}	--	--	4.5	V	
Breakdown Voltage	V_{BR}	5.0	5.8	6.8	V	I_T=1mA
Leakage Current ILeak	I_R	--	--	100	nA	V_{RWM}=4.5V
Clamping Voltage	V_C	--	14.0	15.3	V	I_{PP}=170A,Tp=8/20μs
Junction Capacitance	C_J	--	450	500	pF	V_R=0V, f=1MHz
Forward Voltage	V_F	0.6	0.84	1.0	V	I_F=10mA

Maximum Ratings (T_A = 25 °C, unless otherwise specified)

Parameter	Symbol	Value	Unit
Peak Pulse Power (tp = 8/20μs)	P_{PPM}	2600	W
Peak Pulse Current(tp = 8/20μs)	I_{PPM}	170	A
Maximum lead temperature for soldering during 10s	T_L	260	°C
Storage Temperature Range	T_{stg}	-55 to +150	°C
Operating Temperature Range	T_{OP}	-40 to +125	°C
ESD voltage IEC 61000-4-2 (air discharge)	V_{ESD}	30	kV
ESD voltage IEC 61000-4-2 (contact discharge)	V_{ESD}	30	kV

Portion Electronics Parameter

Symbol	Parameter
I_{PPM}	Maximum Reverse Peak Pulse Current
V_C	Clamping Voltage @ I_{PP}
V_{RWM}	Working Peak Reverse Voltage
I_R	Reverse Leakage Current @ V_{RWM}
I_T	Test Current
V_{BR}	Breakdown Voltage @ I_T
I_F	Forward Current
V_F	Forward Voltage @ I_F

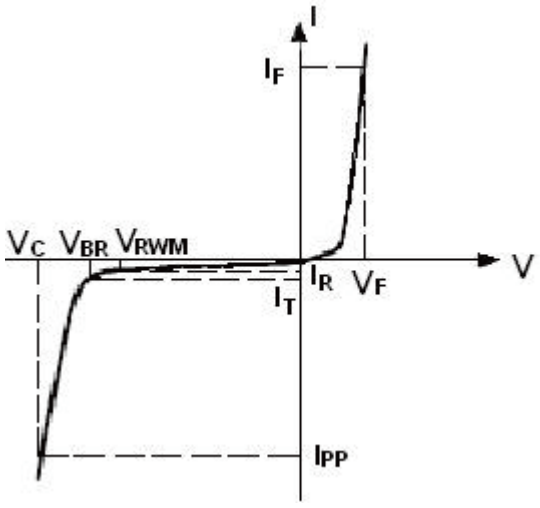

Typical Characteristics

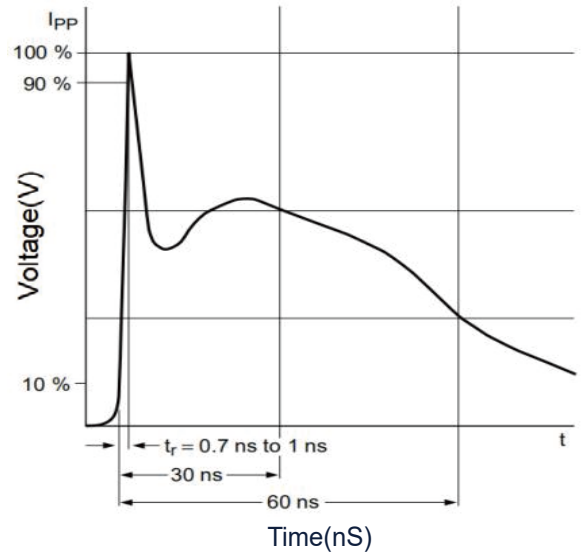

IEC61000−4−2 Waveform

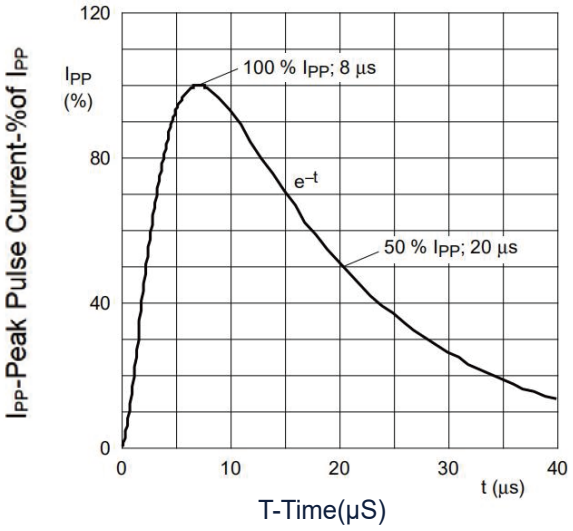

IEC 61000-4-5 Waveform(8/20µs pulse)

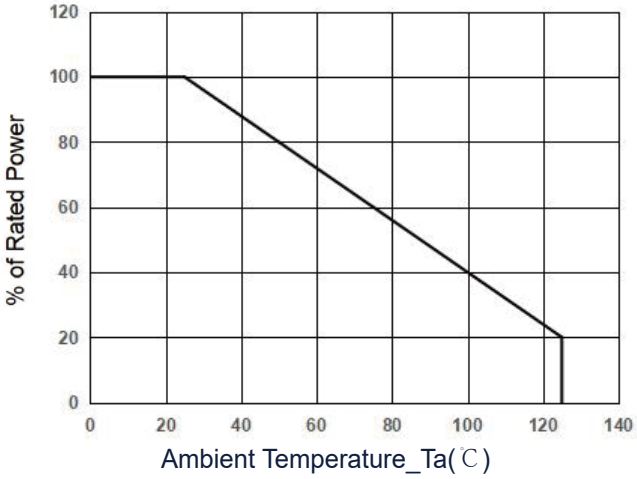

Power Derating Curve

Package Outline Dimensions

SOD323

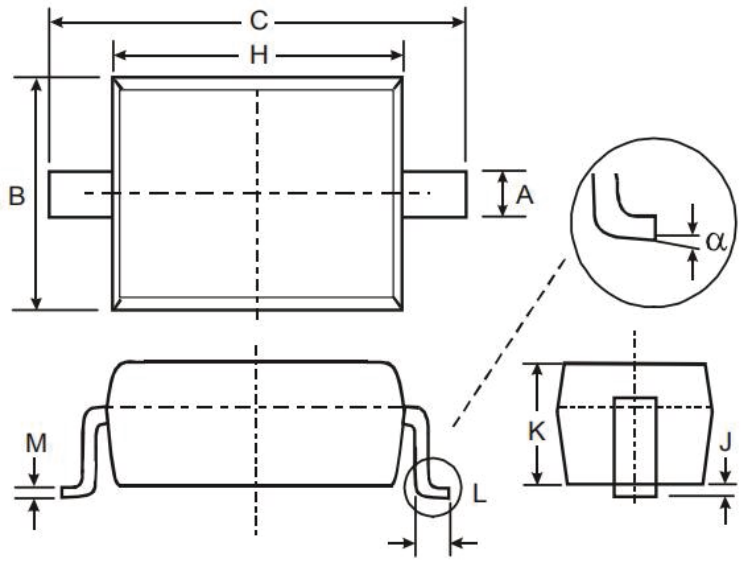

SYMBOL	MILLIMETERS	
	MIN	MAX
A	0.25	0.35
B	1.20	1.40
C	2.40	2.70
H	1.60	1.80
J	0.01	0.15
K	0.80	1.00
L	0.20	0.40
M	0.08	0.15
α	0°	8°

Soldering Footprint (mm)

