RoHS

REV.	ECN. #	DESCRIPTION	NAME	DATE
A0	———	NEW RELEASE	X. F. Wang	2023. 05. 12

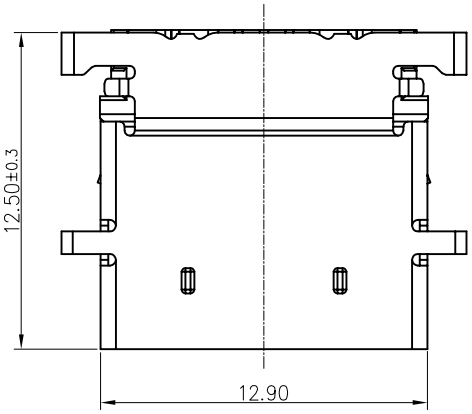

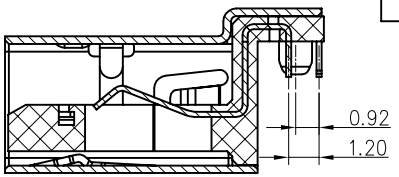

SECTION: A–A

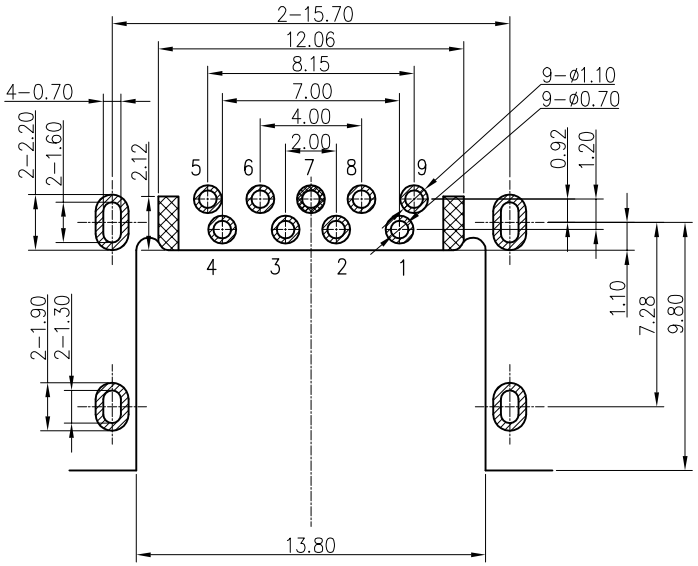

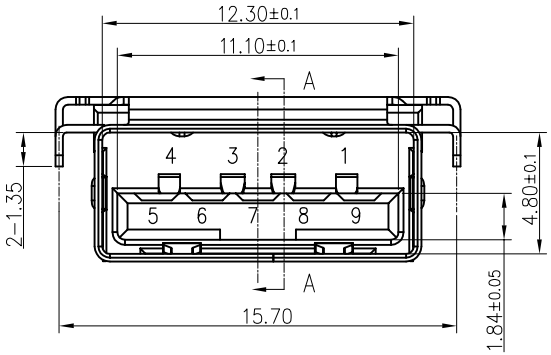

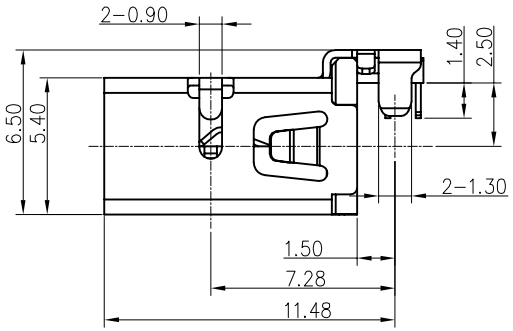

TOLERANCE: ±0.05, THICKNESS: 1.0~1.2mm

RECOMMENDED PCB LAYOUT

(TOP VIEW)

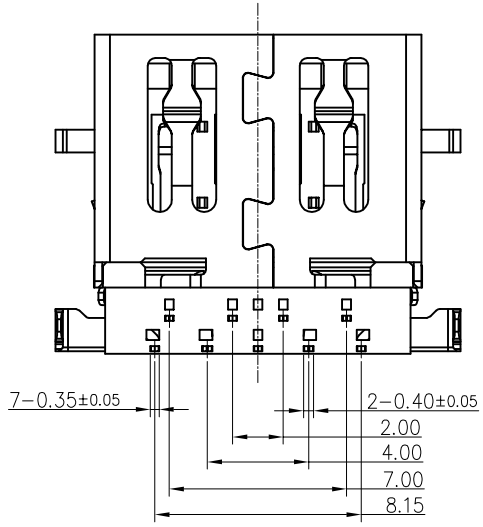

NOTE:

1.MATERIAL:
- 1.1 HOUSING: LCP UL94V-0.
- 1.2 CONTACT: COPPER ALLOY T=0.20mm
- 1.3 SHELL: STAINLESS STEEL T=0.30mm

2.ELECTRICAL CHARACTERISTICS:
- 2.1 CONTACT RESISTANCE: 30mΩ Max
- 2.2 CONTACT CURRENT RATING: 1.5A
- 2.3 DIELECTRIC WITHSTANDING VOLTAGE: 100V AC R.M.S.
- 2.4 INSULATION RESISTANCE 100MΩ Min
- 2.5 OPERATING TEMPEROTURE: -40°C~75°C
- 2.6 RATE VOLTAGE: 30V DC

3 MECHANICAL CHARACTERISTICS:
- 3.1 INSERTION FORCE: 35N Max
- 3.2 EXTRACTION FORCE: INITIAL 10N Min, AFTER TEST 8N Min
- 3.3 DURABILITY: 5000 CYCLES

4.PLATING:
- 4.1 TERMINAL CONTACT: G/F(0.8u" Au) PLATING ON CONTACT AREA
  80u"MIN Matte Tin PLATED ON SOLDER AREA
  30u" MIN. Ni UNDERPLATED OVERALL
- 4.2 SHELL: 50u"MIN. NICKEL ALL OVER

5.SALT SPRAY: 24H

104629452-X

H:BLACK HOUSING
L:BLUE HOUSING

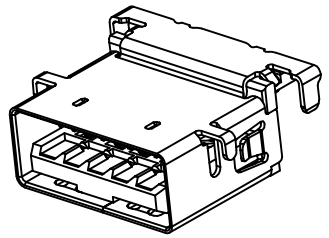

3D VIEW

PIN NO.	1	2	3	4
SIGNAL NAME	VBUS	D–	D+	GND
REMARK	USB2.0 CONTACT PIN			
PIN NO.	5	6	7	8	9
SIGNAL NAME	SSRX–	SSRX+	GND	SSTX–	SSTX+
REMARK	USB3.0 CONTACT PIN				

MILLIMETERS		INCH	
X. °	±2°	X. °	±2°
. X	±0.30	. X	±0.012
. XX	±0.20	. XX	±0.008
. XXX	±0.10	. XXX	±0.004

THESE DRAWINGS AND SPECIFICATIONS ARE THE PROPERTY OF DongGuan JinBiLai Metal Plastic Technology Co., Ltd COPIED OR USED IN ANY MANNER WITHOUT THE PRIOR WRITTEN CONSENT OF DongGuan JinBiLai Metal Plastic Technology Co.,Ltd

东莞市金比莱五金塑胶科技有限公司

DongGuan JinBiLai Metal Plastic TechnologyCo,.Ltd

TITLE	USB3.1 AF H=6.5反向沉板CH2.50				DR	
PART NO.	104629452-X				CHKD	
PRO J.	PAGE	1/2	UNITS	mm	APPD	
	SIZE	A4	SCALE	1:1	DIS NO.	UB012-020-X客户图

ROHS

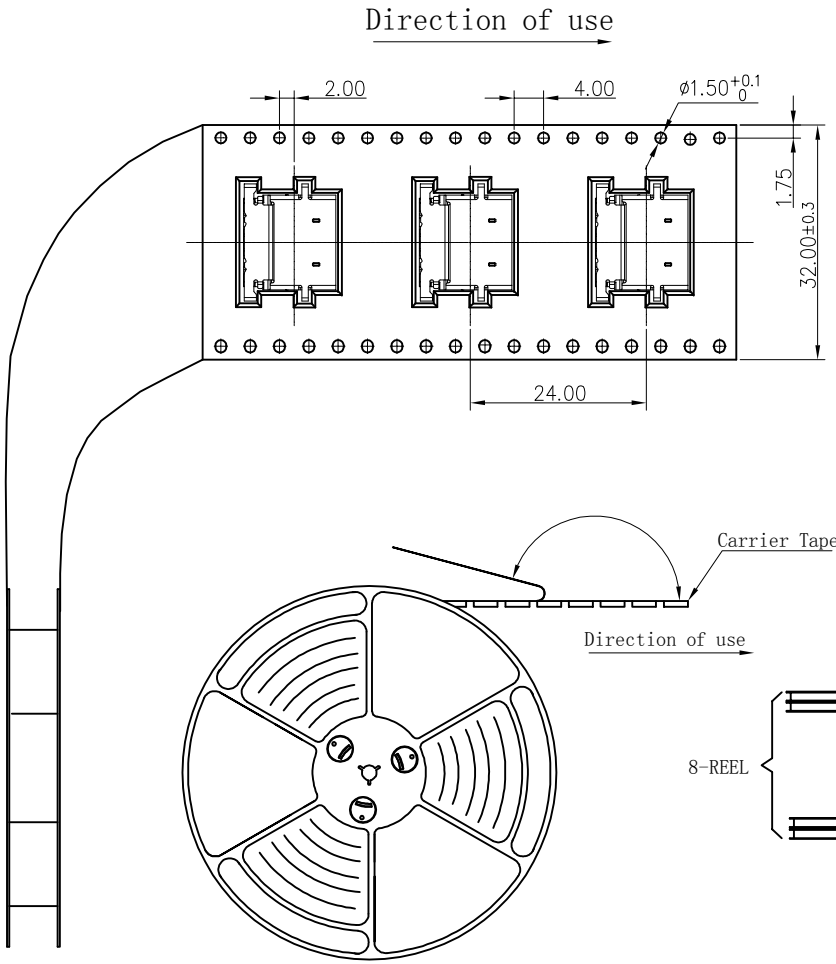

NOTES:

1、Packing quantity per plate: 400PCS/Plate

2、Loading and packing method

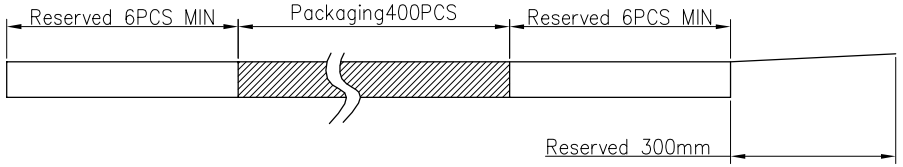

3、Total packaging:3200PCS/Box

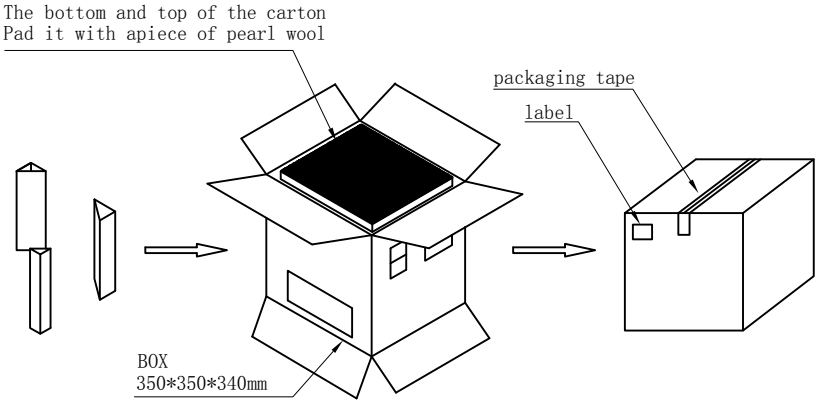

Part Number	Description	Quantity
303020191	Carrierband (Lucent, PET W=32 PH=24)	79.1M
303040009	Box (K=K,T=7.0,350*350*340)	1PCS
303060001	PE Bag (T=0.08mm, 730*760*730)	1PCS
303070014	Self-adhesive (W=25.50)	81.5M
303110001	Beam (K=K, T=7.0,95*95*290)	4PCS
303130001	Pearl Wool (340*340*18)	2PCS
303180021	REEL (BLUE, 13Inches*32mm, ф330)	8PCS
104629452-X	USB3.1 AF H=6.5反向沉板CH2.50	3200PCS

MILLIMETERS		INCH	
X.°	±2°	X.°	±2°
.X	±0.30	.X	±0.012
.XX	±0.20	.XX	±0.008
.XXX	±0.10	.XXX	±0.004

THESE DRAWINGS AND SPECIFICATIONS ARE THE PROPERTY OF DongGuan JinBiLai Metal Plastic Technology Co., Ltd COPIED OR USED IN ANY MANNER WITHOUT THE PRIOR WRITTEN CONSENT OF DongGuan JinBiLai Metal Plastic Technology Co.,Ltd

东莞市金比莱五金塑胶科技有限公司

DongGuan JinBiLai Metal Plastic TechnologyCo,.Ltd

TITLE	USB3.1 AF H=6.5反向沉板CH2.50				DR	
PART NUM.	104629452-X				CHKD	
PRO J.	PAGE	2/2	UNITS	mm	APPD	
	SIZE	A4	SCALE	1:1	DIS NO.	UB012-020-X客户图