REVISIONS					
REV	ECO	DESCRIPTION	DATE	BY	APPR
A1	-	RELEASE NUMBER	30/AUG/23	HARRIS	TOMMY

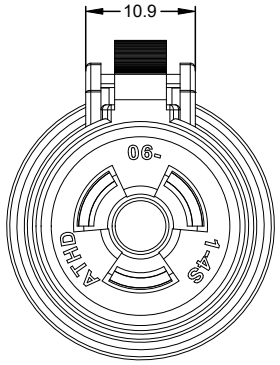

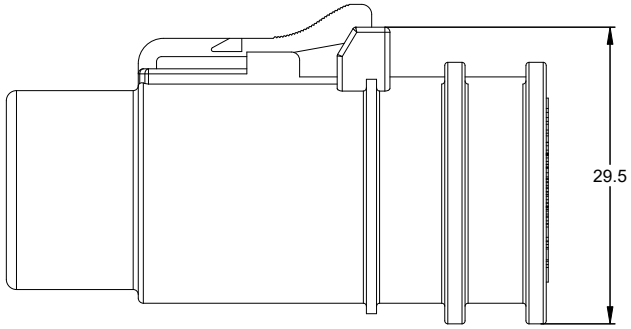

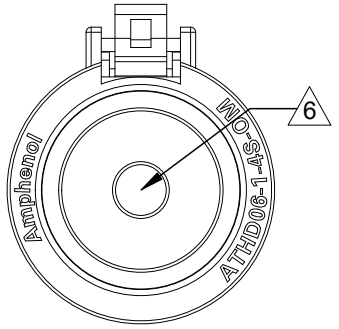

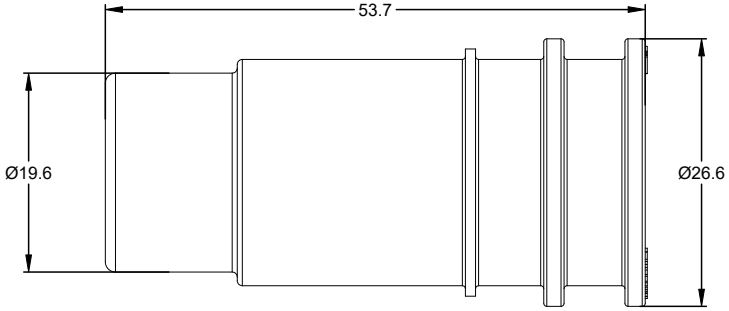

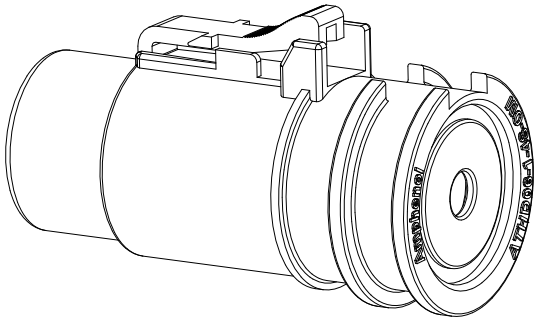

NOTES: UNLESS OTHERWISE SPECIFIED

1. MATERIAL:
   HOUSING: THERMOPLASTIC; COLOR: BLACK
   SEAL: SILICONE RUBBER

2. MODIFICATIONS: FOR OVER MOLDING

3. SPECIFICATIONS:
   3.1 CURRENT RATING: 100 AMPS
   3.2 OPERATING TEMPERATURE: -55°C TO +125°C
   3.3 DIELECTRIC WITHSTANDING VOLTAGE: LESS THAN 2 MILLIAMPS CURRENT LEAKAGE @ 1500 VOLTS AC.
   3.4 INSULATION RESISTANCE: 1000 MEGOHMS MIN @ 25°C.
   3.5 MOISTURE RESISTANCE: IP67&IP69K (MATED CONDITION)
   3.6 MATING CYCLE DURABILITY: 100 CYCLES
   3.7 RoHS COMPLIANT

4. MATING PART:ATHD04-1-4P* RECEPTACLE
   (* = MODIFICATIONS)

5. ALL DIMENSIONS ARE FOR REFERENCE USE ONLY.

△6 CONTACT SIZE AND REAR SEAL WIRE RANGE:

CONTACT SIZE	MIN. INSUL O.D.	MAX. INSUL O.D.	TYPICAL WIRE RANGE
04	6.63 mm (.261 in)	7.42 mm (.292 in)	6AWG (16-13 mm²)

	ATHD06-1-4S-OM		
	PART NUMBER	DESCRIPTION	ITEM
QUANTITY	MATERIALS LIST		

UNLESS OTHERWISE SPECIFIED
1) All dimensions are in metric(mm).
2) Tolerances are as follows:
1 PL DEC ±0.30 | Fractions ±1/64
2 PL DEC ±0.15 | Angles ±1°
3 PL DEC ±0.08
3) Note reference = △x

MATERIAL SPECIFICATIONS:

PROCESS SPECIFICATIONS:

NEXT ASS'Y:

SIGNATURES		DATE
DRAWN:	HARRIS	14/AUG/23
CHECKED:	ORION	15/AUG/23
ENGINEER:		
APPROVAL:	TOMMY	16/AUG/23
CUSTOMER:		

THIS DRAWING IS SUPPLIED FOR INFORMATION ONLY. DESIGN FEATURES, SPECIFICATIONS AND PERFORMANCE DATA SHOWN HEREON ARE THE PROPERTY OF THE AMPHENOL CORPORATION. NO RIGHTS OF REPRODUCTION ARE IMPLIED. ALL DIMENSIONS ARE SUBJECT TO NORMAL MANUFACTURING VARIATIONS.

Amphenol

Sine Systems - www.amphenol-sine.com
44724 Morley Drive
Clinton Township, MI 48036

1 POS, PLUG, SOCKET, STRUCTURE PLUS™ ATHD, SIZE 4, BLACK

SIZE	TYPE	DWG NO:	REVISION
B	C-	ATHD06-1-4S-OM	A1

SCALE: NONE SHEET 1 OF 1

TITLE: 1 POS, PLUG, SOCKET, STRUCTURE PLUS™ ATHD, SIZE 4, BLACK
DWG NO: ATHD06-1-4S-OM
REV: A1
SH: 1
OF: 1

Unikeyic Electronics

Global Electronic Components Distributor

Click to view pricing, inventory, delivery, and lifecycle information:

Amphenol:

68002116HLF 91614-403ALF 86093968191755E3LF DAPO15S365TLF 95157-140LF 86093488314745V1LF 68000-236HLF 76384-316LF 86093967896755LF 86093968813H45V1LF 67996-204HLF 68001-200HLF 70430-164LF CD15S13E4RV09LF LD25S33E4GV00LF 54202-S08-07LF 65781-158 70234-112LF D15P13A6RV12LF 69192-408HLF 70218-1116LF 863013A RJSBE5080C2 LD15P33E4GV00LF 54202-G0805CLF 68001-108HLF 86130202123355E1LF RJE061661210 DCMF37P DEM09P032N