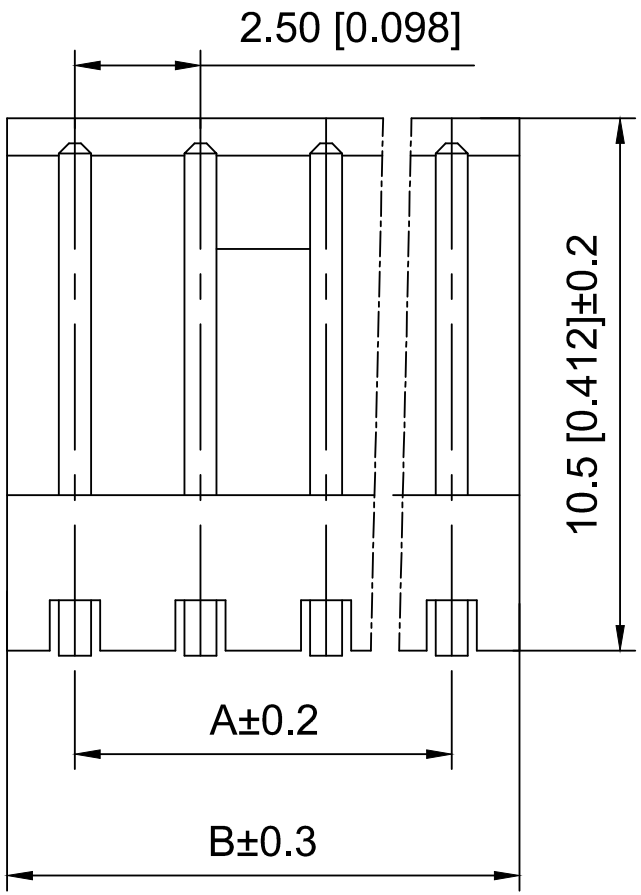

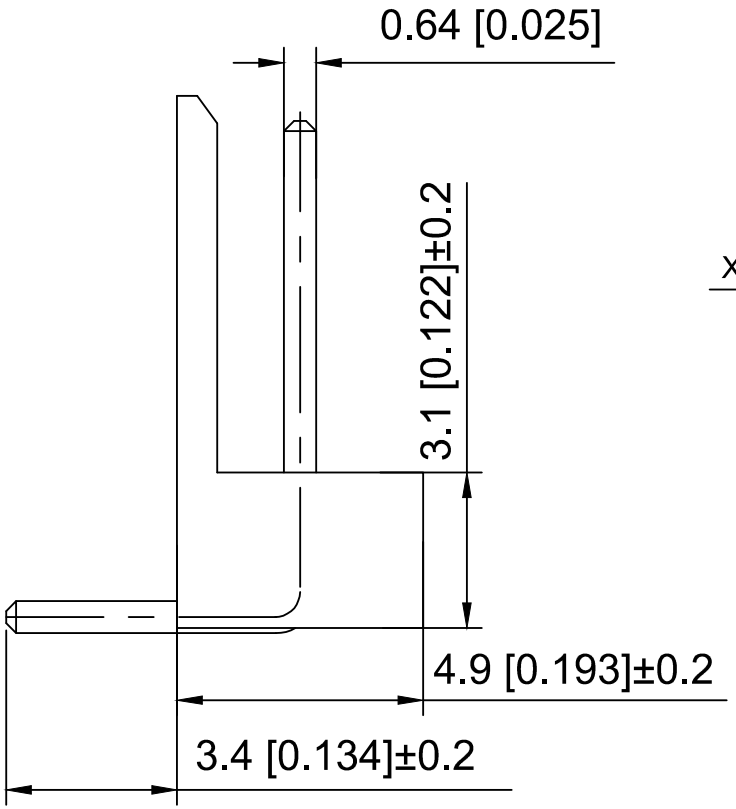

Specifications:
规格：
Voltage rating:250V AC/DC
额定电压：250V AC/DC
Current rating:3A AC/DC
额定电流：3A AC/DC
Withstanding voltage:1000V AC/minute
耐受电压：1000V AC/分钟
Temperature range:-25℃-+85℃
温度范围：-25℃-+85℃
Insulation resistance:1000MΩ min
绝缘电阻：1000MΩ Min
Contact resistance:20mΩ Max
接触电阻：20mΩ Max

X2511 W R - 02 - N0 SN
① ② ③ ④ ⑤ ⑥

1.Series No
2.Category:W-Wafer
3.Welding Board Angle:R-Stright 90°
4.Row No.Pin No:XX-02~12P
5.Material:N0-PA66 UL94V-0
6.Plating:SN-Tin Plated

Poles	Dimensions(mm)	
	A	B
02	2.50	5.00
03	5.00	7.50
04	7.50	10.00
05	10.00	12.50
06	12.50	15.00
07	15.00	17.50
08	17.50	20.00
09	20.00	22.50
10	22.50	25.00
11	25.00	27.50
12	27.50	30.00

X2511WR-02-N0SN	PA66	Brass	X2511H
PART N0	Material	Material(Pin)	Suitable XKB Housing

MARK	DESCRIPTION	DATE	REVISED	APPROVED
ΔX				
ΔX				
ΔX				

REVISIONS

ANGLAR	±5°
L≤ 4	±0.2
4<L≤ 16	±0.3
16<L≤ 63	±0.4
L> 63	±0.5

UNSPECIFIED TOLERANCES

www.helloxkb.com www.helloxkb.cn www.xk-dg.cn

XKB INDUSTRIAL PRECISION CO.,LIMITED

DSND		SCALE: N/A	MODEL TYPE: 2.5mm Crimp Style Connector
DWN		VIEW:	PART NO.: X2511WR-02-N0SN
CHKD		UNIT: mm/in	DWG NO.: X-X2511WR-02-N0SN
APPD		SIZE: A4	

WEIGHT	SHEET	REVISION
	1/1	A0