ROHS Compliant

MAPX	MODIFICATION	DATE	DRAW	APPROVE

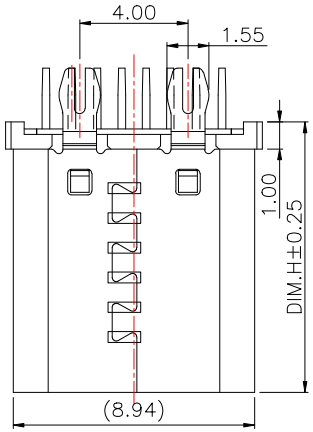

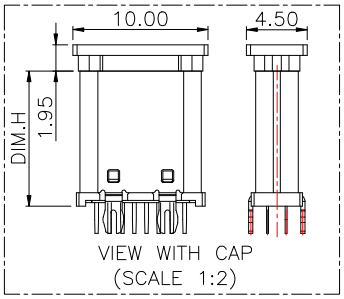

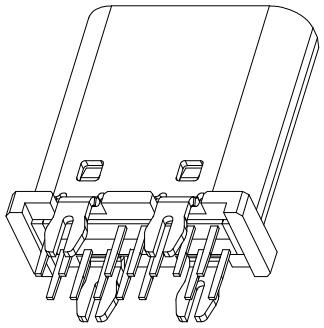

3D View

SPECIFICATION:
1. MATERIAL & FINISH:SEE THE LIST;
2. PLATING SPECIFICATION:
2-1.CONTACTS:
Ni 50u" MIN. UNDER PLATED OVER ALL.
Au PLATED ON THE MATING AREA OF CONTACT.
Sn PLATED ON THE SOLDER AREA.
2-2.SHELL:Ni 30u" MIN. UNDER PLATED OVER ALL.
2-3.MID PLATE:CLEAR ONLY
3. MECHANICAL:
3.1.MATING FORCE:0.5~2.0kgf;
3.2.UNMATING FORCE:0.8~2.0kgf.
0.6~2.0kgf AFTER DURABILITY TEST;
3.3.DURABILITY:10000 CYCLES;
4.ELECTRICAL:
4.1.CURRENT RATING:5A Max;
4.2.VOLTAGE RATING:20V Max;
4.3.DIELECTRIC WITHSTANDING VOLTAGE:100VAc;
4.4.CONTACT RESISTANCE:40mΩ Ohms Max.;
4.5.INSULATION RESISTANCE:100M Ohms Min.;
5.ENVIRONMENTAL:
5.1.OPERATING TEMPERATURE:-40°C~+85°C;
5.2.WETTING TEMPERATURE:265±5°C,5±0.5s
5.3.Salt Spray Test:48H Min

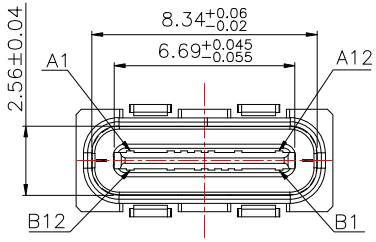

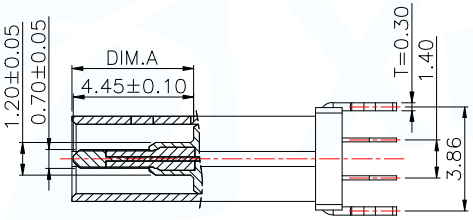

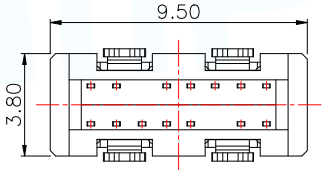

NO.	DIM.H	DIM.A
TYPEC-214-ARP14H100	10.0	4.50
TYPEC-214-ARP14H105	10.5	5.00

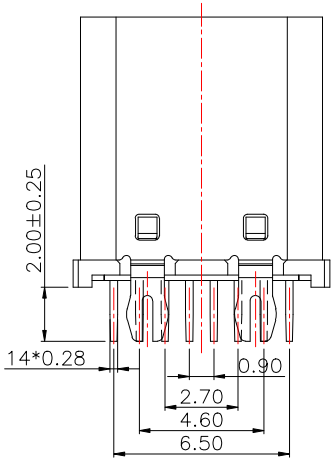

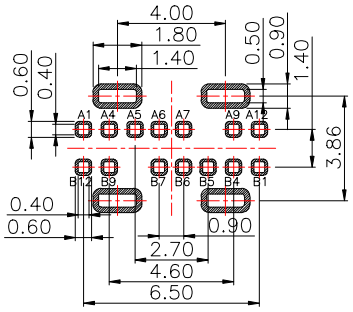

RECOMMENDED P.C.B. LAYOUT
TOLERANCE UNSPECIFIED ±0.05mm

PIN DEFINE TABLE			
PIN	SIGNAL	PIN	SIGNAL
A12	GND	B1	GND
A11		B2	
A10		B3	
A9	VBUS	B4	VBUS
A8		B5	CC2
A7	D-	B6	D+
A6	D+	B7	D-
A5	CC1	B8	
A4	VBUS	B9	VBUS
A3		B10	
A2		B11	
A1	GND	B12	GND

NO.	PART NAME	Q'TY	MATERIAL	FINISH
4	Shell	1	Stainless Steel,T=0.30mm	30u"Ni Min.
3	GroundBar	1	Stainless Steel,T=0.15mm	No Plating
2	Contact	14	Copper Alloy,T=0.15mm	Au/Sn/Ni-Plated
1	Housing	1	High temperature plastic	UL94 V-0,Black

MANUFACTURE DWG	东莞市讯普电子科技有限公司 DongGuan XunPu Electronics Co,Ltd	
UNLESS OTHERWISE SPECIFED TOLERANCES		TITLE:TYPE-C 14P直立式DIP型母座 H10.0&10.5mm
		PAR: TYPEC-214-ARP14HXXX
DECIMALS: / ANGLES:		DWN:
.X:±0.35 / .X°:±3.0°		CHKD:
.XX:±0.25 / .XX°:±2.5°		APVD:
.XXX:±0.15 / .XXX°:±2.0°	CUSTOMER COPY	SCALE1:1 / UNIT:MM / SIZE:A4 / SHEET:1F1 / REV:A

ROHS Compliant

MAPX	MODIFICATION	DATE	DRAW	APPROVE

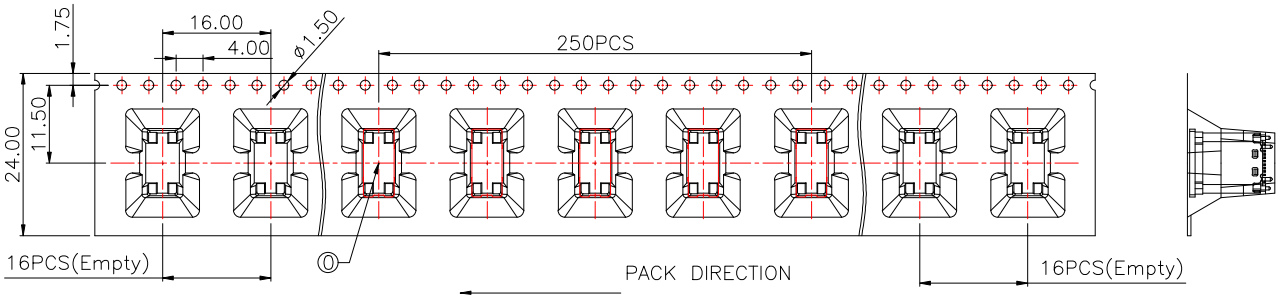

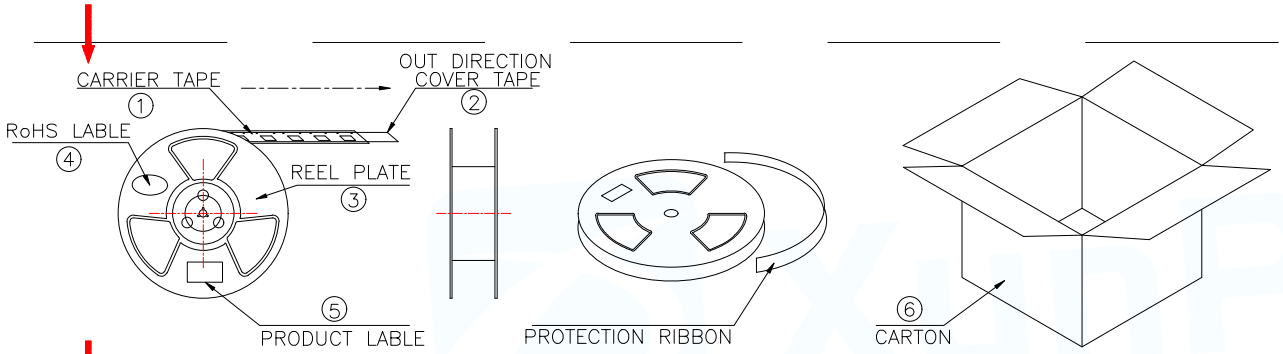

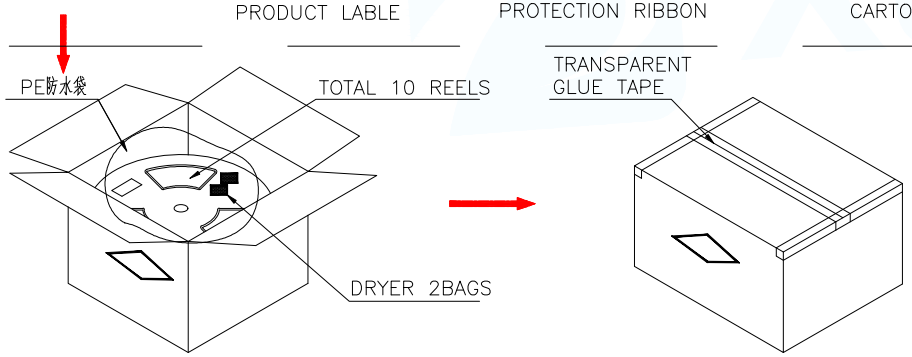

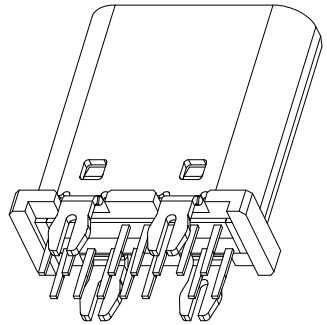

说明:

1.每卷前后各空16PCS,尾部用美纹胶纸封住;
2.将产品放满盘后,再卷一圈保护带,用美纹胶纸
将其封住,并贴上1Pcs物料标签;
3.每10卷盘一叠共2500Pcs并装入1个外箱内;
4.在搬运过程中要轻拿轻放;
5.在运输中不可堆放过多(1.8M最高),不可重压;
6.跌落测试条件:
成品箱从1.2米高度自由落体(一角三棱六面):
a.产品不可跑出下带凹槽;
b.产品不可有摔伤,变形;
c.内包装材料不可严重破损.

NO.	NAME	SPEC	Q'TY
0	TYPE C RECEPTACLE		2500PCS/CARTON
1	CARRIER TAPE	W=24mm,T=0.50mm	250PCS/PLATE
2	COVER TAPE	W=21.3mm	10PLATES/CARTON
3	REEL PLATE	ø330*100*24.4mm	10PCS/CARTON
4	RoHS LABEL		10PCS/CARTON
5	PRODUCT LABER		10PCS/CARTON
6	CARTON	350*340*310mm	1PCS/PACKAGE

MANUFACTURE DWG	东莞市讯普电子科技有限公司 DongGuan XunPu Electronics Co,Ltd		
UNLESS OTHERWISE SPECIFED TOLERANCES		TITLE:TYPE-C 14P直立式DIP型母座 H10.0&10.5mm	
		PAR	TYPEC-214-ARP14HXXX
DECIMALS: / ANGLES:		DWN	
.X:±0.35 / .X°:±3.0°		CHKD	
.XX:±0.25 / .XX°:±2.5°		APVD	
.XXX:±0.15 / .XXX°:±2.0°	CUSTOMER COPY	SCALE1:1 / UNIT:MM	
		SIZE:A4 / SHEET:1F1	REV:A

Unikeyic Electronics

Global Electronic Components Distributor

Click to view pricing, inventory, delivery, and lifecycle information:

XUNPU:

FPC-0.5FX-20PWBH15 WAFER-WBM4.2-16PJK-GB RJ45-005-014-11 WAFER-GH1.25-6PLB WAFER-XH2.54-4PWZ-H62 FPC-0.5AS-5PWCR-H20 FPC-1.0AX-14PWCR-H25 MU-103-ARW64 TYPEC-304YDSW-ACP16 WAFER-PH2.0-6PWB DC-031A-A100 FPC-0.5AL-6PB FPC-0.5FX-4PWCR-H20 PHB2.0-02-20PZZ WAFER-PH2.0-11PZZ FPC-0.5AX-24PWCR-H20 FPC-0.5AX-30PWCR-H20 FPC-0.5FX-4PWBH15 FPC-1.0AX-4PWCR-H25 FPC-1.0HF-4PWAR-H20 HDMI-212L WAFER-VH3.96-4PLB FPC-0.5FX-16PWCR-H20 SMA-KWE-323C-H13X23-LW WAFER-PH2.0-8PLB WAFER-MX1.25B-8PWB WAFER-PH2.0-3PWB FPC-0.5FX-14PWCR-H20 FPC-0.5HF-10PWBR-H20 WAFER-PH2.0-2PJK