

Inductive sensor

NBB20-L2-A2-C-V1

- Sensor head bidirectional and rotatable
- 20 mm flush
- 4-wire DC
- Weld Immune
- Quick mounting bracket
- 4-way LED indicator

Dimensions

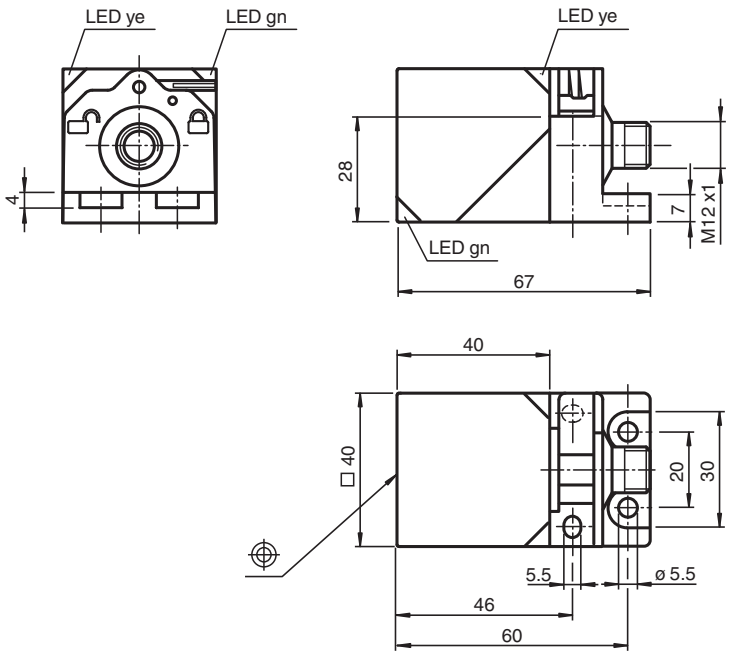

Technical Data

General specifications		
Switching function		complementary
Output type		PNP
Rated operating distance	s_n	20 mm
Installation		flush
Output polarity		DC
Assured operating distance	s_a	0 ... 16.2 mm
Actual operating distance	s_r	18 ... 22 mm
Reduction factor r_{Al}		0.33
Reduction factor r_{Cu}		0.31

Release date: 2024-05-28 Date of issue: 2024-06-02 Filename: 132787_eng.pdf

Technical Data

Reduction factor r_{304}		0.74
Reduction factor r_{Brass}		0.41
Output type		4-wire
Nominal ratings		
Operating voltage	U_B	10 ... 30 V DC
Switching frequency	f	0 ... 5 Hz
Hysteresis	H	typ. 5 %
Reverse polarity protection		reverse polarity protected
Short-circuit protection		pulsing
Voltage drop	U_d	≤ 3 V
Operating current	I_L	0 ... 200 mA
Off-state current	I_r	0 ... 0.5 mA
No-load supply current	I_0	≤ 20 mA
Time delay before availability	t_v	300 ms
Operating voltage indicator		LED, green
Switching state indicator		LED, yellow
Functional safety related parameters		
$MTTF_d$		1170 a
Mission Time (T_M)		20 a
Diagnostic Coverage (DC)		0 %
Compliance with standards and directives		
Standard conformity		
Standards		EN IEC 60947-5-2
Approvals and certificates		
Protection class		II
Rated insulation voltage	U_i	253 V
Rated impulse withstand voltage	U_{imp}	4000 V
UL approval		cULus Listed, General Purpose
CCC approval		CCC approval / marking not required for products rated ≤36 V
Ambient conditions		
Ambient temperature		-25 ... 85 °C (-13 ... 185 °F)
Storage temperature		-25 ... 85 °C (-13 ... 185 °F)
Mechanical specifications		
Connection type		Connector plug M12 x 1 , 4-pin
Housing material		PA
Sensing face		PA
Degree of protection		IP69K
Mass		130 g
Dimensions		
Height		40 mm
Width		40 mm
Length		67 mm

Connection

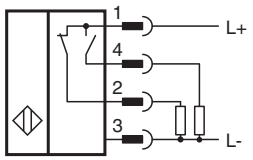

Release date: 2024-05-28 Date of issue: 2024-06-02 Filename: 132787_eng.pdf

Connection Assignment

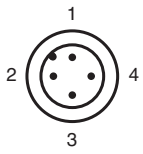

Wire colors in accordance with EN 60947-5-2

1	BN	(brown)
2	WH	(white)
3	BU	(blue)
4	BK	(black)

Release date: 2024-05-28 Date of issue: 2024-06-02 Filename: 132787_eng.pdf