MICRO SWITCH
FREEPORT, ILLINOIS U.S.A.
A DIVISION OF HONEYWELL
FED. MFG. CODE 91929

SWITCH - ENCLOSED

CATALOG LISTING
1EN8-8

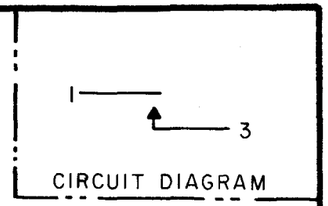

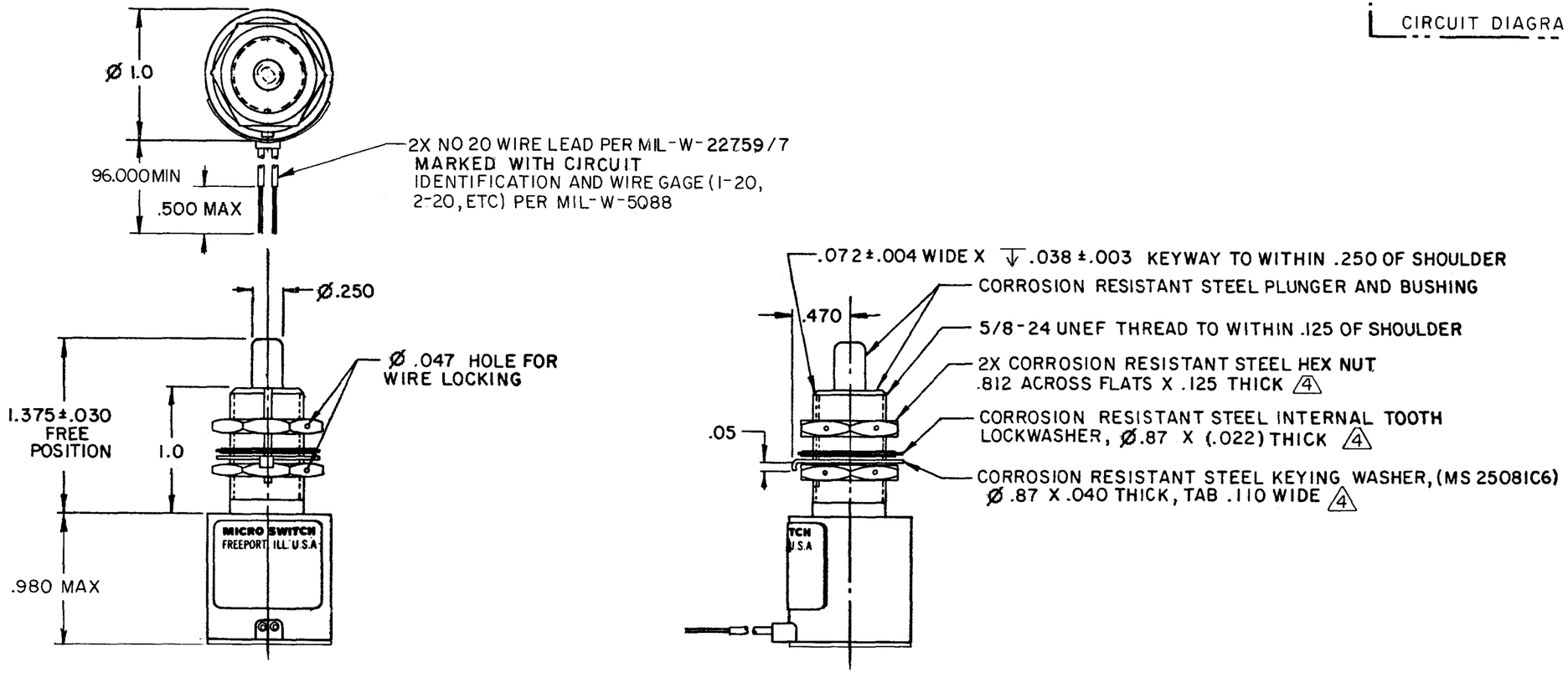

NOTES
1 CORROSION RESISTANT STEEL ENCLOSURE
2 SWITCH SEALED PER MIL-S-8805, SYMBOL 4
3 CIRCUIT DIAGRAM, DATE CODE, FED. MFG. CODE AND CATALOG LISTING ARE SHOWN ON NAMEPLATE
4 HARDWARE MAY BE PACKAGED UNASSEMBLED PER MIL-S-8805

ANSI Y14.5M-1982 APPLIES

THIS DRAWING COVERS A PROPRIETARY ITEM AND IS THE PROPERTY OF MICRO SWITCH. A DIVISION OF HONEYWELL. THIS DRAWING IS NOT TO BE COPIED OR USED WITHOUT THE APPROVAL OF MICRO SWITCH.

SCALE FULL
DO NOT SCALE PRINT

CHARACTERISTICS

OPERATING FORCE - - - - - - - - - 6-12 LB
FULL OVERTRAVEL FORCE - - - - - - 30 LB MAX
RELEASE FORCE - - - - - - - - - - 4 LB MIN
PRETRAVEL - - - - - - - - - - - - .040 MAX
DIFFERENTIAL TRAVEL - - - - - - - .020 MAX
OVERTRAVEL - - - - - - - - - - - .250 MIN

ELECTRICAL DATA

CONTACT ARRANGEMENT
S P N O

LOAD	28 VDC SEA LEVEL	28 VDC 50,000 FT.
RES	4	4
IND	2	2
MOTOR	4	
LAMP		

TOLERANCES
APPLY TO DESIGN UNITS. CONVERSIONS ARE ONLY FOR REFERENCE. UNLESS NOTED, TOLERANCES ARE ±

	DIM. mm	TOL. mm/in	DIM. in	TOL. mm/in
NO PLACES	X	1/.04		
ONE PLACE	X.X	0.4/.016	X.X	0.8/.03
TWO PLACES	X.XX	0.15/.006	X.XX	0.38/.015
THREE PLACES			X.XXX	0.13/.005
ANGLES				

DESIGN UNITS SI METRIC ☐ US CUSTOMARY ☒

THIRD ANGLE PROJECTION

WEIGHT 4.5 OZ MAX

REVISIONS

A	PR-10723	KAG 16 NOV 81
B	C051725C	KAG 19 JAN 82
C	C057370	TSK 15 MAY 85
D	C074101	DAW 8 FEB 93
E	CO-77504 C	DLT 26 JUL 94
F	CO-94005	PPF 14 DEC 98

M 1EN8-8 PAGE 1 OF 1
DRAWING NUMBER
RELEASE NO. PR-10723
REPLACES
ISSUE 7
14 DEC 98
JAF
CHECK
17 NOV 81
GLL
CHECK
16 NOV 81
DW
CHECK
16 NOV 81
DRAWN KAG

FORMTEK FO-52851-B

Unikeyic Electronics

Global Electronic Components Distributor

Click to view pricing, inventory, delivery, and lifecycle information:

Honeywell:

3106 00030136 SSCDANT030PASA5 SSCDLNN001PDAA5 SSCSNBN005PDAA5 LSZ55D SSCDRNN100PG2A5 SSCMANN006BGAA3 SZL-WLC-A LSZ1R LSZ1UB LSZ4012 SSCDANN150PG2A3 SSCMRNN600MDAA5 TSCSMNN100PDUCV 14CX1 SZRMY21PAC110120V LSZ1MB LSZ53 SSCDRRN005PD2A3 SSCDRRN060MDAA5 SSCMRRN005PD7A3 3150U 00090147 SSCDRRN001PD2A5 SZL-VL-E SZL-VL-S-G-N-M V15H16-CZ300A02-K 1865-13G-LDN SSCDRNT1.6BAAA3 SZL-VL-S-B-N-M SZL-WLC-A-N