FUJITSU SEMICONDUCTOR
DATA SHEET

DS501-00019-2v0-E

Memory FRAM

64 K (8 K × 8) Bit I²C

MB85RC64A

■ DESCRIPTION

The MB85RC64A is an FRAM (Ferroelectric Random Access Memory) chip in a configuration of 8,192 words × 8 bits, using the ferroelectric process and silicon gate CMOS process technologies for forming the nonvolatile memory cells.

Unlike SRAM, the MB85RC64A is able to retain data without using a data backup battery.

The read/write endurance of the nonvolatile memory cells used for the MB85RC64A has improved to be at least 10^{12} cycles, significantly outperforming Flash memory and E²PROM in the number.

The MB85RC64A does not need a polling sequence after writing to the memory such as the case of Flash memory or E²PROM.

■ FEATURES

- Bit configuration : 8,192 words × 8 bits
- Two-wire serial interface : Fully controllable by two ports: serial clock (SCL) and serial data (SDA).
- Operating frequency : 1 MHz (Max)
- Read/write endurance : 10^{12} times / byte
- Data retention : 10 years (+ 85 °C), 95 years (+ 55 °C), over 200 years (+ 35 °C)
- Operating power supply voltage : 2.7 V to 3.6 V
- Low power consumption : Operating power supply current 250 µA (Typ @1 MHz)
  Standby current 5 µA (Typ)
- Operation ambient temperature range : – 40 °C to + 85 °C
- Package : 8-pin plastic SOP (FPT-8P-M02)
  RoHS compliant

Copyright©2012-2013 FUJITSU SEMICONDUCTOR LIMITED All rights reserved
2013.2

FUJITSU

■ PIN ASSIGNMENT

(TOP VIEW)

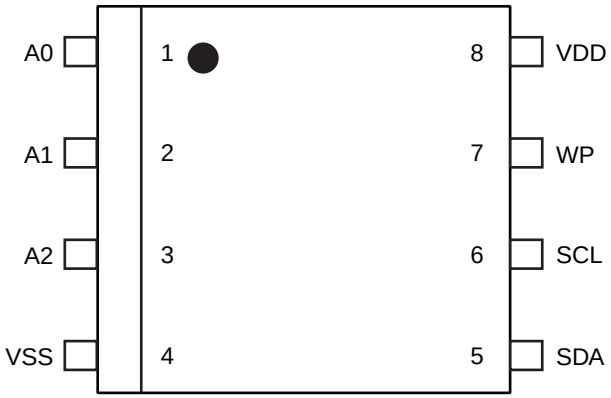

(FPT-8P-M02)

■ PIN FUNCTIONAL DESCRIPTIONS

Pin Number	Pin Name	Functional Description
1 to 3	A0 to A2	Device Address pins The MB85RC64A can be connected to the same data bus up to 8 devices. Device addresses are used in order to identify each of these devices. Connect these pins to VDD pin or VSS pin externally. Only if the combination of VDD and VSS pins matches a Device Address Code inputted from the SDA pin, the device operates. In the open pin state, A0, A1, and A2 pins are internally pulled-down and recognized as the “L” level.
4	VSS	Ground pin
5	SDA	Serial Data I/O pin This is an I/O pin which performs bidirectional communication for both memory address and writing/reading data. It is possible to connect multiple devices. It is an open drain output, so a pull-up resistor is required to be connected to the external circuit.
6	SCL	Serial Clock pin This is a clock input pin for input/output timing serial data. Data is sampled on the rising edge of the clock and output on the falling edge.
7	WP	Write Protect pin When the Write Protect pin is the “H” level, the writing operation is disabled. When the Write Protect pin is the “L” level, the entire memory region can be overwritten. The reading operation is always enabled regardless of the Write Protect pin input level. The write protect pin is internally pulled down to VSS pin, and that is recognized as the “L” level (write enabled) when the pin is the open state.
8	VDD	Supply Voltage pin

■ BLOCK DIAGRAM

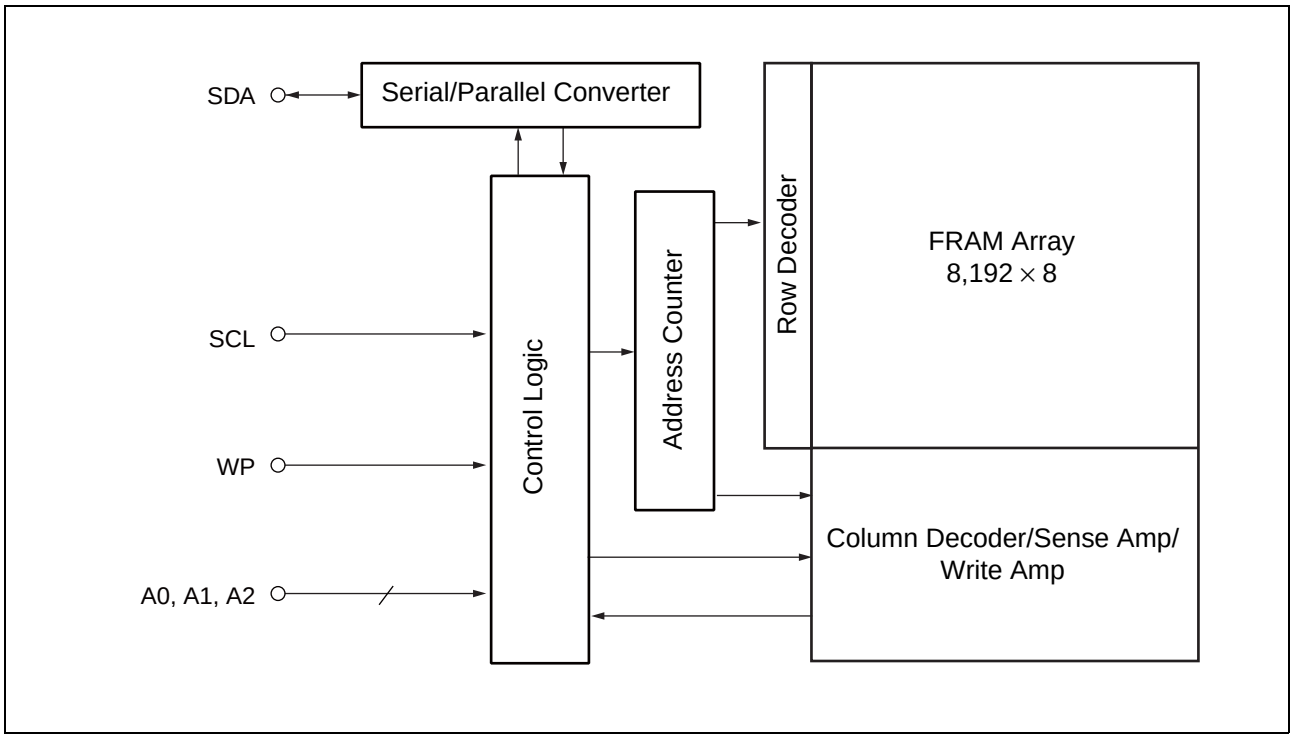

■ I²C (Inter-Integrated Circuit)

The MB85RC64A has the two-wire serial interface; the I²C bus,and operates as a slave device.
The I²C bus defines communication roles of “master” and “slave” devices, with the master side holding the authority to initiate control. Furthermore, an I²C bus connection is possible where a single master device is connected to multiple slave devices in a party-line configuration. In this case, it is necessary to assign a unique device address to the slave device, the master side starts communication after specifying the slave to communicate by addresses.

• I²C Interface System Configuration Example

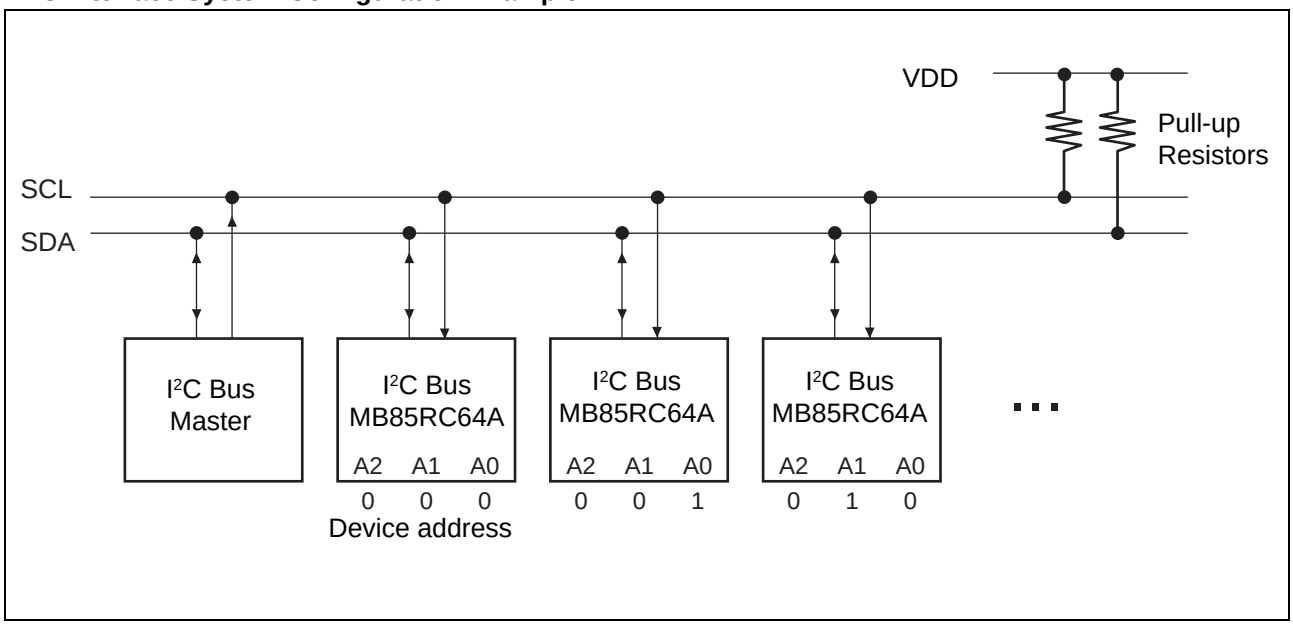

■ I²C COMMUNICATION PROTOCOL

The I²C bus is a two wire serial interface that uses a bidirectional data bus (SDA) and serial clock (SCL). A data transfer can only be initiated by the master, which will also provide the serial clock for synchronization. The SDA signal should change while SCL is the “L” level. However, as an exception, when starting and stopping communication sequence, SDA is allowed to change while SCL is the “H” level.

- Start Condition

To start read or write operations by the I²C bus, change the SDA input from the “H” level to the “L” level while the SCL input is in the “H” level.

- Stop Condition

To stop the I²C bus communication, change the SDA input from the “L” level to the “H” level while the SCL input is in the “H” level. In the reading operation, inputting the stop condition finishes reading and enters the standby state. In the writing operation, inputting the stop condition finishes inputting the rewrite data and enters the standby state.

• Start Condition, Stop Condition

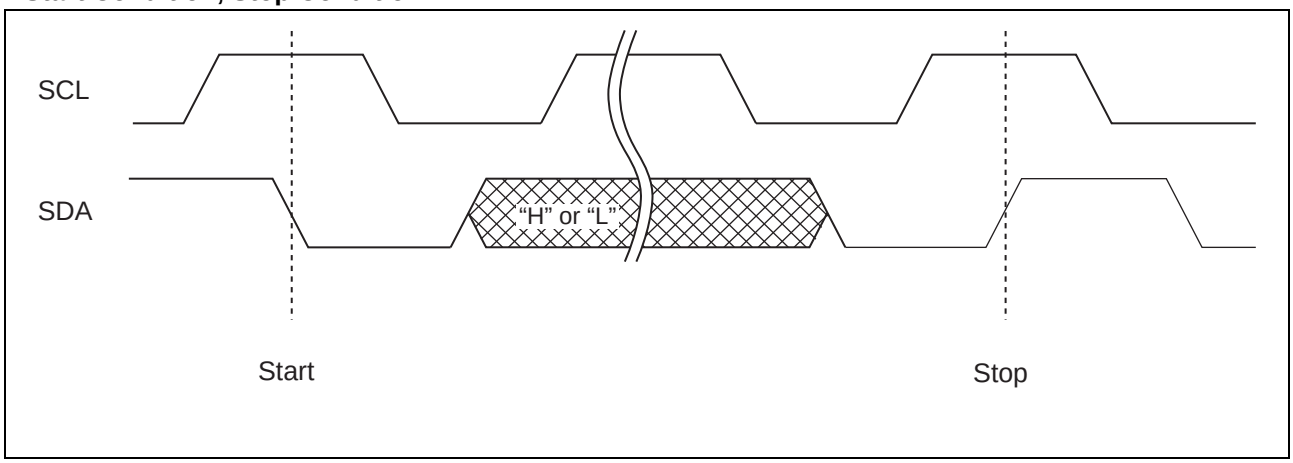

Note : At the write operation, the FRAM device does not need the programming wait time (t_{WC}) after issuing the Stop Condition.

■ ACKNOWLEDGE (ACK)

In the I²C bus, serial data including address or memory information is sent in units of 8 bits. The acknowledge signal indicates that every 8 bits of the data is successfully sent and received. The receiver side usually outputs the “L” level every time on the 9th SCL clock after each 8 bits are successfully transmitted and received. On the transmitter side, the bus is temporarily released to Hi-Z every time on this 9th clock to allow the acknowledge signal to be received and checked. During this Hi-Z-released period, the receiver side pulls the SDA line down to indicate the “L” level that the previous 8 bits communication is successfully received.

In case the slave side receives Stop condition before sending or receiving the ACK “L” level, the slave side stops the operation and enters to the standby state. On the other hand, the slave side releases the bus state after sending or receiving the NACK “H” level. The master side generates Stop condition or Start condition in this released bus state.

• Acknowledge timing overview diagram

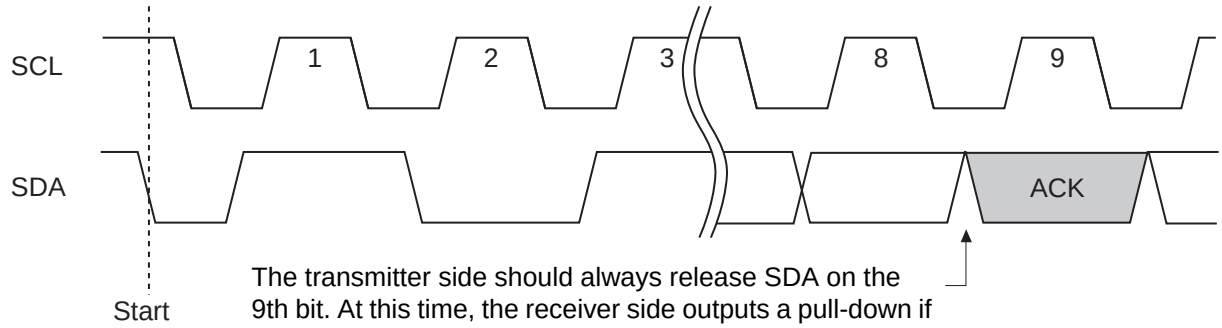

The transmitter side should always release SDA on the 9th bit. At this time, the receiver side outputs a pull-down if the previous 8 bits data are received correctly (ACK response).

■ DEVICE ADDRESS WORD (Slave address)

Following the start condition, the master sends the 8 bits device address word to start I²C communication. The device address word (8 bits) consists of a device Type code (4 bits), device address code (3 bits), and a read/write code (1 bit).

- Device Type Code (4 bits)

The upper 4 bits of the device address word are a device type code that identifies the device type, and are fixed at “1010” for the MB85RC64A.

- Device Address Code (3 bits)

Following the device type code, the 3 bits of the device address code are input in order of A2, A1, and A0. The device address code identifies one device from up to eight devices connected to the bus.
Each MB85RC64A is given a unique 3 bits code on the device address pin (external hardware pin A2, A1, and A0). The slave only responds if the received device address code is equal to this unique 3 bits code.

- Read/Write Code (1 bit)

The 8th bit of the device address word is the R/W (read/write) code. When the R/W code is “0”, a write operation is enabled, and the R/W code is “1”, a read operation is enabled for the MB85RC64A.

It turns to a stand-by state if the device code is not “1010” or device address code does not equal to pins A2, A1, and A0.

• Device Address Word

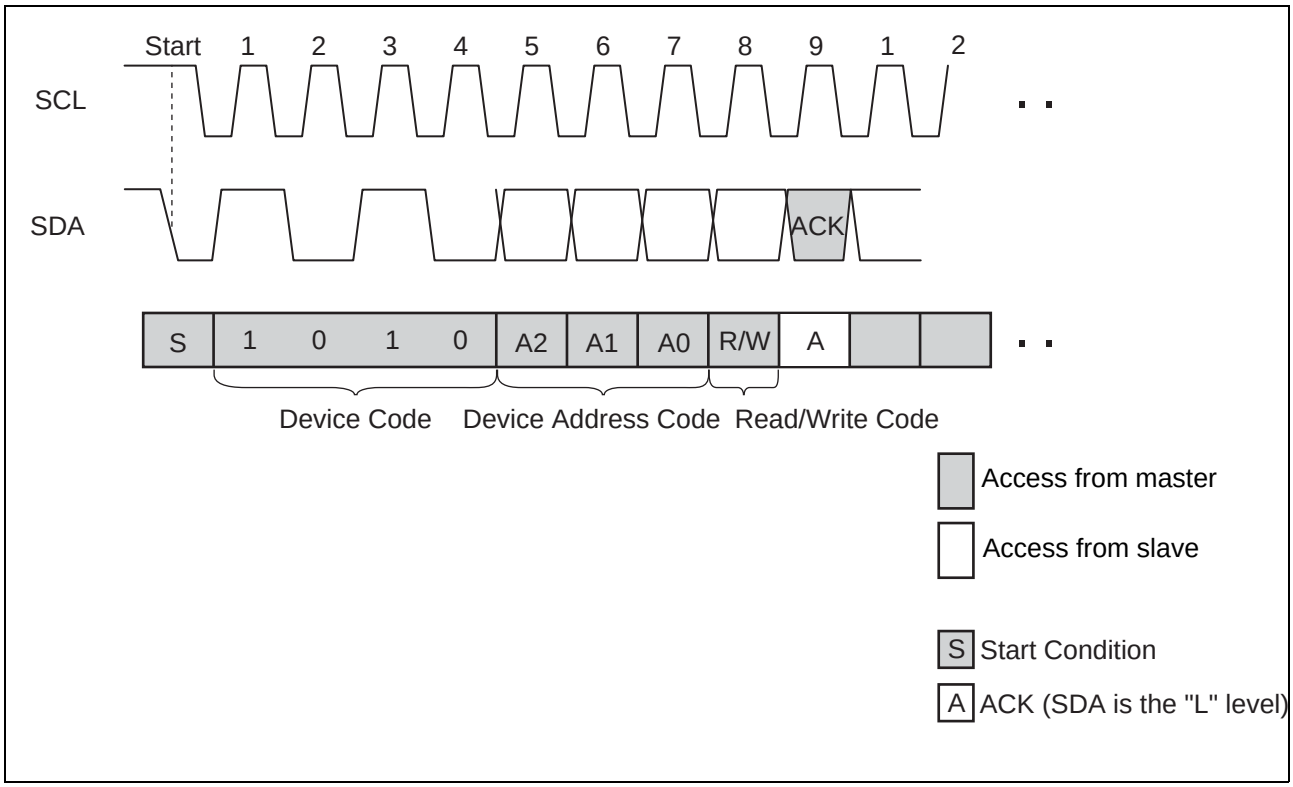

■ DATA STRUCTURE

In the I²C bus, the acknowledge “L” level is output on the 9th bit by a slave, after the 8 bits of the device address word following the start condition are input by a master. After confirming the acknowledge response by the master, the master outputs 8bits × 2 memory address to the slave. When the each memory address input ends, the slave again outputs the acknowledge “L” level. After this operation, the I/O data follows in units of 8 bits, with the acknowledge “L” level output after every 8 bits.

It is determined by the R/W code whether the data line is driven by the master or the slave. However, the clock line shall be driven by the master. For a write operation, the slave will accept 8 bits from the master, then send an acknowledge. If the master detects the acknowledge, the master will transfer the next 8 bits. For a read operation, the slave will place 8 bits on the data line, then wait for an acknowledge from the master.

■ FRAM ACKNOWLEDGE -- POLLING NOT REQUIRED

The MB85RC64A performs write operations at the same speed as read operations, so any waiting time for an ACK polling* does not occur. The write cycle takes no additional time.

*: In E²PROM, the Acknowledge Polling is performed as a progress check whether rewriting is executed or not. It is normal to judge by the 9th bit of Acknowledge whether rewriting is performed or not after inputting the start condition and then the device address word (8 bits) during rewriting.

■ WRITE PROTECT (WP)

The entire memory array can be write protected using the Write Protect pin. When the Write Protect pin is set to the “H” level, the entire memory array will be write protected. When the Write Protect pin is the “L” level, entire memory array will be rewritten. Reading is allowed regardless of the WP pin's “H” level or “L” level.

Note : The Write Protect pin is pulled down internally to VSS pin, therefore if the Write Protect pin is open, the pin status is detected as the “L” level (write enabled).

■ COMMAND

• Byte Write

If the device address word (R/W “0” input) is sent following the start condition, the slave responds with an ACK. After this ACK, write addresses and data are sent in the same way, and the write ends by generating a stop condition at the end.

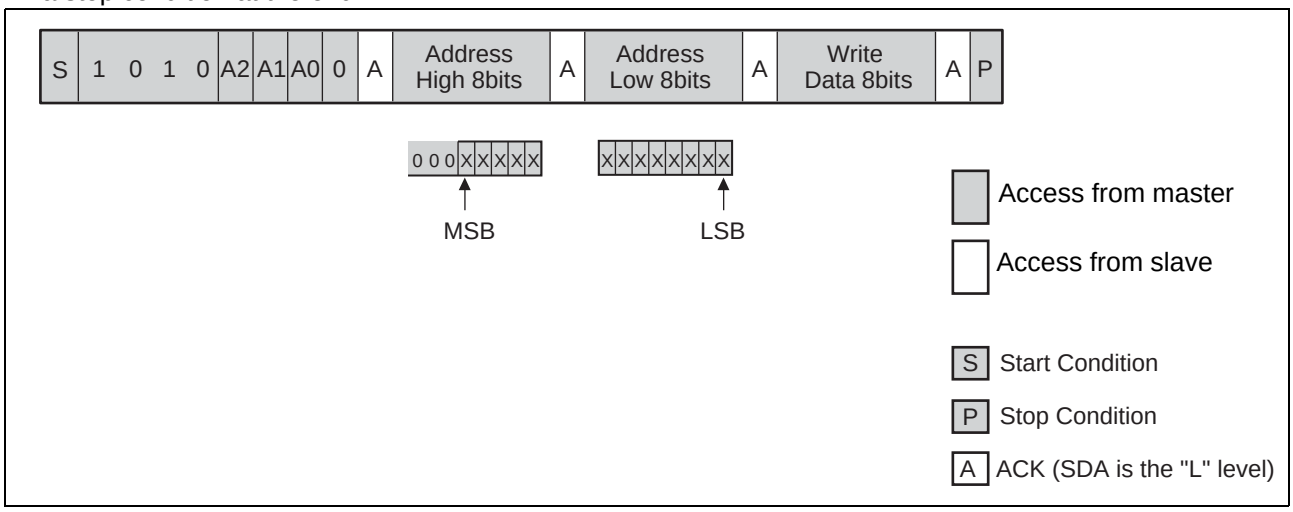

Note : In the MB85RC64A, input “000” as the upper 3 bits of the MSB.

• Page Write

If additional 8 bits are continuously sent after the same command (except stop condition) as Byte Write, a page write is performed. The memory address rolls over to first memory address (0000_H) at the end of the address. Therefore, if more than 8 Kbytes are sent, the data is overwritten in order starting from the start of the memory address that was written first. Because FRAM performs the high-speed write operations, the data will be written to FRAM right after the ACK response finished.

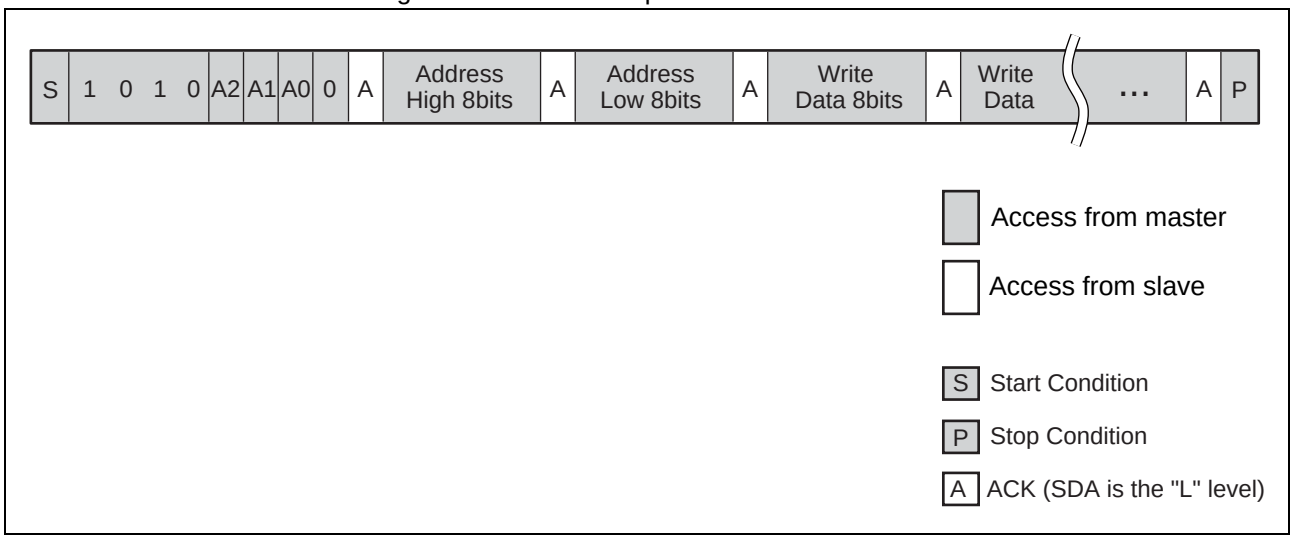

Note : It is not necessary to take a period for internal write operation cycles from the buffer to the memory after the stop condition is generated.

• Current Address Read

When the previous write or read operation finishes successfully up to the stop condition and assumes the last accessed address is “n”, then the address at “n+1” is read by sending the following command unless turning the power off. If the memory address is last address, the address counter will roll over to 0000_H. The current address in memory address buffer is undefined immediately after the power is turned on.

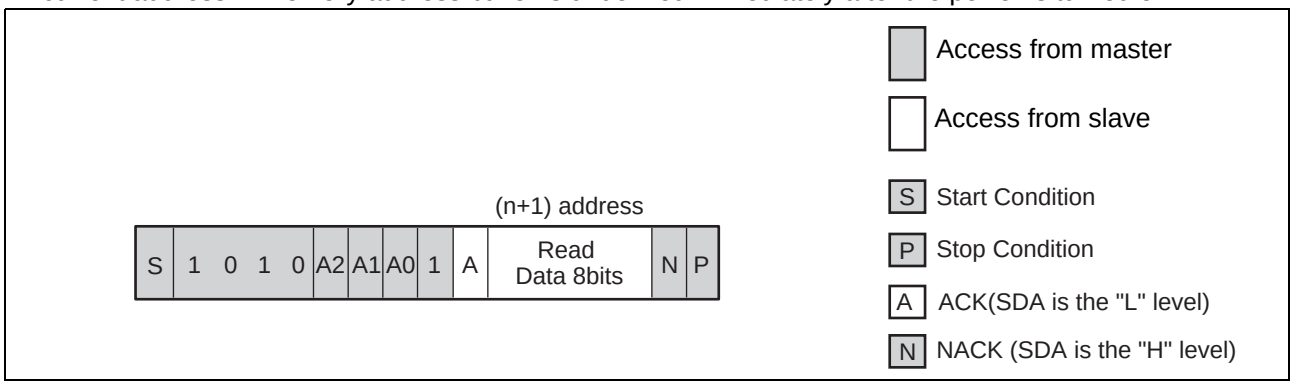

• Random Read

The one byte of data from the memory address saved in the memory address buffer can be read out synchronously to SCL by specifying the address in the same way as for a write, and then issuing another start condition and sending the Device Address Word (R/W “1” input).

The final NACK is issued by the receiver that receives the data. In this case, this bit is issued by the master side.

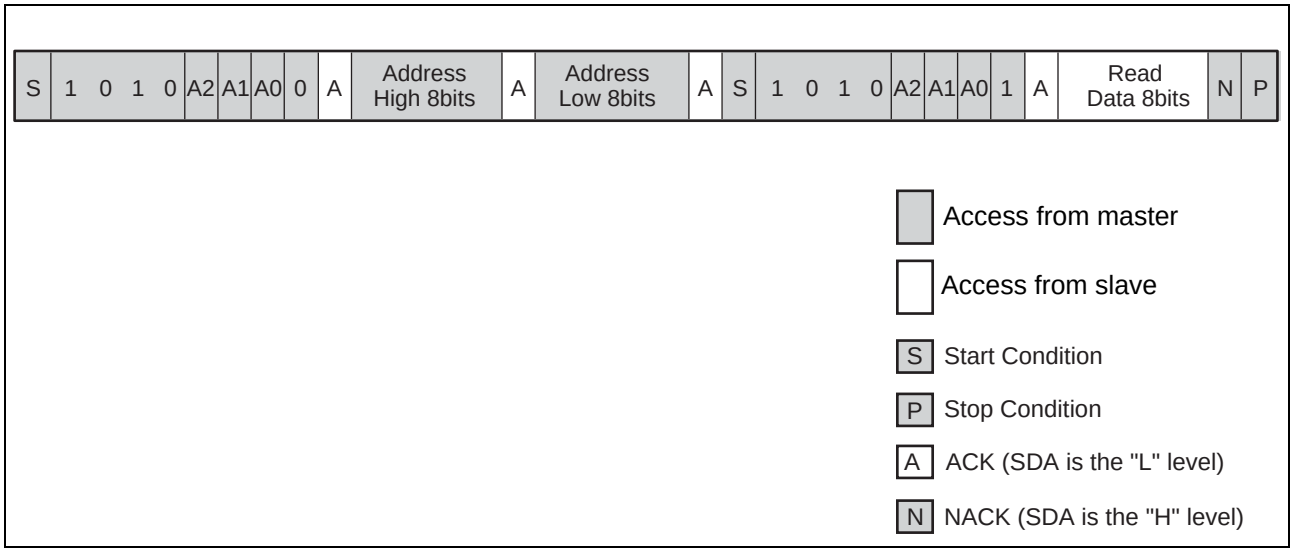

• Sequential Read

Data can be received continuously following the Device address word (R/W “1” input) after specifying the address in the same way as for Random Read. If the read reaches the end of address, the internal read address automatically rolls over to first memory address 0000_H and keeps reading.

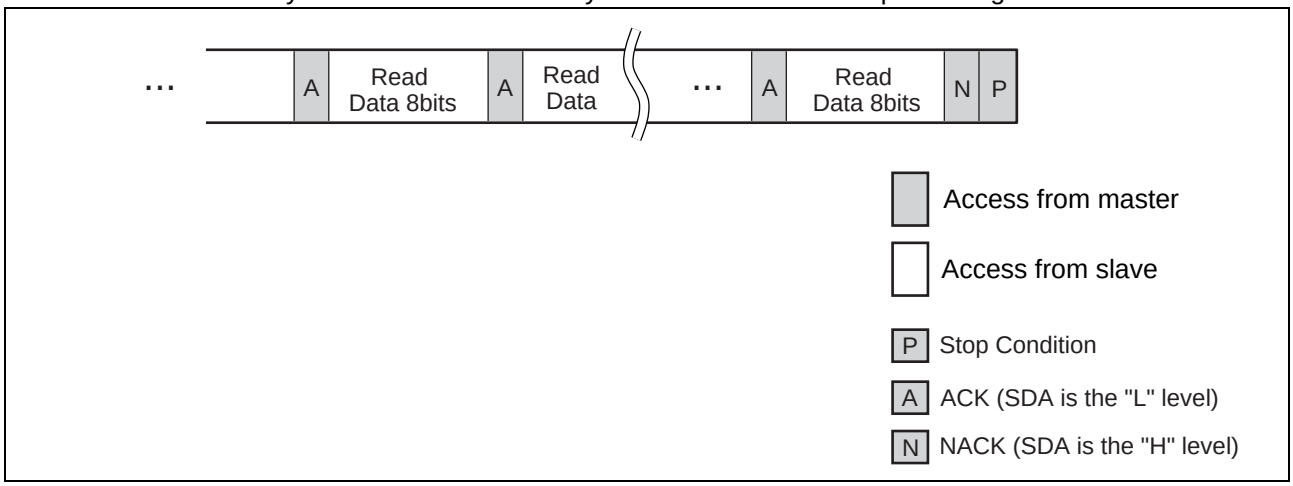

■ SOFTWARE RESET SEQUENCE OR COMMAND RETRY

In case the malfunction has occurred after power on, the master side stopped the I²C communication during processing, or unexpected malfunction has occurred, execute the following (1) software recovery sequence just before each command, or (2) retry command just after failure of each command.

(1) Software Reset Sequence

Since the slave side may be outputting “L” level, do not force to drive “H” level, when the master side drives the SDA port. This is for preventing a bus conflict. The additional hardware is not necessary for this software reset sequence.

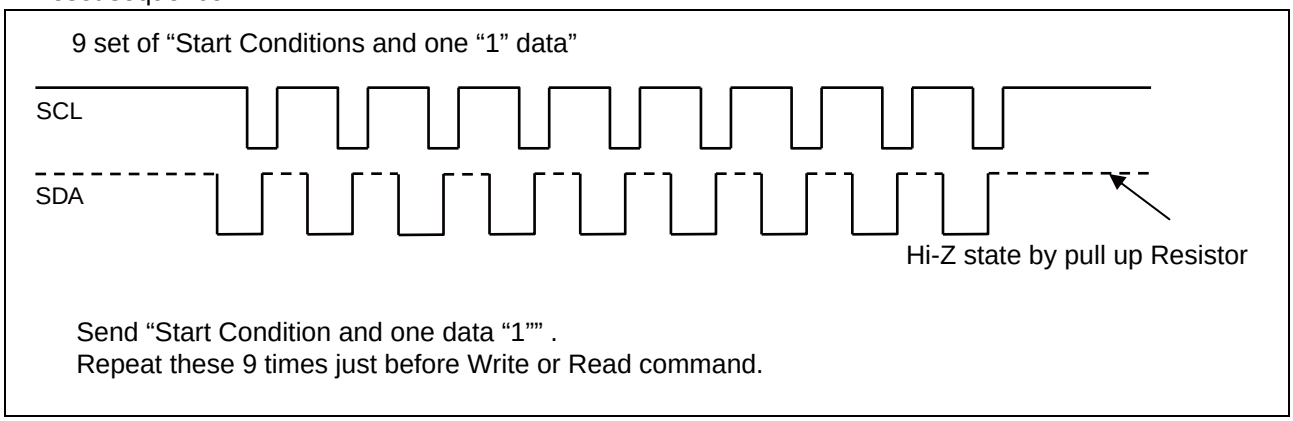

(2) Command Retry

Command retry is useful to recover from failure response during I²C communication.

■ ABSOLUTE MAXIMUM RATINGS

Parameter	Symbol	Rating		Unit
		Min	Max	
Power supply voltage*	V_{DD}	– 0.5	+4.0	V
Input voltage*	V_{IN}	– 0.5	V_{DD} + 0.5 (≤ 4.0)	V
Output voltage*	V_{OUT}	– 0.5	V_{DD} + 0.5 (≤ 4.0)	V
Operation ambient temperature	T_A	– 40	+ 85	°C
Storage temperature	Tstg	– 55	+ 125	°C

*: These parameters are based on the condition that VSS is 0 V.

WARNING: Semiconductor devices can be permanently damaged by application of stress (voltage, current, temperature, etc.) in excess of absolute maximum ratings. Do not exceed these ratings.

■ RECOMMENDED OPERATING CONDITIONS

Parameter	Symbol	Value			Unit
		Min	Typ	Max	
Power supply voltage*	V_{DD}	2.7	3.3	3.6	V
“H” level input voltage*	V_{IH}	$V_{DD} \times 0.8$	—	V_{DD} + 0.5 (≤ 4.0)	V
“L” level input voltage*	V_{IL}	– 0.5	—	+ 0.6	V
Operation ambient temperature	T_A	– 40	—	+ 85	°C

*: These parameters are based on the condition that VSS is 0 V.

WARNING: The recommended operating conditions are required in order to ensure the normal operation of the semiconductor device. All of the device's electrical characteristics are warranted when the device is operated within these ranges.

Always use semiconductor devices within their recommended operating condition ranges. Operation outside these ranges may adversely affect reliability and could result in device failure.

No warranty is made with respect to uses, operating conditions, or combinations not represented on the data sheet. Users considering application outside the listed conditions are advised to contact their representatives beforehand.

■ ELECTRICAL CHARACTERISTICS

1. DC Characteristics

(within recommended operating conditions)

Parameter	Symbol	Condition	Value			Unit
			Min	Typ	Max	
Input leakage current	$\|I_{LI}\|$	SCL, SDA = 0 V to V_{DD}	—	—	1	µA
Output leakage current	$\|I_{LO}\|$	SDA = 0 V to V_{DD}	—	—	1	µA
Operating power supply current	I_{DD}	SCL = 1 MHz	—	250	375	µA
Standby current	I_{SB}	SCL, SDA = V_{DD} A0, A1, A2, WP = 0 V or V_{DD}	—	5	20	µA
"L" level output voltage	V_{OL}	I_{OL} = 3 mA	—	—	0.4	V
Input resistance for WP, A0, A1 and A2	R_{IN}	$V_{IN} = V_{IL}$ (Max)	50	—	—	kΩ
		$V_{IN} = V_{IH}$ (Min)	1	—	—	MΩ

2. AC Characteristics

Parameter	Symbol	Value						Unit
		Standard Mode		Fast Mode		Fast Mode Plus		
		Min	Max	Min	Max	Min	Max	
SCL clock frequency	FSCL	0	100	0	400	0	1000	kHz
Clock high time	T_{HIGH}	4000	—	600	—	400	—	ns
Clock low time	T_{LOW}	4700	—	1300	—	600	—	ns
SCL/SDA rising time	T_r	—	1000	—	300	—	300	ns
SCL/SDA falling time	T_f	—	300	—	300	—	100	ns
Start condition hold	$T_{HD:STA}$	4000	—	600	—	250	—	ns
Start condition setup	$T_{SU:STA}$	4700	—	600	—	250	—	ns
SDA input hold	$T_{HD:DAT}$	0	—	0	—	0	—	ns
SDA input setup	$T_{SU:DAT}$	250	—	100	—	100	—	ns
SDA output hold	$T_{DH:DAT}$	0	—	0	—	0	—	ns
Stop condition setup	$T_{SU:STO}$	4000	—	600	—	250	—	ns
SDA output access after SCL falling	T_{AA}	—	3000	—	900	—	550	ns
Pre-charge time	T_{BUF}	4700	-	1300	-	500	—	ns
Noise suppression time (SCL and SDA)	T_{SP}	—	50	—	50	—	50	ns

AC characteristics were measured under the following measurement conditions.

Power supply voltage	: 2.7 V to 3.6 V
Operation ambient temperature	: – 40 °C to + 85 °C
Input voltage magnitude	: 0.3 V to 2.7 V
Input rising time	: 5 ns
Input falling time	: 5 ns
Input judge level	: $V_{DD}/2$
Output judge level	: $V_{DD}/2$

3. AC Timing Definitions

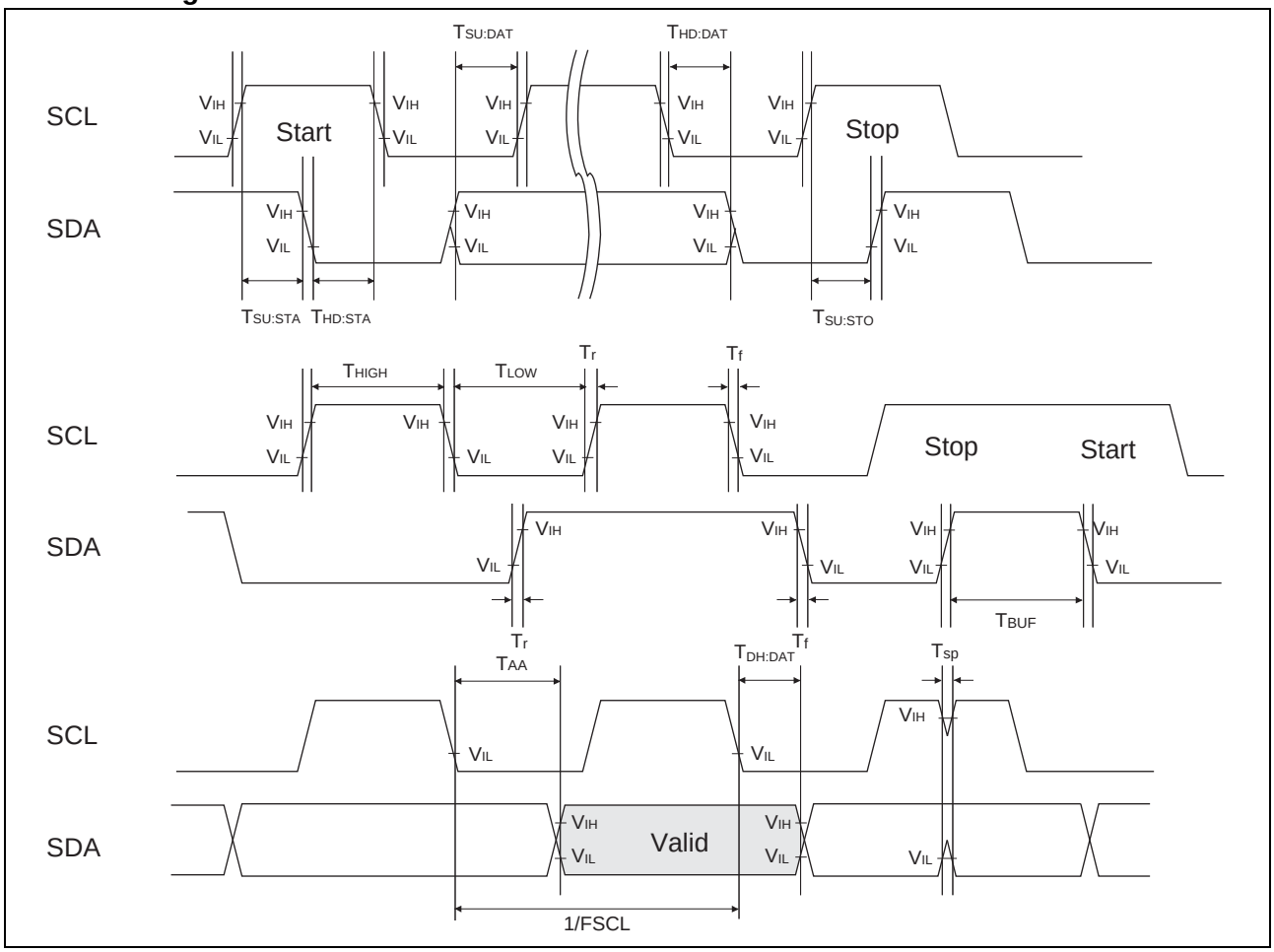

4. Pin Capacitance

Parameter	Symbol	Conditions	Value			Unit
			Min	Typ	Min	
I/O capacitance	$C_{I/O}$	$V_{DD} = V_{IN} = V_{OUT} = 0$ V, f = 1 MHz, $T_A = +25$ °C	—	—	15	pF
Input capacitance	C_{IN}		—	—	15	pF

5. AC Test Load Circuit

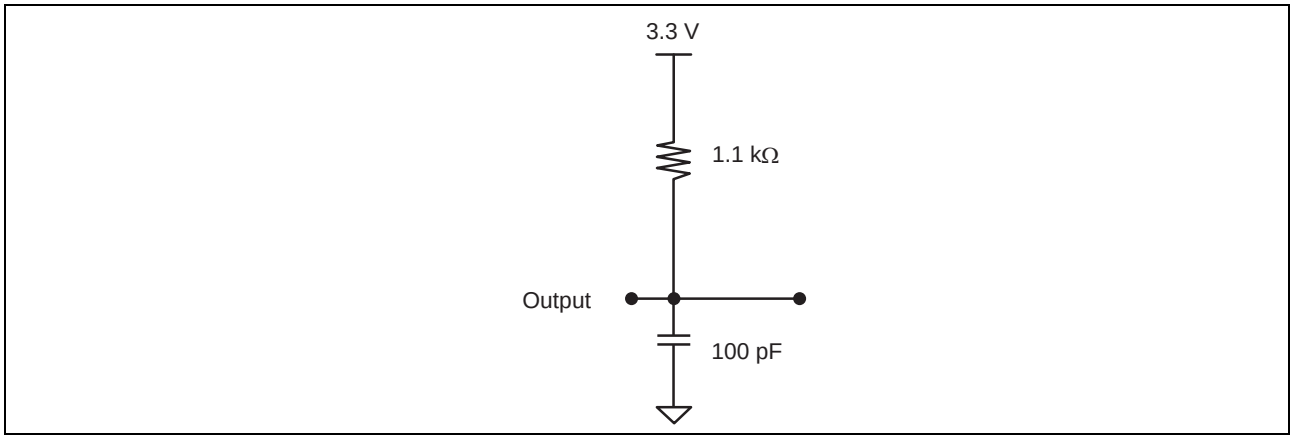

■ POWER ON/OFF SEQUENCE

If V_{DD} falls down below 2.0V, V_{DD} is required to be started from 0V to prevent malfunctions when the power is turned on again.

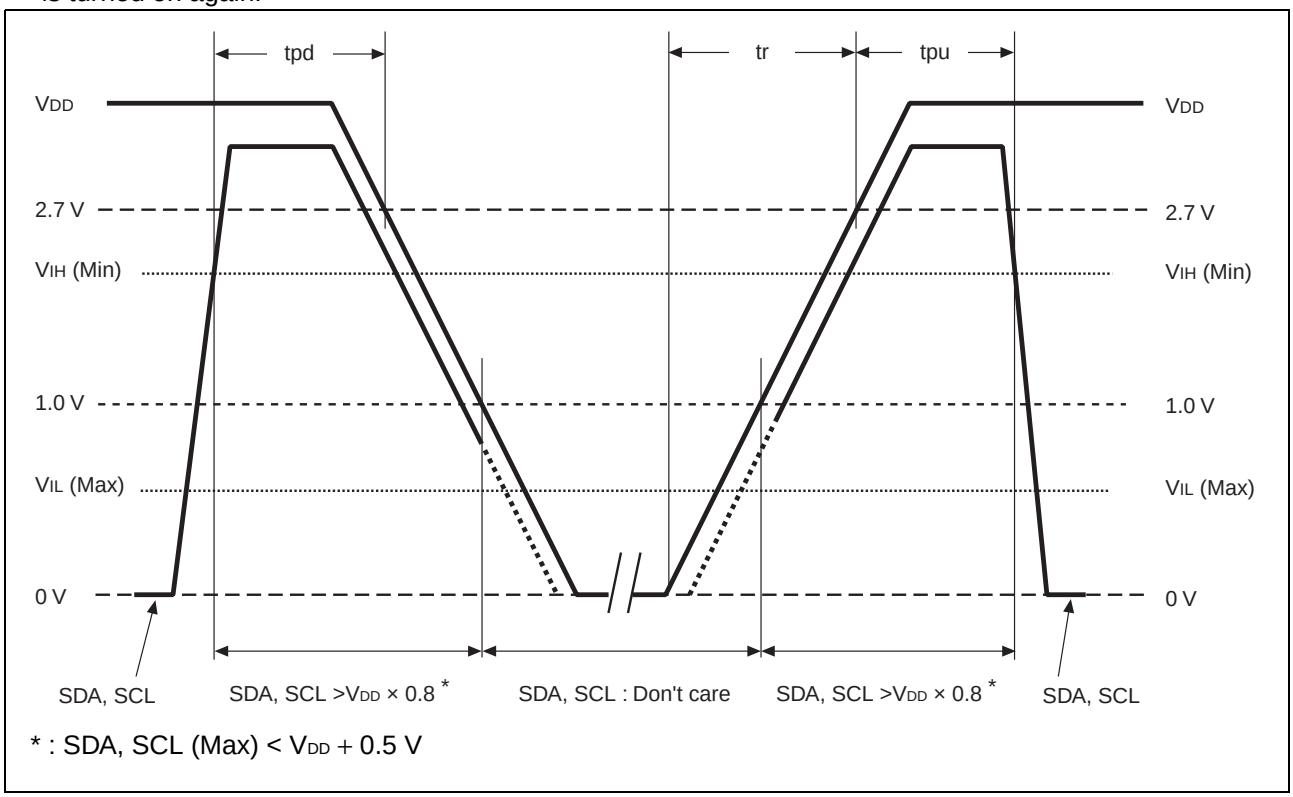

* : SDA, SCL (Max) < V_{DD} + 0.5 V

Parameter	Symbol	Value		Unit
		Min	Max	
SDA, SCL level hold time during power down	tpd	85	—	ns
SDA, SCL level hold time during power up	tpu	85	—	ns
Power supply rising time	tr	10	—	µs

If the device does not operate within the specified conditions of read cycle, write cycle or power on/off sequence, memory data can not be guaranteed.

■ FRAM CHARACTERISTICS

Item	Min	Max	Unit	Parameter
Read/Write Endurance*1	10^{12}	—	Times/byte	Operation Ambient Temperature T_A = + 85 °C
Data Retention*2	10	—	Years	Operation Ambient Temperature T_A = + 85 °C
	95	—		Operation Ambient Temperature T_A = + 55 °C
	≥ 200	—		Operation Ambient Temperature T_A = + 35 °C

*1 : Total number of reading and writing defines the minimum value of endurance, as an FRAM memory operates with destructive readout mechanism.

*2 : Minimun values define retention time of the first reading/writing data right after shipment, and these values are calculated by qualification results.

■ NOTE ON USE

- Data written before performing IR reflow is not guaranteed after IR reflow.
- During the access period from the start condition to the stop condition, keep the level of WP, A0, A1, and A2 pins to the “H” level or the “L” level.

■ ESD AND LATCH-UP

Test	DUT	Value
ESD HBM (Human Body Model) JESD22-A114 compliant	MB85RC64APNF-G-JNE1	≥ |2000 V|
ESD MM (Machine Model) JESD22-A115 compliant		≥ |200 V|
ESD CDM (Charged Device Model) JESD22-C101 compliant		—
Latch-Up (I-test) JESD78 compliant		—
Latch-Up (V_{supply} overvoltage test) JESD78 compliant		—
Latch-Up (Current Method) Proprietary method		—
Latch-Up (C-V Method) Proprietary method		—

- Current method of Latch-Up Resistance Test

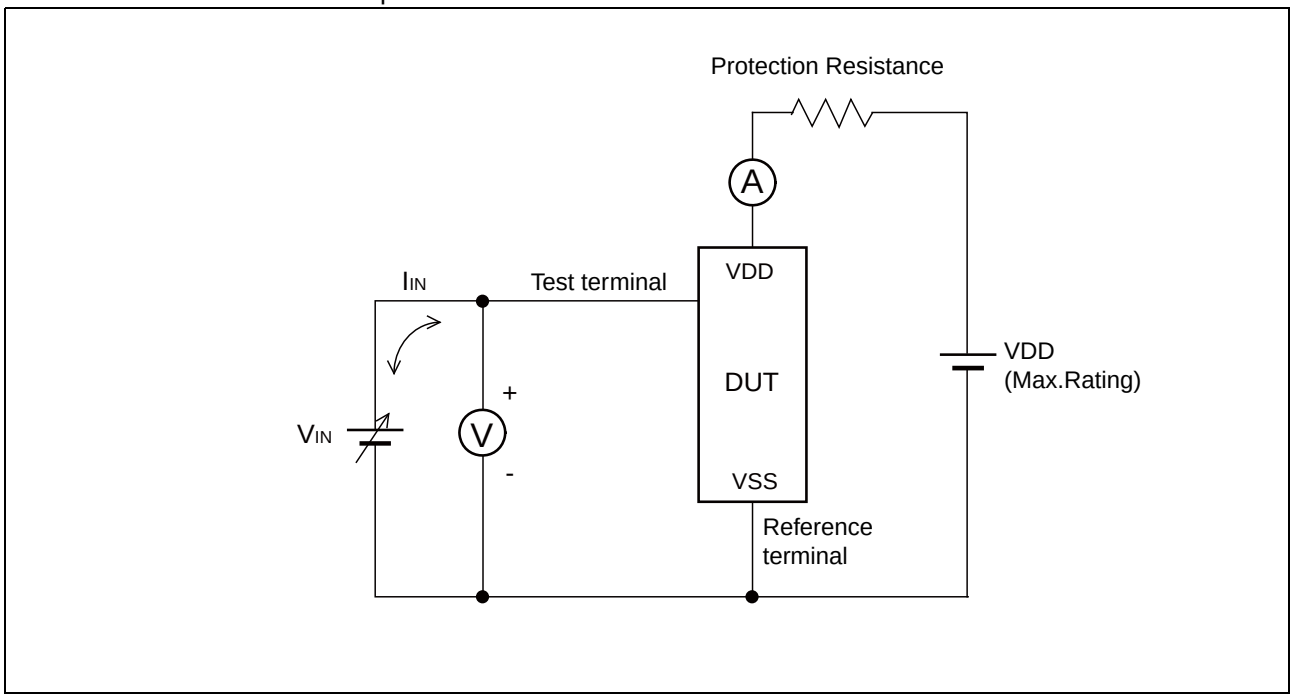

Note : The voltage V_{IN} is increased gradually and the current IIN of 300 mA at maximum shall flow. Confirm the latch up does not occur under I_{IN} = ± 300 mA.
In case the specific requirement is specified for I/O and I_{IN} cannot be 300 mA, the voltage shall be increased to the level that meets the specific requirement.

• C-V method of Latch-Up Resistance Test

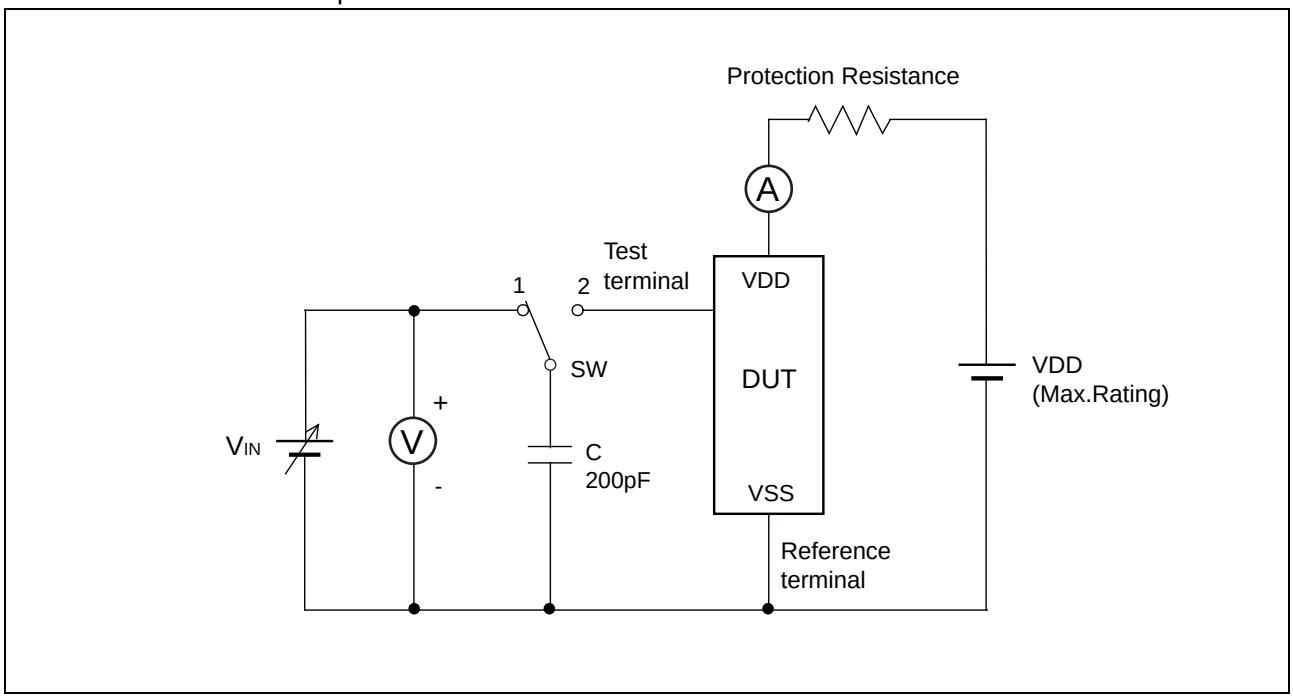

Note Charge voltage alternately switching 1 and 2 approximately 2 sec interval. This switching process is considered as one cycle.
Repeat this process 5 times. However, if the latch-up condition occurs before completing 5 times, this test must be stopped immediately.

■ REFLOW CONDITIONS AND FLOOR LIFE

Item	Condition	
Method	IR (infrared reflow) , Convection	
Times	2	
Floor life	Before unpacking	Please use within 2 years after production.
	From unpacking to 2nd reflow	Within 8 days
	In case over period of floor life	Baking with 125 °C+/-3 °C for 24hrs+2hrs/-0hrs is required. Then please use within 8 days. (Please remember baking is up to 2 times)
Floor life condition	Between 5 °C and 30 °C and also below 70%RH required. (It is preferred lower humidity in the required temp range.)	

Reflow Profile

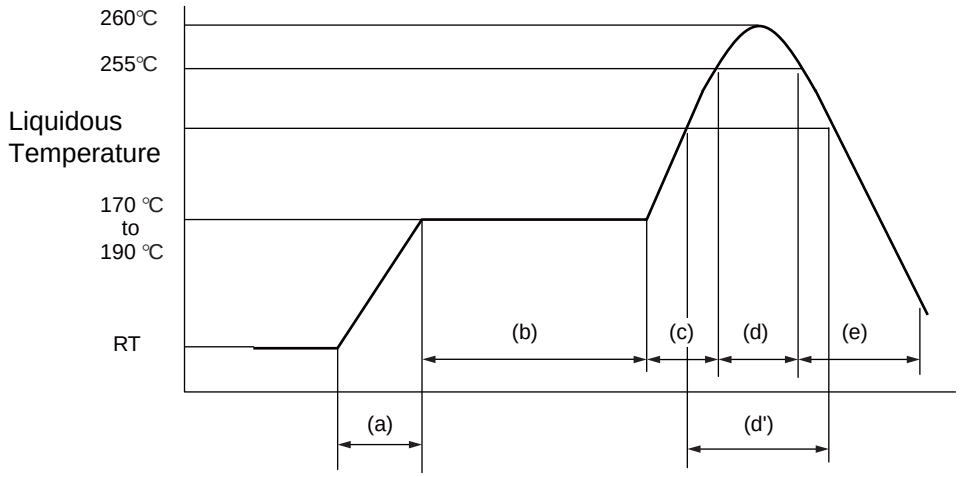

(a) Average ramp-up rate : 1 °C/s to 4 °C/s
(b) Preheat & Soak : 170 °C to 190 °C, 60 s to 180 s
(c) Average ramp-up rate : 1 °C/s to 4 °C/s
(d) Peak temperature : Temperature 260 °C Max; 255 °C within 10 s
(d') Liquidous temperature : Up to 230 °C within 40 s or
Up to 225 °C within 60 s or
Up to 220 °C within 80 s
(e) Cooling : Natural cooling or forced cooling

Note : Temperature on the top of the package body is measured.

■ RESTRICTED SUBSTANCES

This product complies with the regulations below (Based on current knowledge as of November 2011).

- EU RoHS Directive (2002/95/EC)
- China RoHS (Administration on the Control of Pollution Caused by Electronic Information Products (电子信息产品污染控制管理办法))
- Vietnam RoHS (30/2011/TT-BCT)

Restricted substances in each regulation are as follows.

Substances	Threshold	Contain status*
Lead and its compounds	1,000 ppm	❍
Mercury and its compounds	1,000 ppm	❍
Cadmium and its compounds	100 ppm	❍
Hexavalent chromium compound	1,000 ppm	❍
Polybrominated biphenyls (PBB)	1,000 ppm	❍
Polybrominated diphenyl ethers (PBDE)	1,000 ppm	❍

* : The mark of "❍" shows below a threshold value.

■ ORDERING INFORMATION

Part number	Package	Shipping form	Minimum shipping quantity
MB85RC64APNF-G-JNE1	8-pin, plastic SOP (FPT-8P-M02)	Tube	1
MB85RC64APNF-G-JNERE1	8-pin, plastic SOP (FPT-8P-M02)	Embossed Carrier tape	1500

■ PACKAGE DIMENSION

8-pin plastic SOP		
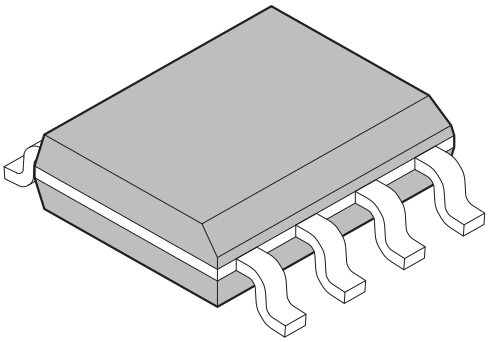	Lead pitch	1.27 mm
	Package width × package length	3.9 mm × 5.05 mm
	Lead shape	Gullwing
	Sealing method	Plastic mold
	Mounting height	1.75 mm MAX
	Weight	0.06 g
(FPT-8P-M02)		

8-pin plastic SOP
(FPT-8P-M02)

Note 1) *1 : These dimensions include resin protrusion.
Note 2) *2 : These dimensions do not include resin protrusion.
Note 3) Pins width and pins thickness include plating thickness.
Note 4) Pins width do not include tie bar cutting remainder.

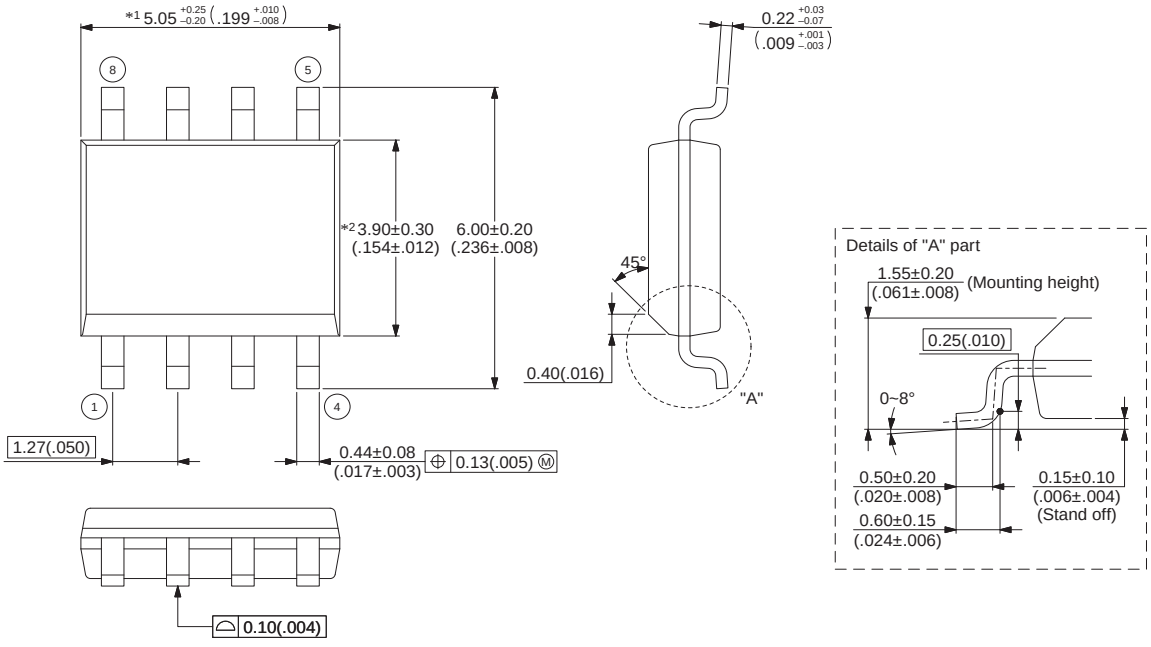

© 2002-2012 FUJITSU SEMICONDUCTOR LIMITED F08004S-c-5-10

Dimensions in mm (inches).
Note: The values in parentheses are reference values.

Please check the latest package dimension at the following URL.
http://edevice.fujitsu.com/package/en-search/

■ MARKING

[MB85RC64APNF-G-JNE1]
[MB85RC64APNF-G-JNERE1]

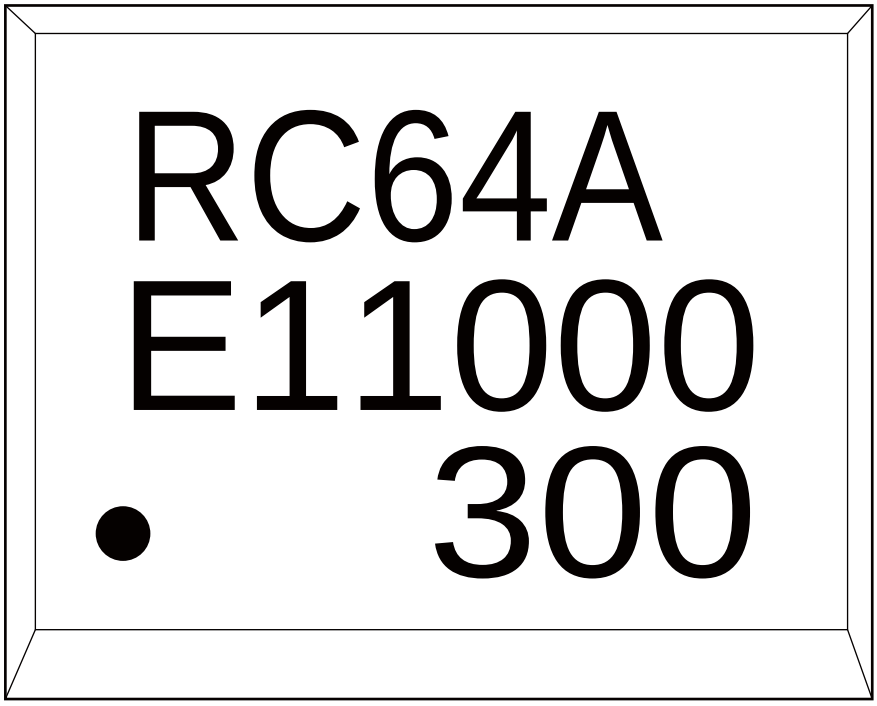

[FPT-8P-M02]

■ PACKING INFORMATION

1. Tube

1.1 Tube Dimensions

- Tube/stopper shape

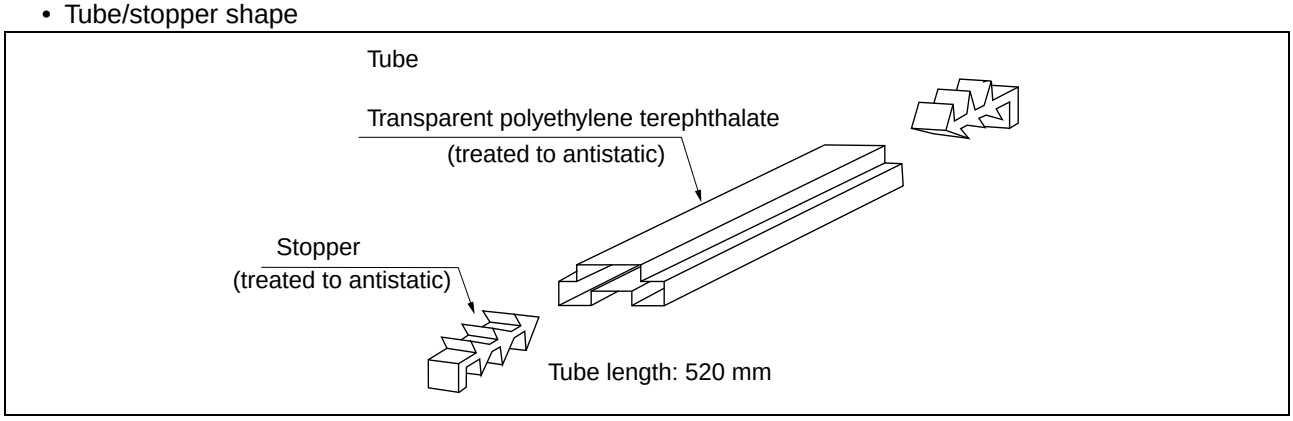

Tube cross-sections and Maximum quantity

Package form	Package code	Maximum quantity		
		pcs/ tube	pcs/inner box	pcs/outer box
SOP, 8, plastic (2)	FPT-8P-M02	95	7600	30400
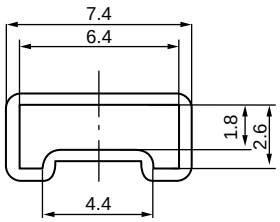 ©2006-2010 FUJITSU SEMICONDUCTOR LIMITED F08008-SET1-PET:FJ99L-0022-E0008-1-K-3 t = 0.5 Transparent polyethylene terephthalate				

(Dimensions in mm)

1.2 Tube Dry pack packing specifications

Tube Dry pack Inner box Outer box	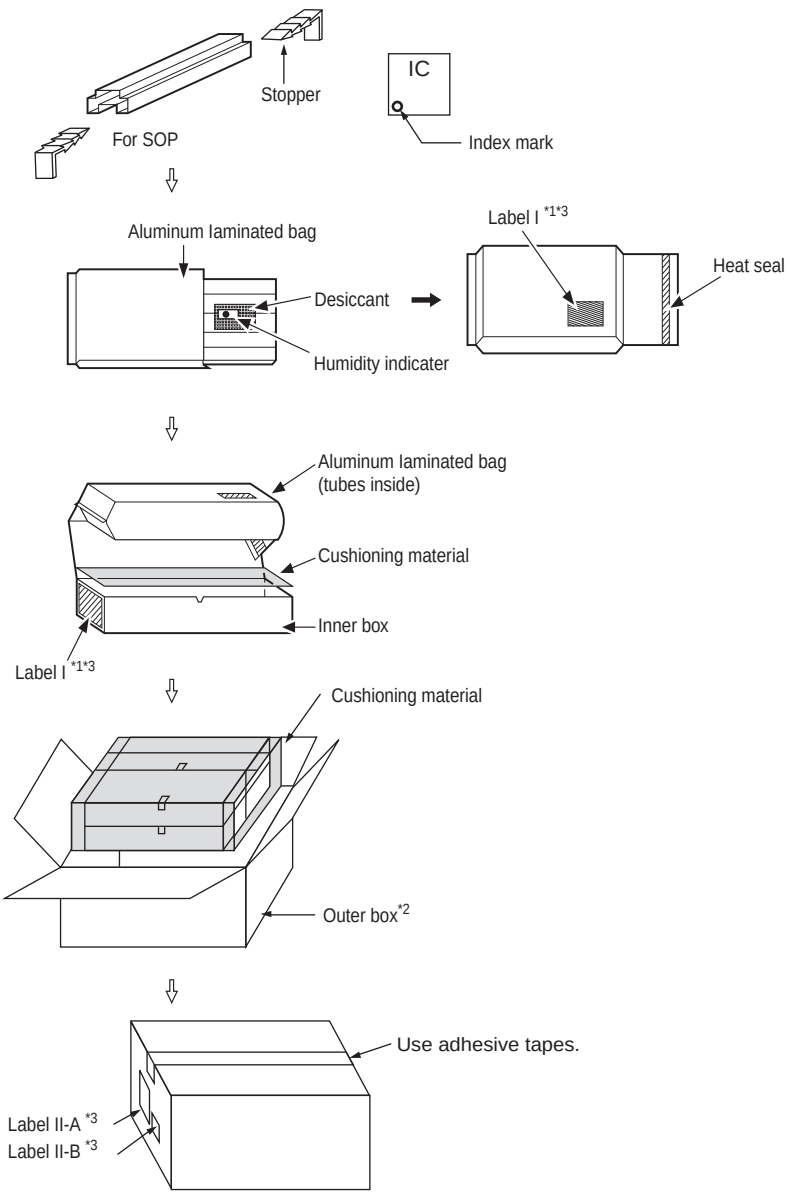

*1: For a product of witch part number is suffixed with “E1”, a “ G Pb ” marks is display to the moisture barrier bag and the inner boxes.

*2: The space in the outer box will be filled with empty inner boxes, or cushions, etc.

*3: Please refer to an attached sheet about the indication label.

Note: The packing specifications may not be applied when the product is delivered via a distributer.

1.3 Product label indicators

Label I: Label on Inner box/Moisture Barrier Bag/ (It sticks it on the reel for the emboss taping)
[C-3 Label (50mm × 100mm) Supplemental Label (20mm × 100mm)]

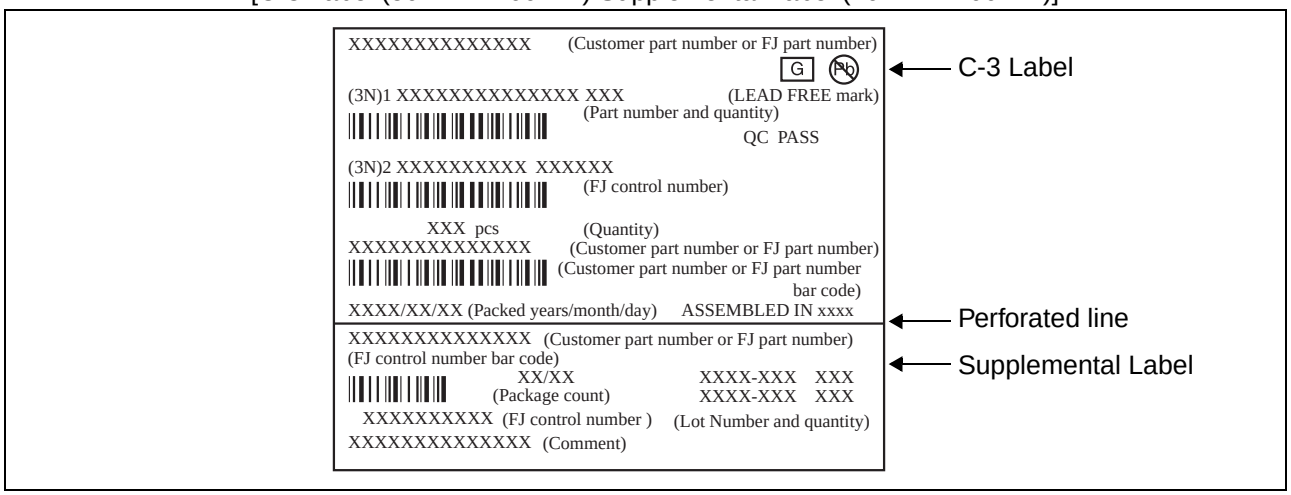

Label II-A: Label on Outer box [D Label] (100mm × 100mm)

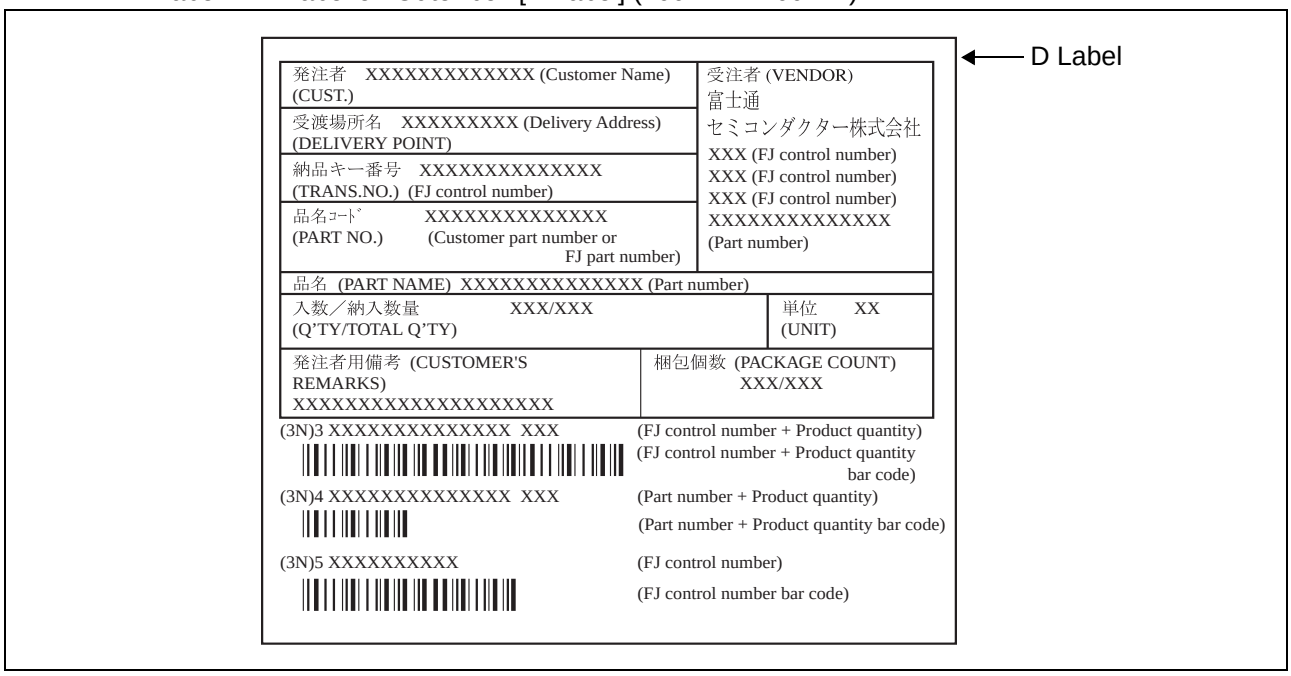

Label II-B: Outer boxes product indicate

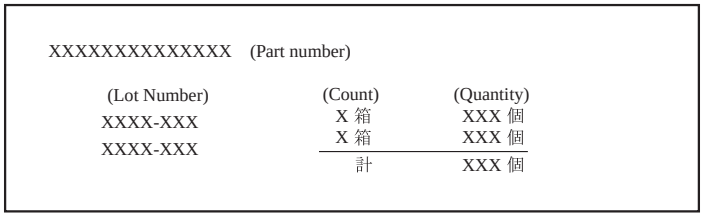

Note: Depending on shipment state, “Label II-A” and “Label II-B” on the external boxes might not be printed.

1.4 Dimensions for Containers

(1) Dimensions for inner box

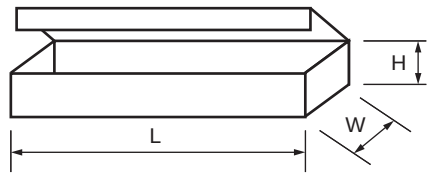

L	W	H
540	125	75

(Dimensions in mm)

(2) Dimensions for outer box

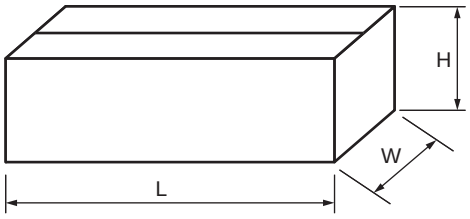

L	W	H
565	270	180

(Dimensions in mm)

2. Emboss Tape

2.1 Tape Dimensions

PKG code	Reel No	Maximum storage capacity		
		pcs/reel	pcs/inner box	pcs/outer box
FPT-8P-M02	3	1500	1500	10500

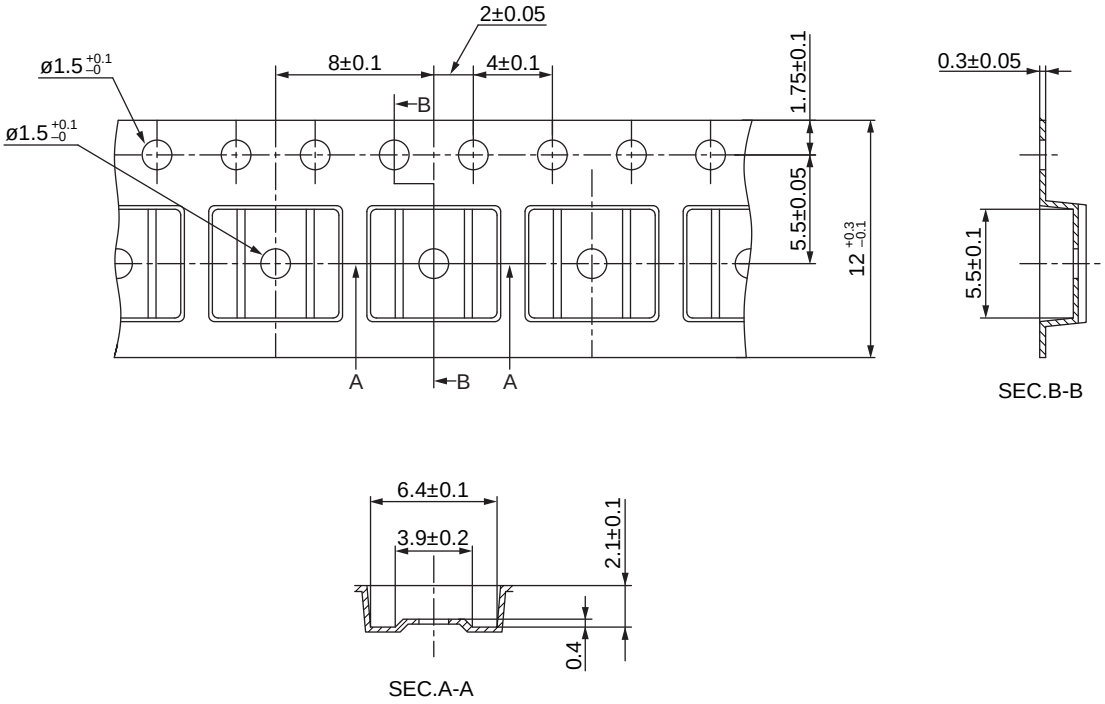

ⓒ 2012 FUJITSU SEMICONDUCTOR LIMITED SOL8-EMBOSSTAPE9 : NFME-EMB-X0084-1-P-1

(Dimensions in mm)

Material : Conductive polystyrene
Heat proof temperature : No heat resistance.
Package should not be baked by using tape and reel.

2.2 IC orientation

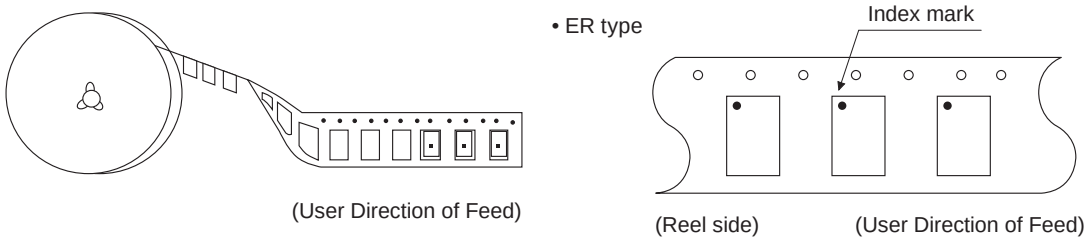

2.3 Reel dimensions

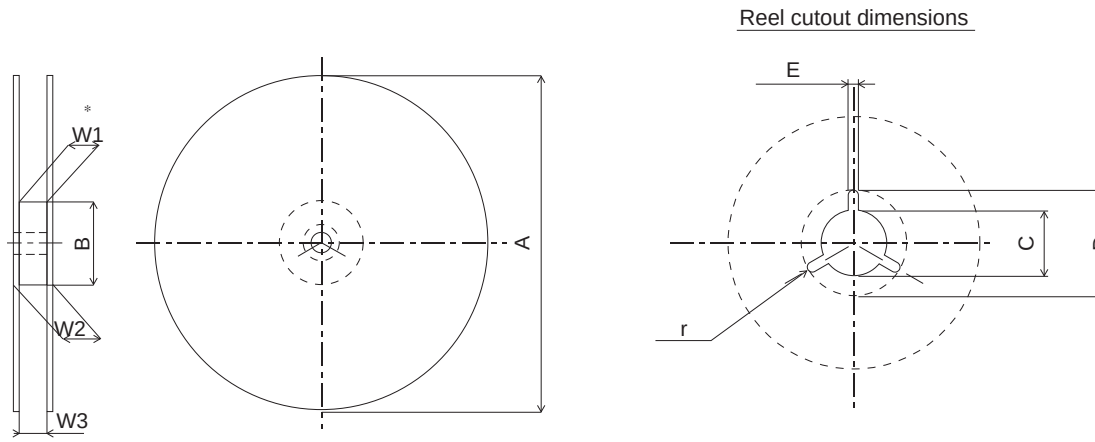

Dimensions in mm

Reel No	1	2	3	4	5	6	7	8	9	10	11	12	13	14	15
Tape width / Symbol	8	12		16		24		32		44		56	12	16	24
A	254 ± 2	254 ± 2	330 ± 2	254 ± 2	330 ± 2	254 ± 2	330 ± 2	330 ± 2							
B	100^{+2}_{-0}							100^{+2}_{-0}	150^{+2}_{-0}	100^{+2}_{-0}	150^{+2}_{-0}	100^{+2}_{-0}	100 ± 2		
C	13 ± 0.2												$13^{+0.5}_{-0.2}$		
D	21 ± 0.8												$20.5^{+1}_{-0.2}$		
E	2 ± 0.5														
W1	8.4^{+2}_{-0}	12.4^{+2}_{-0}		16.4^{+2}_{-0}		24.4^{+2}_{-0}		32.4^{+2}_{-0}		44.4^{+2}_{-0}		56.4^{+2}_{-0}	12.4^{+1}_{-0}	16.4^{+1}_{-0}	$24.4^{+0.1}_{-0}$
W2	less than 14.4	less than 18.4		less than 22.4		less than 30.4		less than 38.4		less than 50.4		less than 62.4	less than 18.4	less than 22.4	less than 30.4
W3	7.9 ~ 10.9	11.9 ~ 15.4		15.9 ~ 19.4		23.9 ~ 27.4		31.9 ~ 35.4		43.9 ~ 47.4		55.9 ~ 59.4	12.4 ~ 14.4	16.4 ~ 18.4	24.4 ~ 26.4
r	1.0														

2.4 Taping (ϕ330mm Reel) Dry Pack Packing Specifications

Embossed tapes	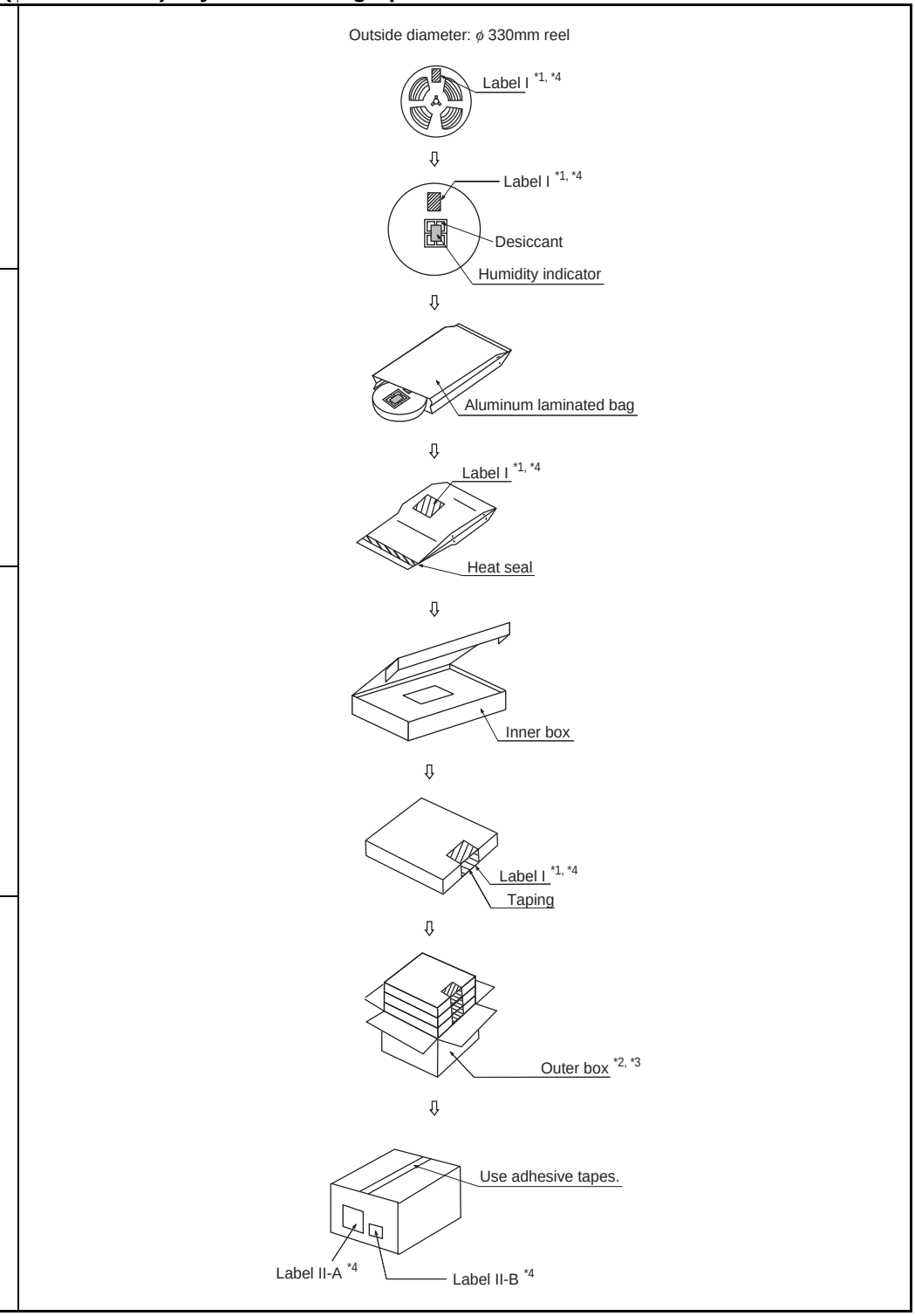
Dry pack	
Inner box	
Outer box	

*1: For a product of witch part number is suffixed with “E1”, a “ G Pb ” marks is display to the moisture barrier bag and the inner boxes.

*2: The size of the outer box may be changed depending on the quantity of inner boxes.

*3: The space in the outer box will be filled with empty inner boxes, or cushions, etc.

*4: Please refer to an attached sheet about the indication label.

Note: The packing specifications may not be applied when the product is delivered via a distributer.

2.5 Product label indicators

Label I: Label on Inner box/Moisture Barrier Bag/ (It sticks it on the reel for the emboss taping)
[C-3 Label (50mm × 100mm) Supplemental Label (20mm × 100mm)]

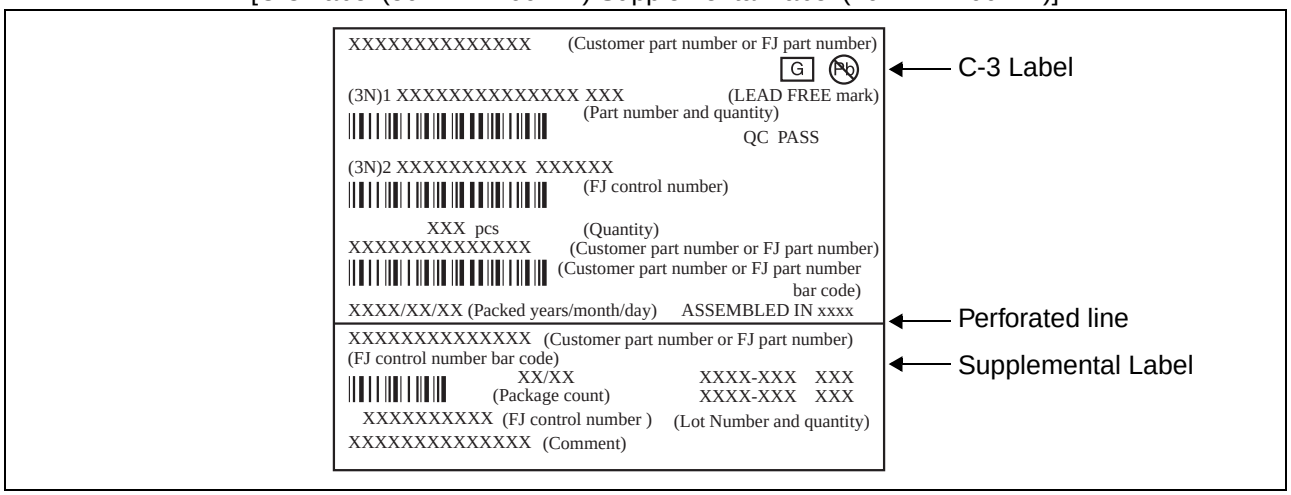

Label II-A: Label on Outer box [D Label] (100mm × 100mm)

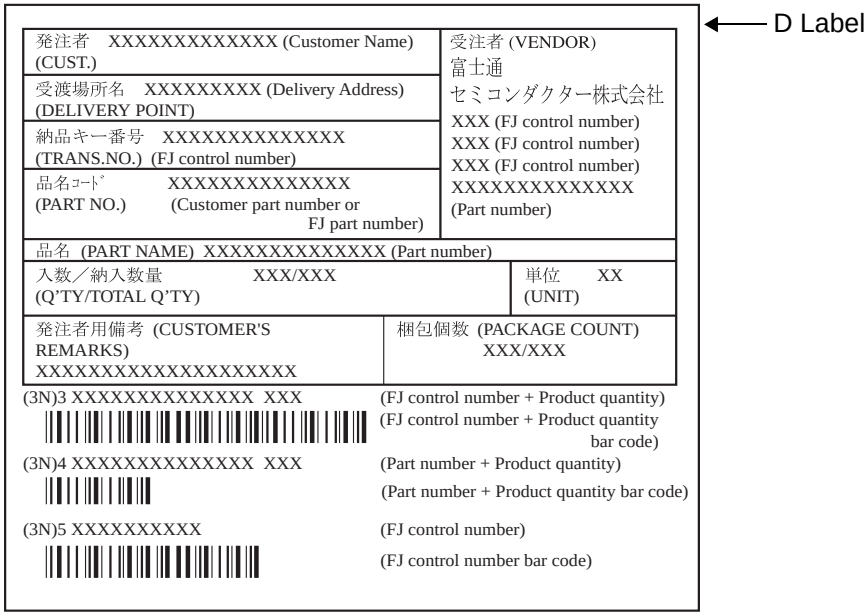

Label II-B: Outer boxes product indicate

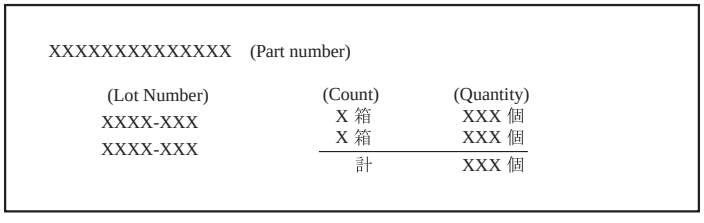

Note: Depending on shipment state, “Label II-A” and “Label II-B” on the external boxes might not be printed.

2.6 Dimensions for Containers

(1) Dimensions for inner box

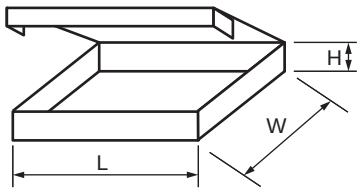

Tape width	L	W	H
12, 16	365	345	40
24, 32			50
44			65
56			75

(Dimensions in mm)

(2) Dimensions for outer box

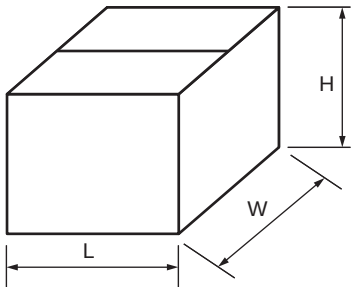

L	W	H
415	400	315

(Dimensions in mm)

■ MAJOR CHANGES IN THIS EDITION

A change on a page is indicated by a vertical line drawn on the left side of that page.

Page	Section	Change Results
1	■ FEATURES	Revised the Data retention 10 years (+ 85 °C) →10 years (+ 85 °C), 95 years (+ 55 °C), over 200 years (+ 35 °C)
14	■ POWER ON/OFF SEQUENCE	Revised the following description: “POWER ON SEQUENCE” → “POWER ON/OFF SEQUENCE” Added the following description: “If the device does not operate within the specified conditions of read cycle, write cycle or power on/off sequence, memory data can not be guaranteed.” Revised the following description: “V_{DD} pin is required to be rising from 0 V because turning the power on from an intermediate level may cause malfunctions, when the power is turned on” →“If V_{DD} falls down below 2.0V, V_{DD} is required to be started from 0V to prevent malfunctions when the power is turned on again.”
	■ FRAM CHARACTERISTICS	Revised the table and Note

FUJITSU SEMICONDUCTOR LIMITED

Nomura Fudosan Shin-yokohama Bldg. 10-23, Shin-yokohama 2-Chome,
Kohoku-ku Yokohama Kanagawa 222-0033, Japan
Tel: +81-45-415-5858
http://jp.fujitsu.com/fsl/en/

For further information please contact:

North and South America
FUJITSU SEMICONDUCTOR AMERICA, INC.
1250 E. Arques Avenue, M/S 333
Sunnyvale, CA 94085-5401, U.S.A.
Tel: +1-408-737-5600 Fax: +1-408-737-5999
http://us.fujitsu.com/micro/

Europe
FUJITSU SEMICONDUCTOR EUROPE GmbH
Pittlerstrasse 47, 63225 Langen, Germany
Tel: +49-6103-690-0 Fax: +49-6103-690-122
http://emea.fujitsu.com/semiconductor/

Korea
FUJITSU SEMICONDUCTOR KOREA LTD.
902 Kosmo Tower Building, 1002 Daechi-Dong,
Gangnam-Gu, Seoul 135-280, Republic of Korea
Tel: +82-2-3484-7100 Fax: +82-2-3484-7111
http://kr.fujitsu.com/fsk/

Asia Pacific
FUJITSU SEMICONDUCTOR ASIA PTE. LTD.
151 Lorong Chuan,
#05-08 New Tech Park 556741 Singapore
Tel : +65-6281-0770 Fax : +65-6281-0220
http://sg.fujitsu.com/semiconductor/

FUJITSU SEMICONDUCTOR SHANGHAI CO., LTD.
30F, Kerry Parkside, 1155 Fang Dian Road, Pudong District,
Shanghai 201204, China
Tel : +86-21-6146-3688 Fax : +86-21-6146-3660
http://cn.fujitsu.com/fss/

FUJITSU SEMICONDUCTOR PACIFIC ASIA LTD.
2/F, Green 18 Building, Hong Kong Science Park,
Shatin, N.T., Hong Kong
Tel : +852-2736-3232 Fax : +852-2314-4207
http://cn.fujitsu.com/fsp/

Specifications are subject to change without notice. For further information please contact each office.

All Rights Reserved.
The contents of this document are subject to change without notice.
Customers are advised to consult with sales representatives before ordering.
The information, such as descriptions of function and application circuit examples, in this document are presented solely for the purpose of reference to show examples of operations and uses of FUJITSU SEMICONDUCTOR device; FUJITSU SEMICONDUCTOR does not warrant proper operation of the device with respect to use based on such information. When you develop equipment incorporating the device based on such information, you must assume any responsibility arising out of such use of the information.
FUJITSU SEMICONDUCTOR assumes no liability for any damages whatsoever arising out of the use of the information.
Any information in this document, including descriptions of function and schematic diagrams, shall not be construed as license of the use or exercise of any intellectual property right, such as patent right or copyright, or any other right of FUJITSU SEMICONDUCTOR or any third party or does FUJITSU SEMICONDUCTOR warrant non-infringement of any third-party's intellectual property right or other right by using such information. FUJITSU SEMICONDUCTOR assumes no liability for any infringement of the intellectual property rights or other rights of third parties which would result from the use of information contained herein.
The products described in this document are designed, developed and manufactured as contemplated for general use, including without limitation, ordinary industrial use, general office use, personal use, and household use, but are not designed, developed and manufactured as contemplated (1) for use accompanying fatal risks or dangers that, unless extremely high safety is secured, could have a serious effect to the public, and could lead directly to death, personal injury, severe physical damage or other loss (i.e., nuclear reaction control in nuclear facility, aircraft flight control, air traffic control, mass transport control, medical life support system, missile launch control in weapon system), or (2) for use requiring extremely high reliability (i.e., submersible repeater and artificial satellite).
Please note that FUJITSU SEMICONDUCTOR will not be liable against you and/or any third party for any claims or damages arising in connection with above-mentioned uses of the products.
Any semiconductor devices have an inherent chance of failure. You must protect against injury, damage or loss from such failures by incorporating safety design measures into your facility and equipment such as redundancy, fire protection, and prevention of over-current levels and other abnormal operating conditions.
Exportation/release of any products described in this document may require necessary procedures in accordance with the regulations of the Foreign Exchange and Foreign Trade Control Law of Japan and/or US export control laws.
The company names and brand names herein are the trademarks or registered trademarks of their respective owners.

Edited: Sales Promotion Department

Unikeyic Electronics

Global Electronic Components Distributor

Click to view pricing, inventory, delivery, and lifecycle information:

FUJITSU:

FTR-K3AB012W-HC JS-12N-K FTR-B3GA4.5Z FTR-B3SA003Z-B-10 FTR-B3SA006Z FTR-B4CA024Z FTR-C1CA003G FTR-F1CA024V FTR-LYCA024Y FTR-B3GA024Z-B-10 FTR-B3GA012Z JV-24SKT JV-3SKT NA-3W-K FTR-K1AK012T JS-18-K RY-48W-K FCN-268M036-G/1D FTR-H2AK012T FBR53ND12-Y-HW FTR-B4CB006Z FTR-K1CK005W FTR-K1CK024W FTR-K3AB005W FTR-P3CN010W1 RY-6W-K SY-12-K FTR-B4CA003Z FTR-F1CL012R FTR-K1CK012W-RG