

YLUX013XQG



YLUX013XQH



YLUX013XQJ

RF Cable Datasheet

Product OC: YLUX013XQG & YLUX013XQH & YLUX013XQJ
Version: 1.1
Date: 2025-07-14
Status: Released

Product Name: RF Cable
Key Features:
Frequency Band: DC–6000 MHz
Cable Length: 2700 mm
Connector Type: SMA Male to SMA Female
RoHS and REACH Compliant

Overview

To meet the requirements of devices for RF connection among antennas, modules, and motherboards, as well as long-distance wiring, Quectel provides customers with a wide range of RF cable products. These cables use high-quality materials and connectors to reduce the loss to the greatest extent, ensuring overall RF performance. Quectel also provides customized services according to customers' particular requirements for cable material, cable length, and connector type.

Contents

Overview **1**
Contents **2**

1 Specification **3**
1.1. Electrical 3
1.2. Mechanical & Environmental 4

2 Drawing **5**

3 Detailed Performance **6**
3.1. Cable Loss 6
3.2. VSWR 7
3.3. Return Loss 8

4 Packaging **9**

Contact Us **11**
Legal Notices **12**
Revision History **14**

1 Specification

1.1. Electrical

Electrical	
Frequency Range	DC–6000 MHz
Impedance	50 Ω
VSWR	≤ 1.13
Return Loss	≤ -24.11 dB
Max Cable Loss	-2.50 dB

Electrical – Detail

Band / SPEC	B87 /B88	B31 /B72 /B73	B71	B12 /B13 /B28	B5 /B8 /B26	n74 /n75 /n76	B1 /B2 /B3	B40	Wi-Fi 2G	B38 /B41	B42 /B48 /n77	n79	Wi-Fi 5G
	410-430	450-470	600–700	700–810	820–960	1420–1520	1700–2170	2300–2400	2400–2500	2500–2690	3300–4200	4400–5000	5150–5850
Max S11 VSWR	1.02	1.02	1.02	1.03	1.03	1.05	1.07	1.07	1.09	1.08	1.13	1.13	1.10
Max S22 VSWR	1.02	1.02	1.02	1.03	1.03	1.05	1.08	1.07	1.08	1.08	1.10	1.10	1.13
Max S11 Return Loss (dB)	-42.25	-40.63	-40.67	-37.97	-37.75	-32.19	-29.17	-29.13	-27.00	-28.65	-24.11	-24.28	-26.48
Max S22 Return Loss (dB)	-41.34	-40.35	-40.34	-37.09	-36.61	-32.33	-28.55	-29.24	-28.01	-27.98	-26.52	-26.32	-24.25
Max Cable Loss S21 (dB)	-0.57	-0.60	-0.75	-0.81	-0.90	-1.15	-1.39	-1.48	-1.51	-1.56	-2.05	-2.26	-2.50

Max Cable Loss S12 (dB)	-0.57	-0.60	-0.75	-0.82	-0.90	-1.15	-1.40	-1.47	-1.52	-1.59	-2.05	-2.26	-2.47

1.2. Mechanical & Environmental

Mechanical		
Cable Type & Color & Length	ALSR200 & Black & 2700 mm	
Item	**Material**	**Diameter (mm)**
Inner Conductor	Bare copper	1.12 ±0.02
Insulator	PE	2.95 ±0.10
Outer Conductor	Tinned copper wire	3.60 ±0.15
Jacket	PVC	5.00 ±0.10
Connector Type	SMA Male to SMA Female	
Weight	Typ. 107 g	
Environmental		
Operation Temperature	-40 °C to +85 °C	
Storage Temperature	-40 °C to +85 °C	
RoHS and REACH Compliant	Yes	

2 Drawing

YLUX013XQG

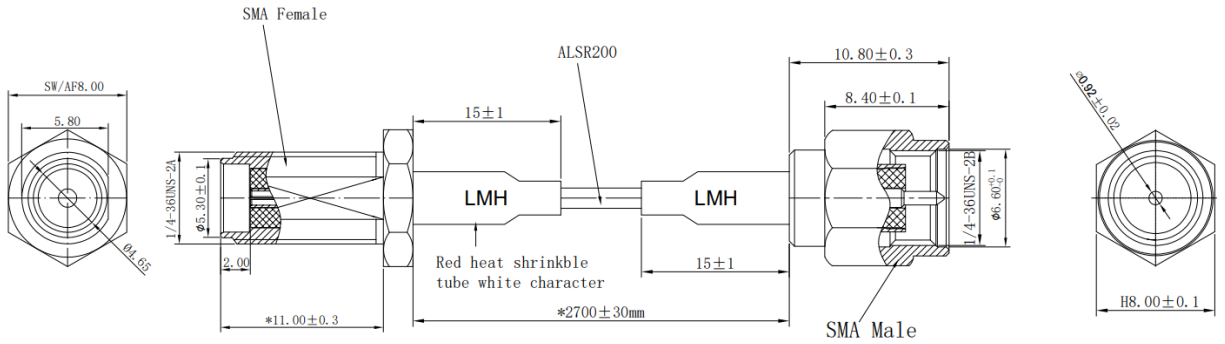

YLUX013XQH

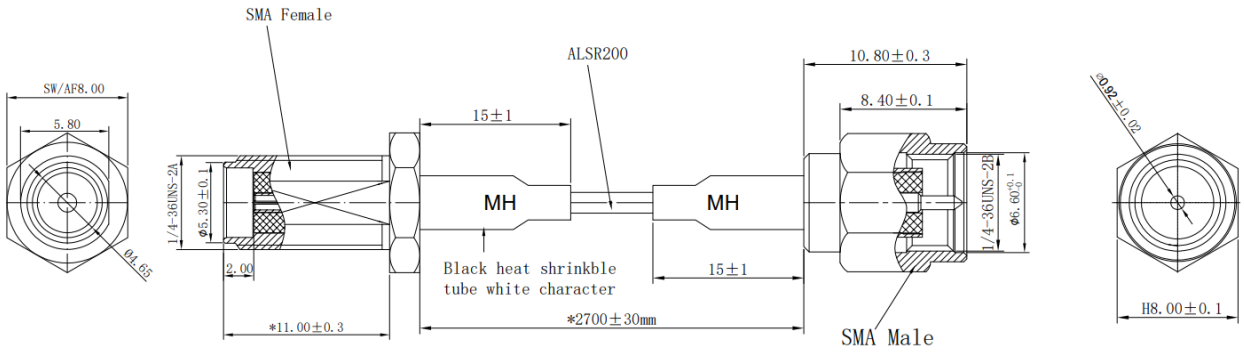

YLUX013XQJ

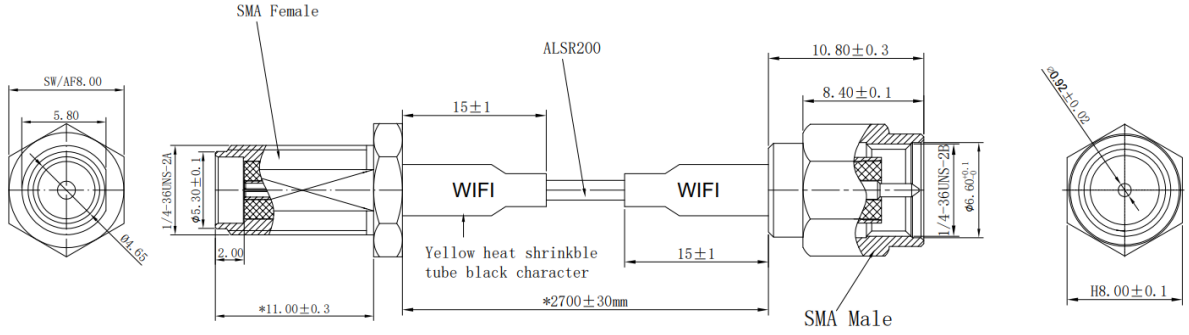

3 Detailed Performance

3.1. Cable Loss

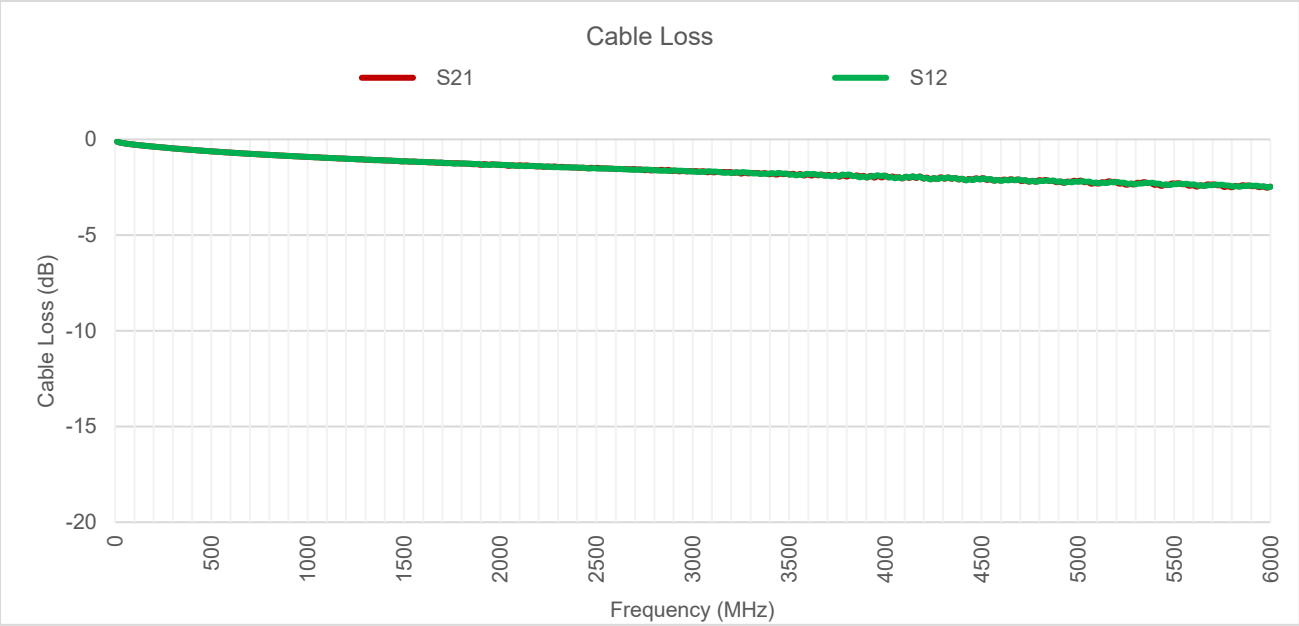

Cable Loss (dB)

Frequency (MHz)	100	300	410	420	460	470	600	630	710	830
S21	-0.27	-0.47	-0.56	-0.56	-0.60	-0.60	-0.69	-0.71	-0.76	-0.82
S12	-0.27	-0.47	-0.56	-0.57	-0.59	-0.60	-0.69	-0.71	-0.76	-0.83
Frequency (MHz)	**900**	**960**	**1440**	**1710**	**1740**	**1880**	**1950**	**2140**	**2350**	**2450**
S21	-0.86	-0.90	-1.12	-1.24	-1.24	-1.29	-1.31	-1.36	-1.45	-1.51
S12	-0.86	-0.90	-1.11	-1.22	-1.24	-1.28	-1.34	-1.39	-1.45	-1.50
Frequency (MHz)	**2600**	**3600**	**4700**	**5000**	**5500**	**6000**				
S21	-1.55	-1.82	-2.15	-2.19	-2.31	-2.47				

S12	-1.54	-1.80	-2.11	-2.21	-2.33	-2.48				

3.2. VSWR

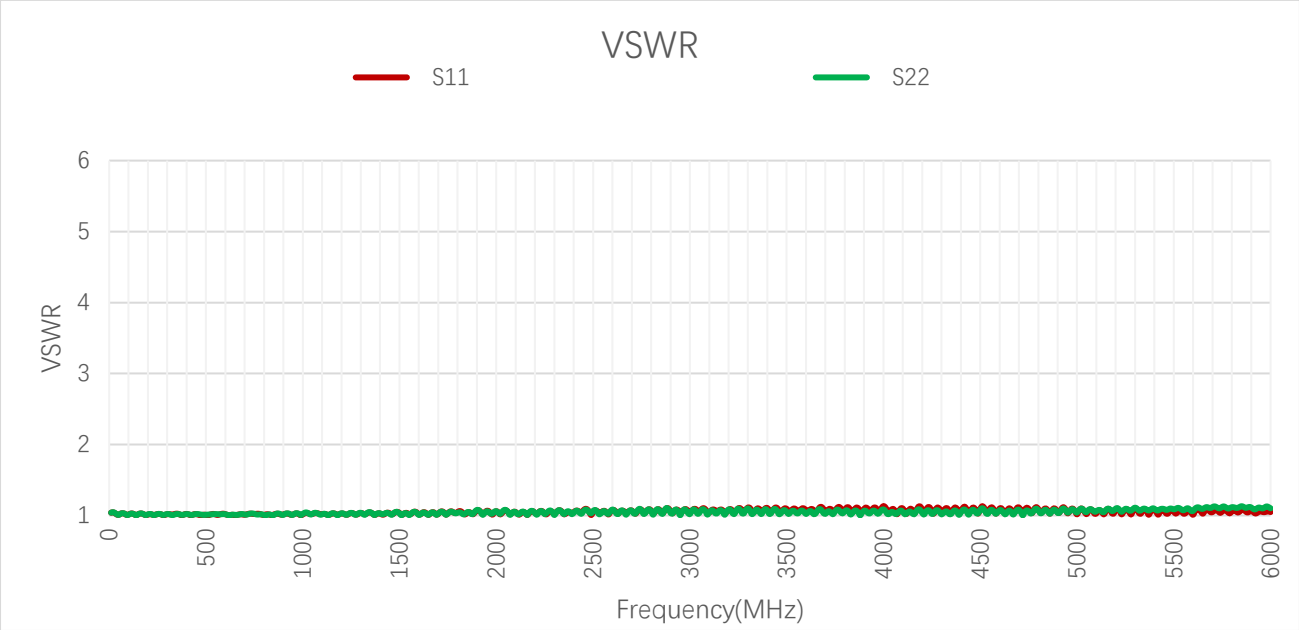

VSWR

Frequency (MHz)	**100**	**300**	**410**	**420**	**460**	**470**	**600**	**630**	**710**	**830**
S11	1.01	1.02	1.02	1.00	1.01	1.00	1.02	1.01	1.02	1.01
S22	1.01	1.02	1.02	1.01	1.02	1.01	1.02	1.01	1.01	1.01
Frequency (MHz)	**900**	**960**	**1440**	**1710**	**1740**	**1880**	**1950**	**2140**	**2350**	**2450**
S11	1.02	1.02	1.04	1.05	1.01	1.02	1.07	1.05	1.02	1.07
S22	1.01	1.03	1.04	1.05	1.01	1.02	1.06	1.05	1.02	1.06
Frequency (MHz)	**2600**	**3600**	**4700**	**5000**	**5500**	**6000**				
S11	1.08	1.08	1.11	1.02	1.05	1.05				
S22	1.08	1.02	1.08	1.04	1.09	1.10				

3.3. Return Loss

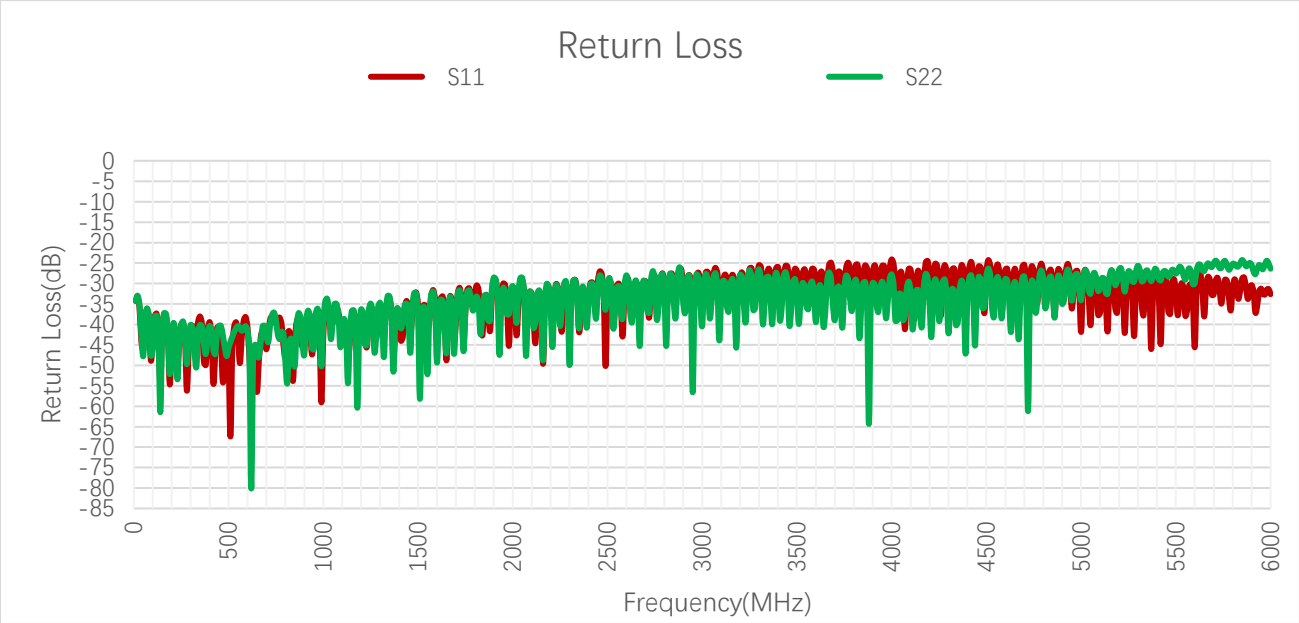

Return Loss (dB)

Frequency (MHz)	100	300	410	420	460	470	600	630	710	830
S11	-43.60	-40.79	-42.25	-54.49	-44.22	-54.10	-40.67	-47.55	-42.08	-45.06
S22	-46.13	-40.11	-41.34	-46.28	-40.39	-42.68	-41.44	-47.40	-44.27	-43.47
Frequency (MHz)	**900**	**960**	**1440**	**1710**	**1740**	**1880**	**1950**	**2140**	**2350**	**2450**
S11	-42.41	-38.24	-34.24	-32.39	-44.88	-41.68	-30.01	-32.04	-41.82	-29.09
S22	-47.45	-37.57	-34.98	-32.40	-46.57	-39.15	-31.03	-31.69	-40.96	-30.78
Frequency (MHz)	**2600**	**3600**	**4700**	**5000**	**5500**	**6000**				
S11	-28.65	-28.78	-25.41	-41.85	-31.73	-32.60				
S22	-27.98	-39.46	-28.27	-34.07	-27.58	-26.37				

4 Packaging

- **YLUX013XQG**
- **YLUX013XQH**
- **YLUX013XQJ**

Step	Packaging Picture / 2D Picture	Description
1	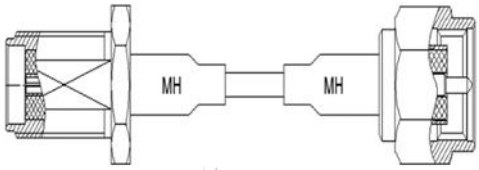	Product drawing
2	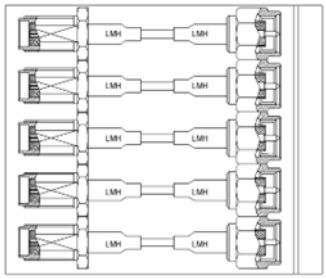	5 antenna products in a PE bag.
3	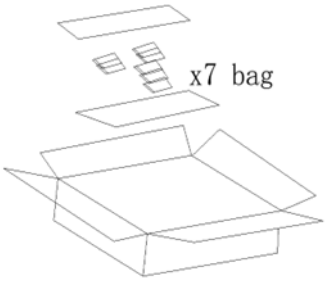	(7 PE Bags / Carton Box) (35 Antennas / Carton Box) Estimated quantity Products that cannot fill the entire carton box are packed in a suitable size carton box. Carton Size: L × W × H = 325 × 325 × 200 mm
4	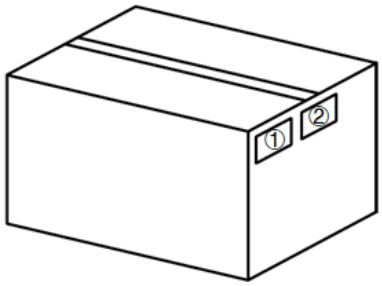	**Position for Attaching Labels** ① Carton Label ② Quality Label

5	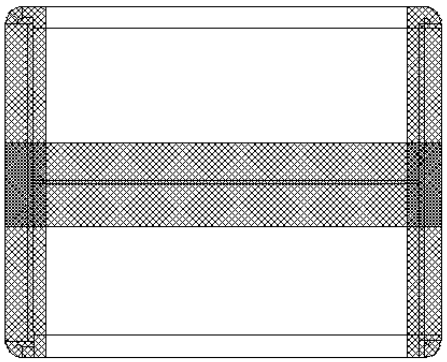	**Sealing Cartons** H-shaped sealing cartons
Note	The initial packaging method described above is for reference only, and the final actual packaging method shall be subject to the actual shipping packaging.	

Contact Us

At Quectel, our aim is to provide timely and comprehensive services to our customers. If you require any assistance, please contact our headquarters:

Quectel Wireless Solutions Co., Ltd.
Building 5, Shanghai Business Park Phase III (Area B), No.1016 Tianlin Road, Minhang District, Shanghai 200233, China
Tel: +86 21 5108 6236
Email: info@quectel.com

Or our local offices. For more information, please visit:
http://www.quectel.com/support/sales.htm.

For technical support, or to report documentation errors, please visit:
http://www.quectel.com/support/technical.htm.
Or email us at: support@quectel.com.

Legal Notices

We offer information as a service to you. The provided information is based on your requirements and we make every effort to ensure its quality. You agree that you are responsible for using independent analysis and evaluation in designing intended products, and we provide reference designs for illustrative purposes only. Before using any hardware, software or service guided by this document, please read this notice carefully. Even though we employ commercially reasonable efforts to provide the best possible experience, you hereby acknowledge and agree that this document and related services hereunder are provided to you on an “as available” basis. We may revise or restate this document from time to time at our sole discretion without any prior notice to you.

Use and Disclosure Restrictions

License Agreements

Documents and information provided by us shall be kept confidential, unless specific permission is granted. They shall not be accessed or used for any purpose except as expressly provided herein.

Copyright

Our and third-party products hereunder may contain copyrighted material. Such copyrighted material shall not be copied, reproduced, distributed, merged, published, translated, or modified without prior written consent. We and the third party have exclusive rights over copyrighted material. No license shall be granted or conveyed under any patents, copyrights, trademarks, or service mark rights. To avoid ambiguities, purchasing in any form cannot be deemed as granting a license other than the normal non-exclusive, royalty-free license to use the material. We reserve the right to take legal action for noncompliance with abovementioned requirements, unauthorized use, or other illegal or malicious use of the material.

Trademarks

Except as otherwise set forth herein, nothing in this document shall be construed as conferring any rights to use any trademark, trade name or name, abbreviation, or counterfeit product thereof owned by Quectel or any third party in advertising, publicity, or other aspects.

Third-Party Rights

This document may refer to hardware, software and/or documentation owned by one or more third parties (“third-party materials”). Use of such third-party materials shall be governed by all restrictions and obligations applicable thereto.

We make no warranty or representation, either express or implied, regarding the third-party materials, including but not limited to any implied or statutory, warranties of merchantability or fitness for a particular purpose, quiet enjoyment, system integration, information accuracy, and non-infringement of any third-party intellectual property rights with regard to the licensed technology or use thereof. Nothing herein constitutes a representation or warranty by us to either develop, enhance, modify, distribute, market, sell, offer for sale, or otherwise maintain production of any our products or any other hardware, software, device, tool, information, or product. We moreover disclaim any and all warranties arising from the course of dealing or usage of trade.

Privacy Policy

To implement module functionality, certain device data are uploaded to Quectel's or third-party's servers, including carriers, chipset suppliers or customer-designated servers. Quectel, strictly abiding by the relevant laws and regulations, shall retain, use, disclose or otherwise process relevant data for the purpose of performing the service only or as permitted by applicable laws. Before data interaction with third parties, please be informed of their privacy and data security policy.

Disclaimer

a) We acknowledge no liability for any injury or damage arising from the reliance upon the information.
b) We shall bear no liability resulting from any inaccuracies or omissions, or from the use of the information contained herein.
c) While we have made every effort to ensure that the functions and features under development are free from errors, it is possible that they could contain errors, inaccuracies, and omissions. Unless otherwise provided by valid agreement, we make no warranties of any kind, either implied or express, and exclude all liability for any loss or damage suffered in connection with the use of features and functions under development, to the maximum extent permitted by law, regardless of whether such loss or damage may have been foreseeable.
d) We are not responsible for the accessibility, safety, accuracy, availability, legality, or completeness of information, advertising, commercial offers, products, services, and materials on third-party websites and third-party resources.

Copyright © Quectel Wireless Solutions Co., Ltd. 2025. All rights reserved.

Revision History

Version	Date	Author	Note
-	2023-11-10	Andy YAN/ Lucky FENG/ David LIU/ Aria CHU	Creation of the document
1.0	2023-11-10	Andy YAN/ Lucky FENG/ David LIU/ Aria CHU	First official release
1.1	2025-07-14	Aria CHU	Updated the antenna image (Cover page).



www.quectel.com