1 Product Identification

GDCD	7850	-	2R2	M	T	F
①	②		③	④	⑤	⑥

① Product Symbol

② Dimensions（See two）

③ Inductance Value (2R2:2.2μH)

④ Inductance Tolerance (J:±5%;K:±10%; M:±20%; N:±30%)

⑤ Packaging Style (B: Bulk; T: Tape & Reel)

⑥ Lead Free

2 Appearance, Dimensions(mm)

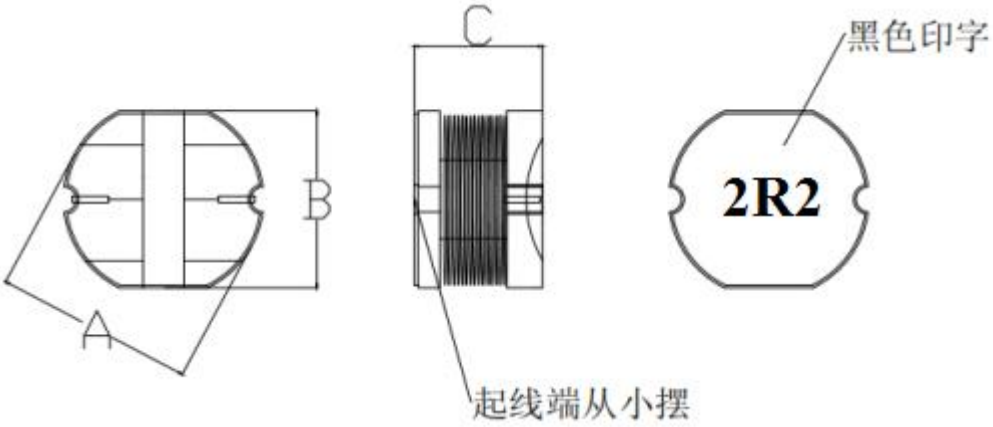

A	B	C
7.8±0.3	7.0±0.3	5.0±0.3

LAND PATTERN DIMENSIONS

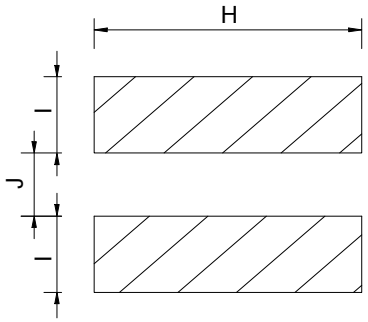

/	mm
H	7.5
I	3.0
J	2.0

3 Specifications

Part No.	Inductance L0(uH)	L Test Freq.	RDC (mΩ)Max	Rated Current (A)Max
GDCD7850-2R2MTF	2.2±20%	100KHz, 0.3V	28	4.5
GDCD7850-680KTF	68±10%	1KHz, 0.3V	280	0.85
GDCD7850-820KTF	82±10%	1KHz, 0.3V	370	0.78
GDCD7850-101KTF	100±10%	1KHz, 0.3V	430	0.72

※ Note

*Rated current is the DC current that reduces the initial inductance by 30% or when the temperature rises △ T = 40℃

4 Packaging

(1) Dimensions of Reel（mm）

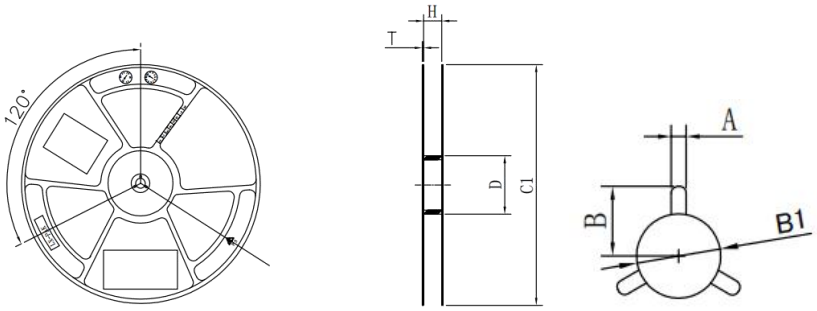

	Size（mm）
C1	330 ± 3.0
H	16.8 ± 0.5
A	2.5± 0.3
B	10.75 ± 0.3
B1	13+0.5/-0.2
T	2.0 ± 0.2
D	100±1.0

(2) Dimensions of Tape (mm):

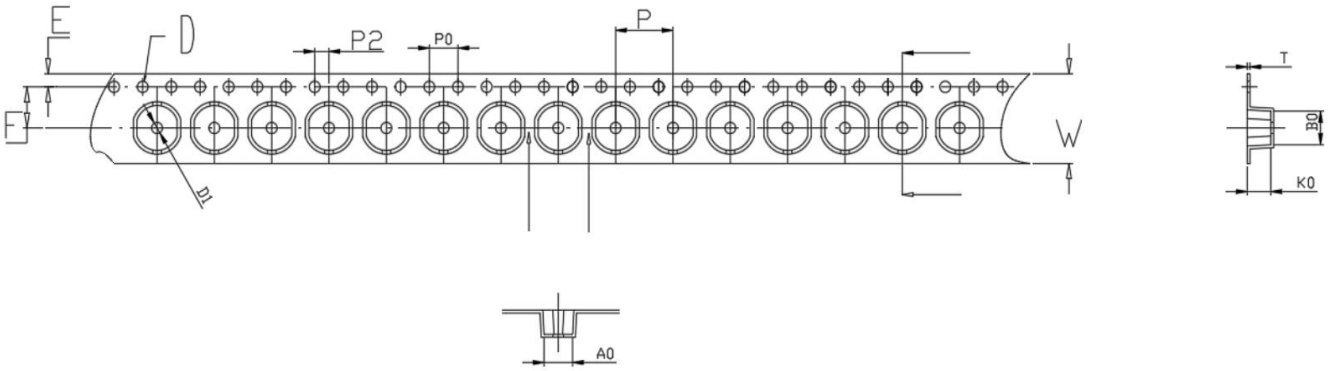

W	A0	B0	K0	P	F	E	D	P0	P2	T	Packaging quantity
16.0 ±0.3	7.2 ±0.1	8.1 ±0.1	5.5 ±0.1	12.0 ±0.1	7.5 ±0.1	1.75 ±0.1	1.5+0.1 /-0.0	4.0 ±0.1	2.0 ±0.1	0.4 ±0.05	1000PCS/REEL