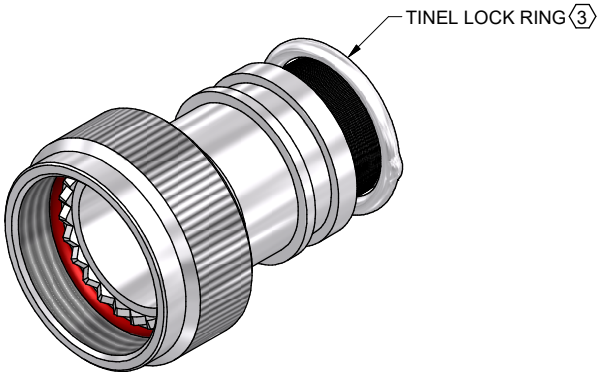

CODE 78 - TINEL-LOCK BACKSHELL

TXR78AB00-1608AI-

- SERIES
  - TXR: RING INCLUDED (SEE RING OPTION)
  - TX: RING NOT INCLUDED
- CONNECTOR INTERFACE
- MATERIAL
  - REFER TO CH00-0250-008
- FINISH
  - REFER TO CH00-0250-008
- ANGLE
- DASH NUMBER (TABLE 1)
- ENTRY SIZE (TABLE 2)
- RING OPTION
  - AI - TO SUIT SINGLE BRAID
  - BI - TO SUIT DOUBLE BRAID
  - FOR TX, LEAVE BLANK
- MODIFICATION CODE
  - SEE CH00-0250-008 FOR OPTIONS 2

NOTES:

1. THIS PRODUCT IS DESIGNED TO TERMINATE A BRAIDED CABLE SHIELD AND A HEAT SHRINKABLE LIPPED BOOT TO A CONNECTOR.

2. FOR ADDITIONAL DIMENSIONS, ORDERING INFORMATION AND MODIFICATIONS, SEE CH00-0250-008.

3. SEE DRAWING TR FOR DETAIL ON TINEL-LOCK RING, RINGS ARE DESIGNED TO BE HEATED ELECTRICALLY, ALL RINGS ARE MARKED WITH THERMOCHROMIC PAINT WHICH CHANGES COLOUR WHEN INSTALLATION TEMPERATURE IS REACHED.

4. BACKSHELL TO BE PERMANENTLY MARKED/BAGGED AND LABELLED WITH CODE IDENTIFICATION NUMBER AND PART NUMBER LESS RING DESIGNATOR. (e.g. 06090-TXR78AB00-1810). RING SHALL BEAR NO MARKING.

5. WHEN ENTRY SIZE EXCEEDS "MAX ENTRY", A 2 PIECE ADAPTER (TYPE II) IS SUPPLIED.

6. BACKSHELL MATES TO BS9522 F0032 (PATT121B) CONNECTORS; ONLY MANUFACTURED BY AB CONNECTORS LTD. SEALING IS ONLY ACHIEVED WHEN USING GROMMETS ABB-*-**-**-GAC-***, SUPPLIED BY AB CONNECTORS

DRAWN	K.WINCZURA	DATE 05/05/2015	3RD ANGLE PROJECTION NOT TO SCALE
CHECKED		05/05/2015	
APPROVED	K.SHEPPARD	23/06/2015	UNLESS OTHERWISE SPECIFIED ALL DIMENSIONS IN MILLIMETRES GENERAL TOL LINEAR +/-0,25MM ANGULAR +/- 1°
APPROVED	H.SMITH	21/10/2015	

REVISIONS

LTR	DESCRIPTION	DATE	APPROVED
D	REVISED PER ECO-15-013162	14/09/2015	H.SMITH
E	REVISED PER ECO-15-015098	21/10/2015	H.SMITH

TE CAGE CODE: 06090
POLAMCO/TE CAGE CODE: U5792

TITLE:

TINEL-LOCK BACKSHELL

ASSY USED ON:

BS9522 F0032 (PATT121B) CONNECTORS

Polamco

TE connectivity

TE CONNECTIVITY - POLAMCO LTD RESERVES THE RIGHT TO AMEND THIS DRAWING AND THE INFORMATION SET FORTH HEREON AT ANY TIME. USERS SHOULD INDEPENDENTLY EVALUATE THE SUITABILITY OF THE PRODUCT FOR THEIR APPLICATION.

DRAWING NO:	DRAWING REV:	SHT
TXR78	E	1

Downloaded from Arrow.com.

IF MAX ENTRY IS EXCEEDED BACKSHELL
WILL BE SUPPLIED AS TYPE 2

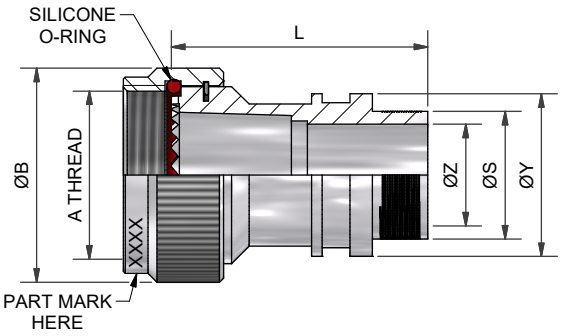

STRAIGHT BACKSHELL - TYPE 1

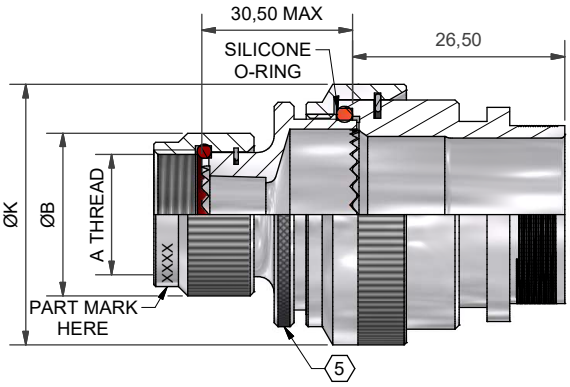

STRAIGHT BACKSHELL - TYPE 2

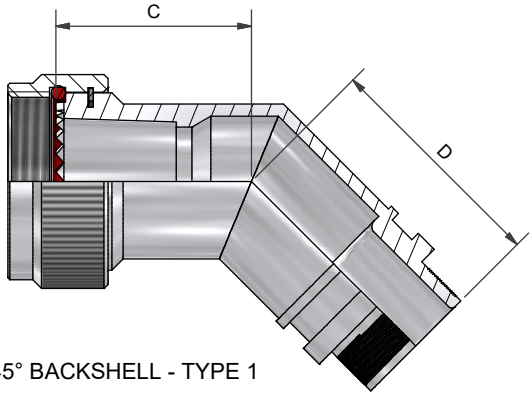

45° BACKSHELL - TYPE 1

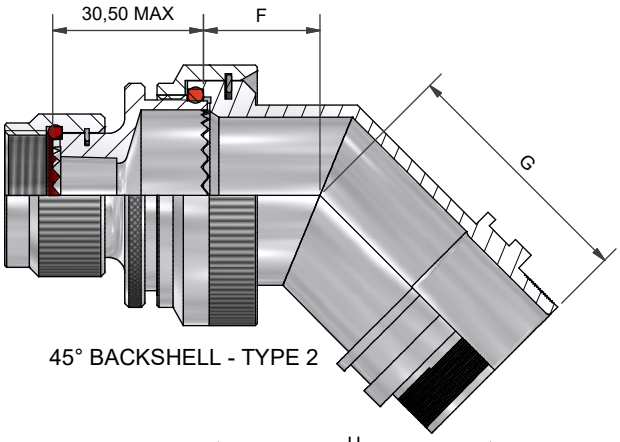

45° BACKSHELL - TYPE 2

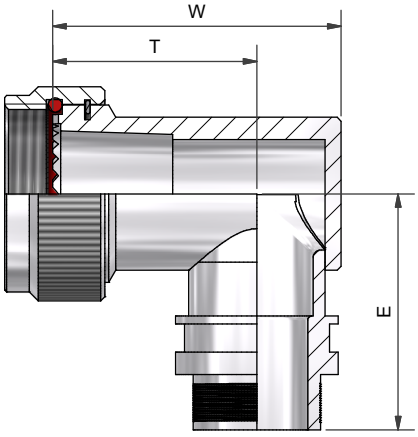

90° BACKSHELL - TYPE 1

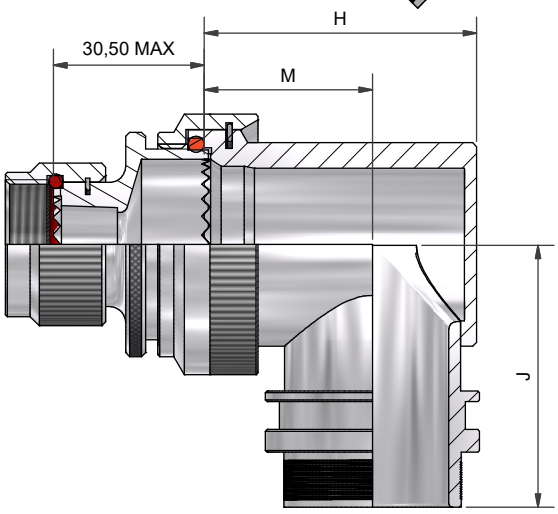

90° BACKSHELL - TYPE 2

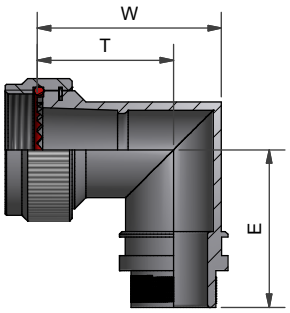

90° BACKSHELL - TYPE 1
STAINLESS STEEL AND
NICKEL ALUMINIUM BRONZE

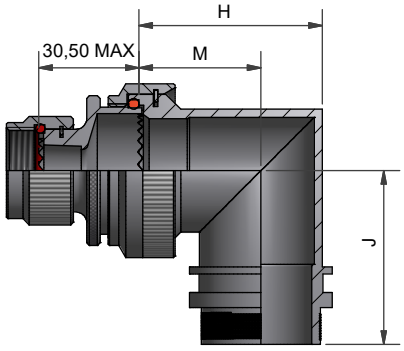

90° BACKSHELL - TYPE 2
STAINLESS STEEL AND
NICKEL ALUMINIUM BRONZE

DRAWN	K.WINCZURA	DATE 05/05/2015	3RD ANGLE PROJECTION NOT TO SCALE
CHECKED		05/05/2015	
APPROVED	K.SHEPPARD	23/06/2015	UNLESS OTHERWISE SPECIFIED ALL DIMENSIONS IN MILLIMETRES GENERAL TOL LINEAR +/-0,25MM ANGULAR +/- 1°
APPROVED	H.SMITH	21/10/2015	

REVISIONS

LTR	DESCRIPTION	DATE	APPROVED
D	REVISED PER ECO-15-013162	14/09/2015	H.SMITH
E	REVISED PER ECO-15-015098	21/10/2015	H.SMITH

TE CAGE CODE: 06090
POLAMCO/TE CAGE CODE: U5792

TITLE:

TINEL-LOCK BACKSHELL

ASSY USED ON:

BS9522 F0032 (PATT121B) CONNECTORS

Polamco

TE connectivity

TE CONNECTIVITY - POLAMCO LTD RESERVES THE RIGHT TO AMEND THIS DRAWING AND THE INFORMATION SET FORTH HEREON AT ANY TIME. USERS SHOULD INDEPENDENTLY EVALUATE THE SUITABILITY OF THE PRODUCT FOR THEIR APPLICATION.

DRAWING NO:	DRAWING REV:	SHT
TXR78	E	2

Downloaded from Arrow.com.

TABLE 1

ORDER NUMBER	SHELL SIZE	A THREAD	ØB MAX	MAX ENTRY	C ±0,5	D ±0,5	W ±0,5	T ±0,5	E ±0,5	THESE DIMENSIONS APPLY IF BACKSHELL IS STAINLESS STEEL OR NICKEL ALUMINIUM BRONZE: W MAX	T ±0,5	E ±0,5	L MAX
12	10SL & 12S	5/8-24UNEF	20,3	05	15,2	27,5	25,0	17,3	27,4	25,5	17,3	27,4	32,00
14	14S	3/4-20UNEF	23,7	07	16,2	28,0	29,0	20,0	28,0	29,5	20,1	28,0	32,00
16	16/16S	7/8-20UNEF	26,7	08	23,9	29,0	36,0	25,5	29,5	36,5	25,5	29,5	36,83
18	18	1-20UNEF	30,3	10	24,6	29,7	39,0	27,0	31,0	39,5	27,0	31,0	36,83
20	20	1 1/8-18UNEF	35,3	12	25,1	30,5	42,0	28,0	32,7	42,5	28,0	32,7	38,87
22	22	1 1/4-18UNEF	38,3	14	25,9	30,9	45,0	29,5	34,3	45,5	29,5	34,3	38,87
24	24	1 3/8-18UNEF	41,3	16	27,1	31,1	48,0	31,0	35,8	48,5	31,0	35,8	41,15
28	28	1 5/8-18UNEF	47,8	18	28,8	32,1	55,1	35,5	38,9	55,6	35,5	38,9	41,15
32	32	1 7/8-16UN	54,2	22	29,7	29,3	59,0	36,2	42,4	59,5	36,2	42,4	44,71
36	36	2 1/16-16UNS	62,2	24	31,2	30,7	64,0	39,0	45,2	64,5	39,0	45,2	44,71

TABLE 2

ENTRY SIZE	ØZ MIN	ØS	ØY ± 0,3	ØK MAX	F ±0,5	G ±0,5	H ±0,5	M ±0,5	J ±0,5	THESE DIMENSIONS APPLY IF BACKSHELL IS STAINLESS STEEL OR NICKEL ALUMINIUM BRONZE: H ±0,5	M ±0,5	J ±0,5
04	6,35	9,49 +/-0,04	14,00	NA	NA	NA	NA	NA	NA	NA	NA	NA
05	7,92	11,06 +/-0,04	15,50	NA	NA	NA	NA	NA	NA	NA	NA	NA
06	9,53	12,66 +/-0,04	17,10	21,0	12,5	27,5	24,0	15,5	28,0	24,3	17,2	28,2
07	11,10	14,21 +/-0,07	18,70	21,0	12,5	27,5	24,0	15,5	28,0	24,3	17,2	28,2
08	12,70	15,81 +/-0,07	20,30	24,5	13,1	28,0	27,0	17,0	29,5	28,3	19,4	29,7
10	15,88	18,96 +/-0,08	23,50	29,0	13,5	29,0	31,0	19,5	31,0	31,1	21,0	31,2
12	19,05	22,14 +/-0,08	26,70	32,5	14,5	29,7	34,0	21,0	32,7	34,2	22,8	32,9
14	22,23	25,30 +/-0,08	29,80	35,5	15,5	30,5	35,0	20,0	34,3	38,5	25,3	34,5
16	25,40	28,48 +/-0,08	33,00	37,0	16,1	30,9	38,0	21,5	35,8	40,7	26,1	36,1
18	28,58	31,65 +/-0,08	36,20	40,0	16,5	31,1	42,0	24,0	37,4	43,7	27,6	37,6
20	31,75	34,83 +/-0,08	39,40	43,5	17,0	32,1	45,0	25,5	38,9	46,4	29,1	39,1
22	34,93	37,98 +/-0,08	42,50	48,5	18,5	35,3	54,5	31,0	42,0	50,0	31,0	42,0
24	38,10	41,15 +/-0,08	45,70	52,1	21,9	38,1	58,0	33,0	46,0	53,5	33,0	46,0

DRAWN	K.WINCZURA	DATE 05/05/2015	3RD ANGLE PROJECTION NOT TO SCALE
CHECKED		05/05/2015	
APPROVED	K.SHEPPARD	23/06/2015	UNLESS OTHERWISE SPECIFIED ALL DIMENSIONS IN MILLIMETRES GENERAL TOL LINEAR +/-0,25MM ANGULAR +/- 1°
APPROVED	H.SMITH	21/10/2015	

REVISIONS

LTR	DESCRIPTION	DATE	APPROVED
D	REVISED PER ECO-15-013162	14/09/2015	H.SMITH
E	REVISED PER ECO-15-015098	21/10/2015	H.SMITH

TE CAGE CODE: 06090
POLAMCO/TE CAGE CODE: U5792

TITLE:

TINEL-LOCK BACKSHELL

ASSY USED ON:

BS9522 F0032 (PATT121B) CONNECTORS

Polamco

TE connectivity

TE CONNECTIVITY - POLAMCO LTD RESERVES THE RIGHT TO AMEND THIS DRAWING AND THE INFORMATION SET FORTH HEREON AT ANY TIME. USERS SHOULD INDEPENDENTLY EVALUATE THE SUITABILITY OF THE PRODUCT FOR THEIR APPLICATION.

DRAWING NO:	DRAWING REV:	SHT
TXR78	E	3

Downloaded from Arrow.com.