No.of Contact	Cable OD(mm)	Item No.
4P	8.5	MI2S-04BFFM-SR8SXX
3P	7.8	MI2S-03BFFM-SR8SXX

REV.	ECN NO.	DATE	SIGN	DESCRIPTION
B	C211568	2021/10/15	Li Dai	△B X3
C	C221810	2022/12/07	Li Dai	△C X4
D	C230009	2023/01/03	Vicky	△D X3

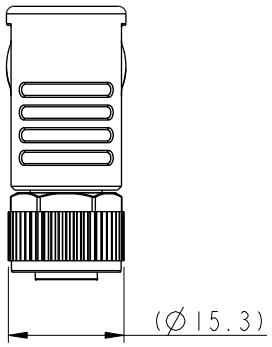

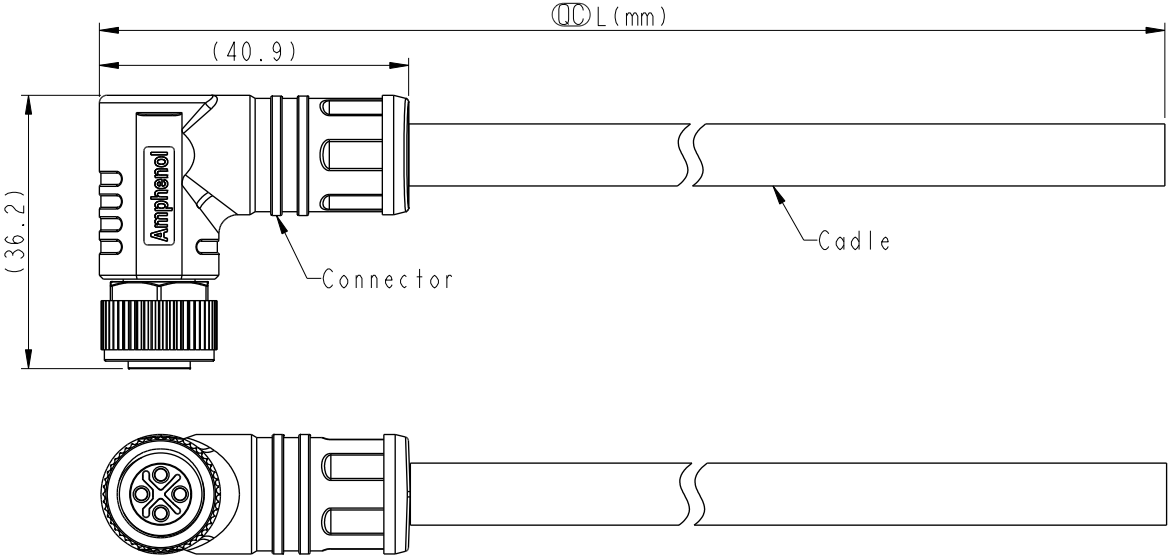

Pin #	Wire		Pin #	Wire	
PE	Yellow/Green	黃/綠	PE	Yellow/Green	黃/綠
3	Blue	藍	3	Blue	藍
			2	White	白
1	Brown	棕	1	Brown	棕

Pin Out

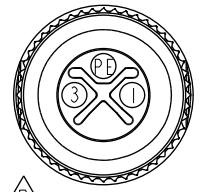

△B 2+PE

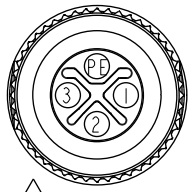

△B 3+PE

Pin Assignments Front View

MI2S-XXBFFM-SR8SXX△C

XX: 01~99 Meters
01: 01 Meter
02: 02 Meters
.
.
99: 99 Meters

No. of Pin

Note:
* RoHS Compliant
* QC Important dimension
△D* Waterproof rate: IP68, mated 1m/24h
IP69K, mated
* Connector
Housing: Thermoplastic, Black
Pin: Copper alloy, Gold plated
O-Ring: Rubber, Green
Nut: Metal
Outer mold: Thermoplastic, Black
△C* Cable: UL20234, 16AWG, TPU, Black
* Cable length tolerance: 1M: +50/-0 mm
1M < L ≤ 3M: +100/-0 mm
3M < L ≤ 5M: +150/-0 mm
5M < L ≤ 10M: ±100 mm
10M < L ≤ 20M: ±200 mm
20M < L ≤ 30M: ±300 mm
30M < L ≤ 99M: ±500 mm

UNIT:mm

TOLERANCE
±0.5mm

TITLE: N SEN, MI2 S, SCREW CABLE W/O SR, F, F, MOLDING △D

SCALE 1:1 | SIZE A4 | SHEET 1 OF 1 | REV. D | WC-REV. .0

QC: Inspection item

Amphenol LTW
安費諾亮泰企業股份有限公司

ITEM NO	DRAWN BY	DATE
	Li Dai	2021-09-28
DWG NO △C MI2S-XXBFFM-SR8SXX	CHECKED BY Fisher Wang	DATE 2021-09-28
CUSTOMER ALTW	APPROVED BY Max Yang	DATE 2021-09-28

THIS DOCUMENT IS SUBJECT TO CHANGE WITHOUT NOTICE. IT IS CONFIDENTIAL AND A PROPERTY OF Amphenol LTW. DISCLOSURE TO THIRD PARTY HAS TO BE AUTHORIZED BY Amphenol LTW.

Unikeyic Electronics

Global Electronic Components Distributor

Click to view pricing, inventory, delivery, and lifecycle information:

AMPHENOL LTW:

DC-05BMFB-QL8APP RCP5SM-SPG06M-TL7B01 FLKD-07EGFS-GCP-001 M12A-04PFFS-SF8002 ASU-08PMMS-QC8A15 CC-03BFMB-QL8APP DD-18BMFA-LL7001 M12A-17BMMM-PL8D04 MSAP-12BMMA-SL7001 BD-03BFFA-QL8MP0 BSU-10PMMS-SC7001 RCP5UM-UPG06M-TL7A01 ACC-03AFFM-LL7A01 AD-03BMMA-LL7001 DC-05BMMA-QL8MPP M12A04FR-12AFR-SD001 8-04PMMS-SH7002 PWC-03BFFA-LL7002 Q8DU-05PMMS-QF8001 DT-HCM-G3BMM-RLA60 LAD-05BFFM-QR8D01 PWCU-04RMFS-LC7002 PWM-02BFMB-TL7001 DT-HCM-G3BFF-RLA60 FLBB-04FGMS-GCP-207 M12A-03PMMS-SF8001 M12A04FL-12AFR-SDA05 MSBP05MR-SBPMR-SB001 MSBS-05PFFR-SF7003 8-03PMMS-SH7002