SI7139DP-T1-GE3

P-Channel Enhancement Mode MOSFET

Description

The SI7139DP-T1-GE3 uses advanced trench technology to provide excellent $R_{DS(ON)}$, low gate charge and operation with gate voltages as low as 4.5V. This device is suitable for use as a Battery protection or in other Switching application.

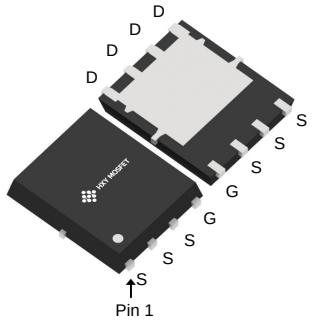

DFN5X6-8L
(PowerPAK-SO-8)

General Features

V_{DS} = -30VI $_D$ =-70A

$R_{DS(ON)}$ < 8.8mΩ V_{GS}=-10V

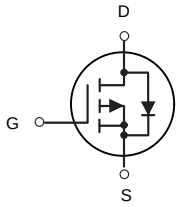

P-Channel MOSFET

Application

Battery protection

Load switch

Uninterruptible power supply

Package Marking and Ordering Information

Product ID	Pack	Brand	Qty(PCS)
SI7139DP-T1-GE3	DFN5X6-8L (PowerPAK-SO-8)	HXY MOSFET	5000

Absolute Maximum Ratings (T_C=25℃unless otherwise noted)

Symbol	Parameter	Rating	Units
V_{DS}	Drain-Source Voltage	-30	V
V_{GS}	Gate-Source Voltage	±20	V
I_D@T_C=25℃	Continuous Drain Current, V_{GS} @ 10V[1]	-70	A
I_D@T_C=75℃	Continuous Drain Current, V_{GS} @ 10V[1]	-40	A
I_{DM}	Pulsed Drain Current[2]	-175	A
EAS	Single Pulse Avalanche Energy[3]	31	mJ
P_D@T_C=25℃	Total Power Dissipation[4]	31.2	W
T_{STG}	Storage Temperature Range	-55 to 150	℃
T_J	Operating Junction Temperature Range	-55 to 150	℃
$R_{\theta JC}$	Thermal Resistance Junction-Case[1]	4	℃/W
$R_{\theta JA}$	Thermal Resistance Junction-Ambient[1]	61	℃/W

ElectricalCharacteristics(T_J=25℃ unless otherwise noted)

Parameter		Symbol	Test Conditions	Min.	Typ.	Max.	Unit
Drain-Source Breakdown Voltage		$V_{(BR)DSS}$	V_{GS} = 0V, I_D = -250μA	-30	-	-	V
Gate-body Leakage current		I_{GSS}	V_{DS} = 0V, V_{GS} = ±20V	-	-	±100	nA
Zero Gate Voltage Drain Current	T_J=25℃	I_{DSS}	V_{DS} = -24V, V_{GS} = 0V	-	-	-1	μA
	T_J=55℃			-	-	-5	
Gate-Threshold Voltage		$V_{GS(th)}$	V_{DS} = V_{GS}, I_D = -250μA	-1.0	-1.6	-2.5	V
Drain-Source On-Resistance[2]		$R_{DS(on)}$	V_{GS} = -10V, I_D = -12A	-	6	8.8	mΩ
			V_{GS} = -4.5V, I_D = -8A	-	9	14	
Forward Transconductance		g_{fs}	V_{DS} = -5V, I_D = -20A	-	28	-	S
Input Capacitance		C_{iss}	V_{DS} = -15V, V_{GS} =0V, f =1MHz	-	4320	-	pF
Output Capacitance		C_{oss}		-	529	-	
Reverse Transfer Capacitance		C_{rss}		-	487	-	
Gate Resistance		R_g	V_{DS} = 0V, V_{GS}= 0V, f=1.0MHz	-	4.0	-	Ω
Total Gate Charge		Q_g	V_{GS} = -10V, V_{DS} = -15V, I_D= -15A	-	45	-	nC
Gate-Source Charge		Q_{gs}		-	8.5	-	
Gate-Drain Charge		Q_{gd}		-	12.8	-	
Turn-On Delay Time		$t_{d(on)}$	V_{GS} = -10V, V_{DD} = -15V, R_G = 2.5Ω, I_D= -15A	-	18.9	-	nS
Rise Time		t_r		-	15.7	-	
Turn-Off Delay Time		$t_{d(off)}$		-	64.8	-	
Fall Time		t_f		-	36.5	-	
Diode Forward Voltage[2]		V_{SD}	I_S = -1A, V_{GS} = 0V	-	-	-1	V
Continuous Source Current[1,5]		I_S	V_G=V_D=0V , Force Current	-	-	-70	A

Note :

1.The data tested by surface mounted on a 1 inch^2 FR-4 board with 2OZ copper.

2.The data tested by pulsed , pulse width ≤ 300us , duty cycle ≤ 2%

3.The EAS data shows Max. rating . The test condition is V_{DD}= -25V, V_{GS}= -10V, L= 0.1mH, I_{AS}= -25A

4.The power dissipation is limited by 150℃ junction temperature

5.The data is theoretically the same as I_D and I_{DM} , in real applications , should be limited by total power dissipation.

Typical Electrical And Thermal Characteristics (Curves)

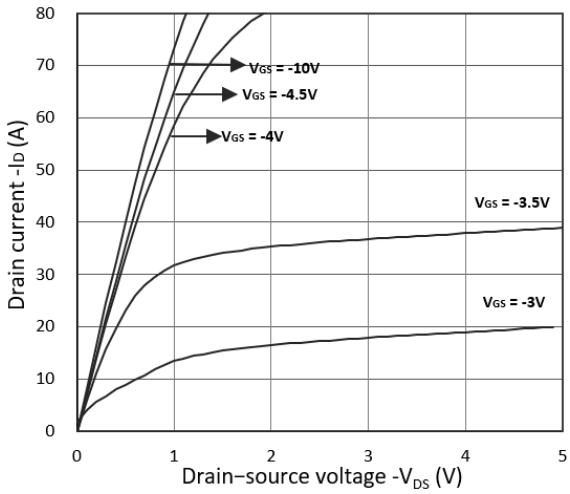

Figure 1. Output Characteristics

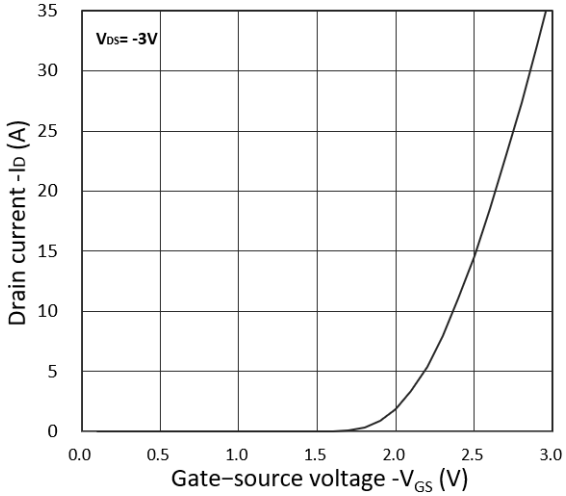

Figure 2. Transfer Characteristics

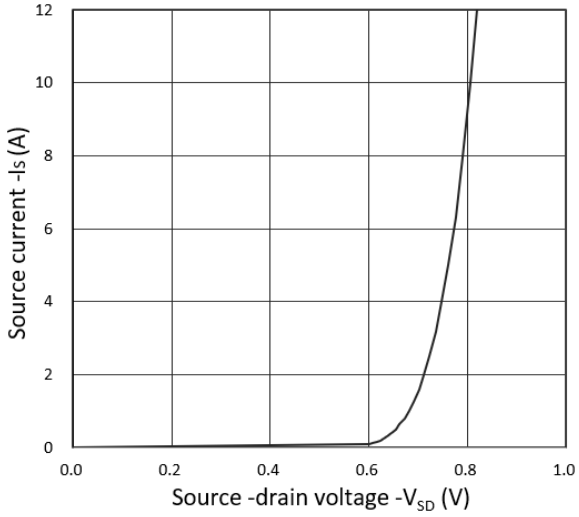

Figure 3. Forward Characteristics of Reverse

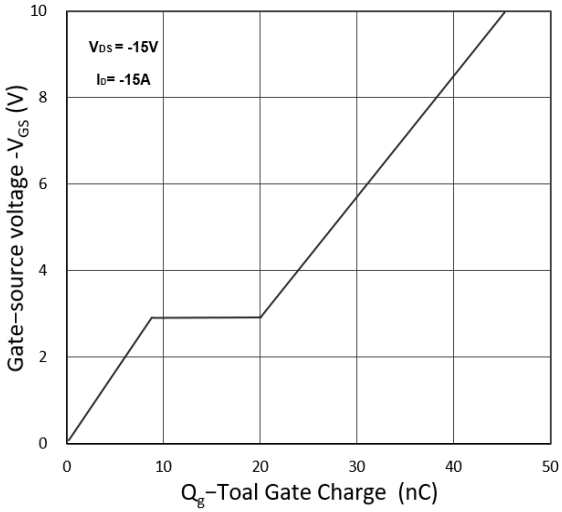

Figure 4. Gate Charge Characteristics

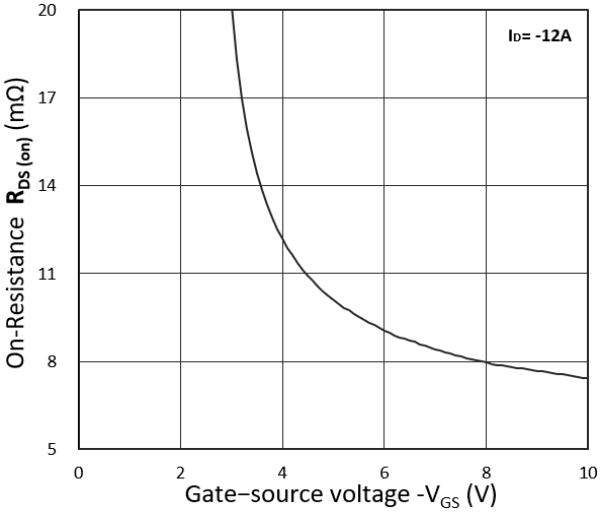

Figure 5. $R_{DS(on)}$ vs. V_{GS}

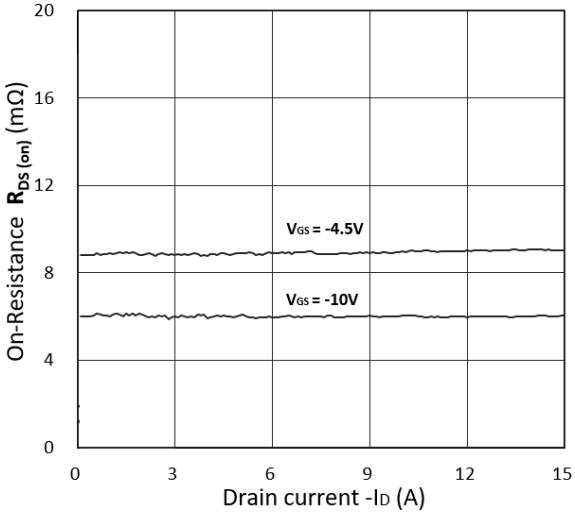

Figure 6. $R_{DS(on)}$ vs. I_D

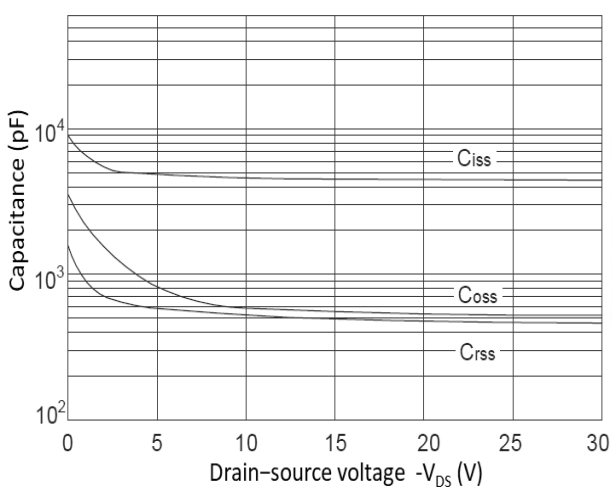

Figure 7. Capacitance Characteristics

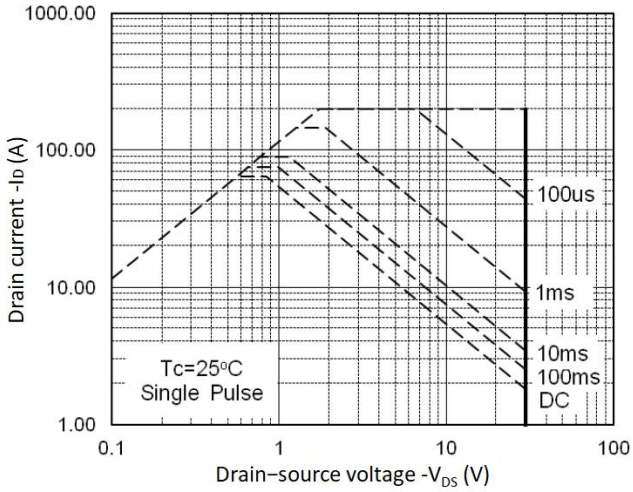

Figure 8. Safe Operating Area

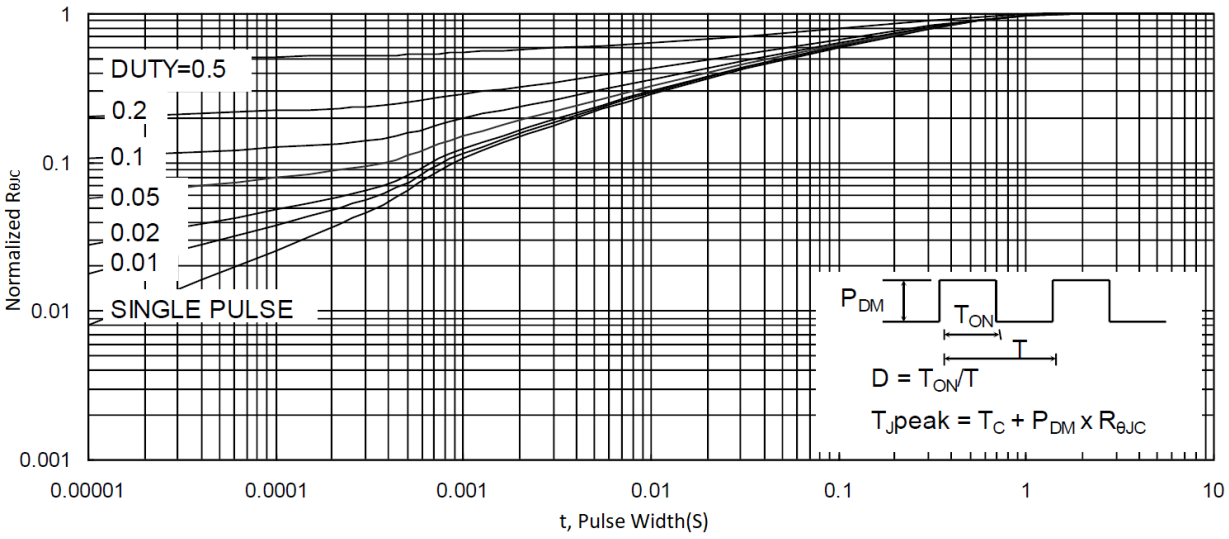

Figure 9. Normalized Maximum Transient Thermal Impedance

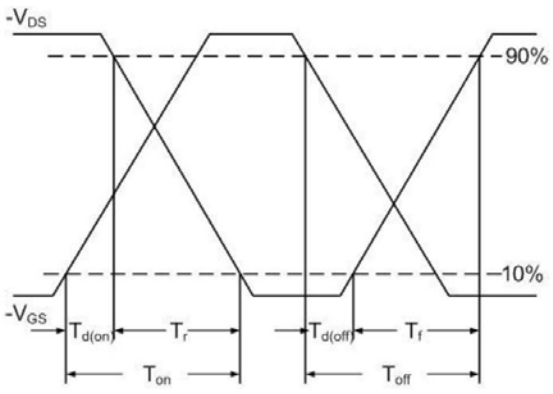

Figure 10. Switching Time Waveform

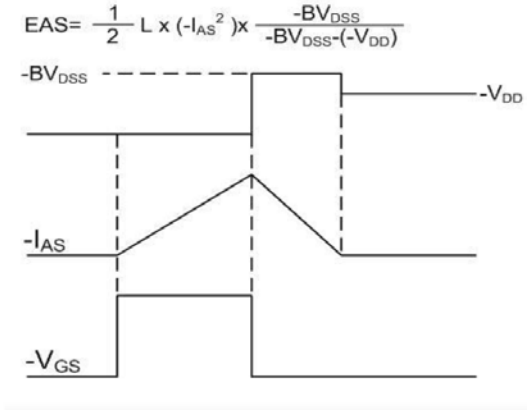

Figure 11. Unclamped Inductive Switching Waveform

Test Circuit

Gate Charge Test Circuit & Waveform

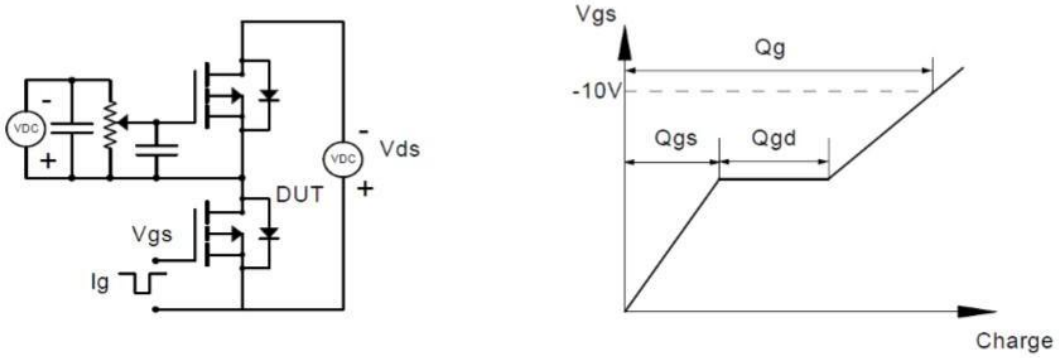

Resistive Switching Test Circuit & Waveforms

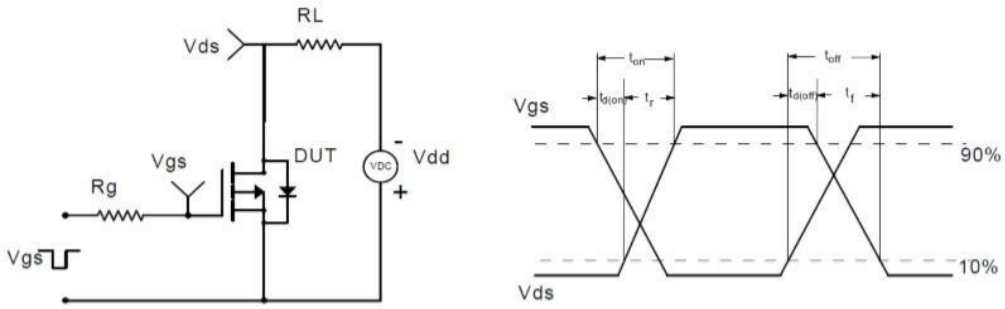

Unclamped Inductive Switching (UIS) Test Circuit & Waveforms

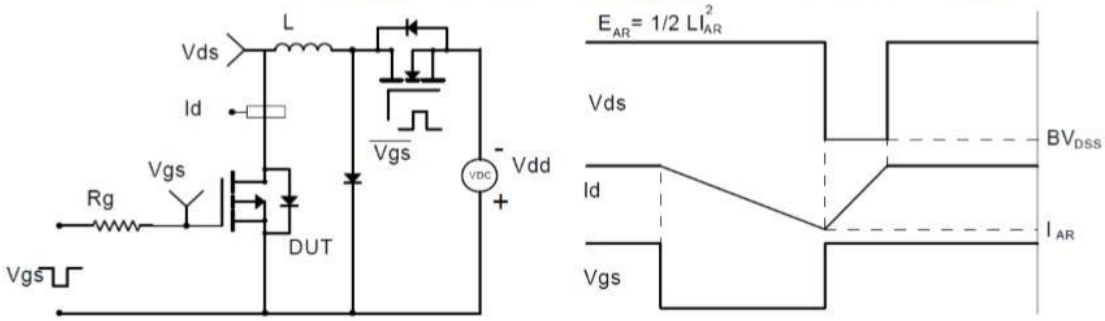

Diode Recovery Test Circuit & Waveforms

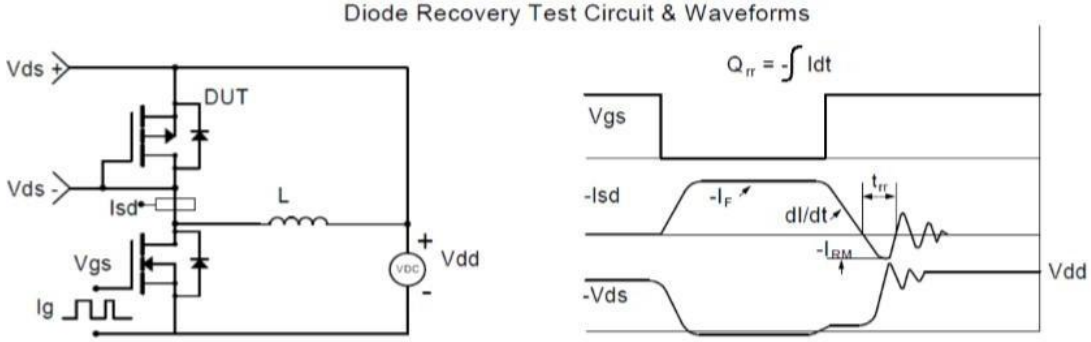

DFN3X3-8L(PowerPAK-SO-8) Package Information

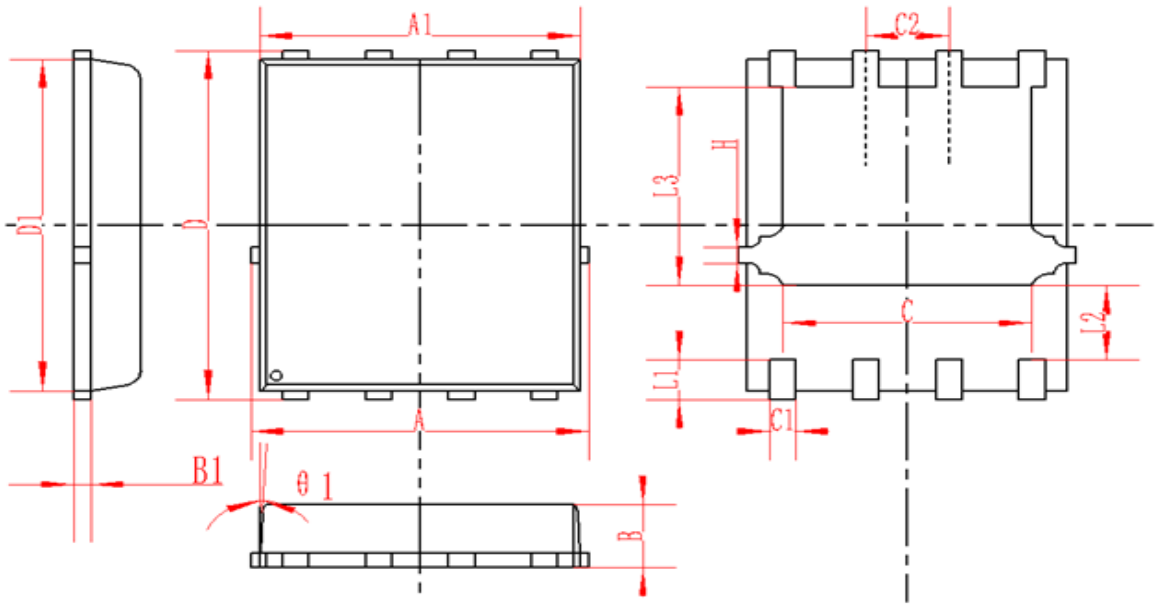

SYMBOL	MM			INCH		
	MIN	NOM	MAX	MIN	NOM	MAX
A	4.95	5	5.05	0.195	0.197	0.199
A1	4.82	4.9	4.98	0.190	0.193	0.196
D	5.98	6	6.02	0.235	0.236	0.237
D1	5.67	5.75	5.83	0.223	0.226	0.230
B	0.9	0.95	1	0.035	0.037	0.039
B1	0.254REF			0.010REF		
C	3.95	4	4.05	0.156	0.157	0.159
C1	0.35	0.4	0.45	0.014	0.016	0.018
C2	1.27TYP			0.5TYP		
θ1	8°	10°	12°	8°	10°	12°
L1	0.63	0.64	0.65	0.025	0.025	0.026
L2	1.2	1.3	1.4	0.047	0.051	0.055
L3	3.415	3.42	3.425	0.134	0.135	0.135
H	0.24	0.25	0.26	0.009	0.010	0.010

Attention

■ Any and all HUA XUAN YANG ELECTRONICS products described or contained herein do not have specifications that can handle applications that require extremely high levels of reliability, such as life-support systems, aircraft's control systems, or other applications whose failure can be reasonably expected to result in serious physical and/or material damage. Consult with your HUA XUAN YANG ELECTRONICS representative nearest you before using any HUA XUAN YANG ELECTRONICS products described or contained herein in such applications.

■ HUA XUAN YANG ELECTRONICS assumes no responsibility for equipment failures that result from using products at values that exceed, even momentarily, rated values (such as maximum ratings, operating condition ranges, or other parameters) listed in products specifications of any and all HUA XUAN YANG ELECTRONICS products described or contained herein.

■ Specifications of any and all HUA XUAN YANG ELECTRONICS products described or contained herein stipulate the performance, characteristics, and functions of the described products in the independent state, and are not guarantees of the performance, characteristics, and functions of the described products as mounted in the customer's products or equipment. To verify symptoms and states that cannot be evaluated in an independent device, the customer should always evaluate and test devices mounted in the customer's products or equipment.

■ HUA XUAN YANG ELECTRONICS CO.,LTD. strives to supply high-quality high-reliability products. However, any and all semiconductor products fail with some probability. It is possible that these probabilistic failures could
give rise to accidents or events that could endanger human lives, that could give rise to smoke or fire, or that could cause damage to other property. When designing equipment, adopt safety measures so that these kinds of accidents or events cannot occur. Such measures include but are not limited to protective circuits and error prevention circuits for safe design, redundant design, and structural design.

■ In the event that any or all HUA XUAN YANG ELECTRONICS products(including technical data, services) described or contained herein are controlled under any of applicable local export control laws and regulations, such products must not be exported without obtaining the export license from the authorities concerned in accordance with the above law.

■ No part of this publication may be reproduced or transmitted in any form or by any means, electronic or mechanical, including photocopying and recording, or any information storage or retrieval system, or otherwise, without the prior written permission of HUA XUAN YANG ELECTRONICS CO.,LTD.

■ Information (including circuit diagrams and circuit parameters) herein is for example only ; it is not guaranteed for volume production. HUA XUAN YANG ELECTRONICS believes information herein is accurate and reliable, but no guarantees are made or implied regarding its use or any infringements of intellectual property rights or other rights of third parties.

■ Any and all information described or contained herein are subject to change without notice due to product/technology improvement, etc. When designing equipment, refer to the "Delivery Specification" for the HUA XUAN YANG ELECTRONICS product that you intend to use.

Unikeyic Electronics

Global Electronic Components Distributor

Click to view pricing, inventory, delivery, and lifecycle information:

HXY MOSFET:

BZT52C3V3S DTC143ZE HAD8542ARZ P6SMB200A US2M SS5150B SD15C TPSMB100CA-VR HMCP602-I/SN SS1045 P6SMB33CA BZT52C13 HXY8205ES IRLML6246PBF MAX487ESA HOPA2340UA HXY2300MI SQJA04EP-T1_BE3 SS510C TPSMB28A-VR HC4D20120A HT7540-1 MMBT3904T P6SMB36CA PESD5V0S1BB HC3D10170A HESDNC5VB1AF-B HT7150 HXY2101EI SS10100