N-Channel Enhancement Mode Power MOSFET

Features

- V_{DS}= 100V, I_D= 4 A
  $R_{DS(ON)}$ < 144 mΩ @ V_{GS} = 10V
  $R_{DS(ON)}$ < 150 mΩ @ V_{GS} =4.5V

General Features

- Advanced Trench Technology
- Provide Excellent RDS(ON) and Low Gate Charge
- Lead Free and Green Available

100% UIS TESTED!
100% ΔVds TESTED!

RoHS

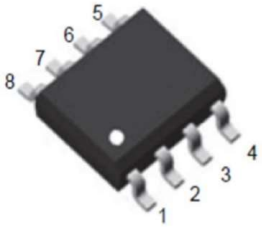

SOP-8



pin assignment

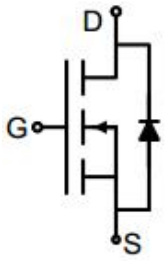

Schematic diagram

Absolute Maximum Ratings (T_A=25℃unless otherwise noted)

Parameter	Symbol	Limit	Unit
Drain-Source Voltage	V_{DS}	100	V
Gate-Source Voltage	V_{GS}	±20	V
Drain Current-Continuous	I_D	4	A
Drain Current-Pulsed (Note 1)	I_{DM}	20	A
Maximum Power Dissipation	P_D	2.5	W
Operating Junction and Storage Temperature Range	T_J,T_{STG}	-55 To 150	℃

Thermal Characteristic

Thermal Resistance,Junction-to-Ambient (Note 2)	$R_{\theta JA}$	50	℃/W

Electrical Characteristics (T_A=25℃unless otherwise noted)

Parameter	Symbol	Condition	Min	Typ	Max	Unit
Off Characteristics						
Drain-Source Breakdown Voltage	BV_{DSS}	V_{GS}=0V I_D=250μA	100	-	-	V
Zero Gate Voltage Drain Current	I_{DSS}	V_{DS}=100V,V_{GS}=0V	-	-	1	μA
Gate-Body Leakage Current	I_{GSS}	V_{GS}=±20V,V_{DS}=0V	-	-	±100	nA
On Characteristics (Note 3)						
Gate Threshold Voltage	$V_{GS(th)}$	V_{DS}=V_{GS},I_D=250μA			3.0	V
Drain-Source On-State Resistance	$R_{DS(ON)}$	V_{GS}=10V, I_D=4A	-		144	mΩ
		V_{GS}=4.5V, I_D=4A	-		150	
Forward Transconductance	g_{FS}	V_{DS}=5V,I_D=4A	-	5	-	S
Dynamic Characteristics (Note4)						
Input Capacitance	C_{lss}	V_{DS}=50V,V_{GS}=0V, F=1.0MHz	-	650	-	PF
Output Capacitance	C_{oss}		-	24	-	PF
Reverse Transfer Capacitance	C_{rss}		-	20	-	PF
Switching Characteristics (Note 4)						
Turn-on Delay Time	$t_{d(on)}$	V_{DD}=50V, R_L=12.5Ω V_{GS}=10V,R_G=3Ω	-	6	-	nS
Turn-on Rise Time	t_r		-	4	-	nS
Turn-Off Delay Time	$t_{d(off)}$		-	20	-	nS
Turn-Off Fall Time	t_f		-	4	-	nS
Total Gate Charge	Q_g	V_{DS}=50V,I_D=4A, V_{GS}=10V	-	20		nC
Gate-Source Charge	Q_{gs}		-	2.1	-	nC
Gate-Drain Charge	Q_{gd}		-	3.3	-	nC
Drain-Source Diode Characteristics						
Diode Forward Voltage (Note 3)	V_{SD}	V_{GS}=0V,I_S=4A	-	-	1.2	V
Diode Forward Current (Note 2)	I_S		-	-	4	A

Notes:

1. Repetitive Rating: Pulse width limited by maximum junction temperature.
2. Surface Mounted on FR4 Board, t ≤ 10 sec.
3. Pulse Test: Pulse Width ≤ 300μs, Duty Cycle ≤ 2%.
4. Guaranteed by design, not subject to production.

Test Circuit

1）E_{AS} test circuit

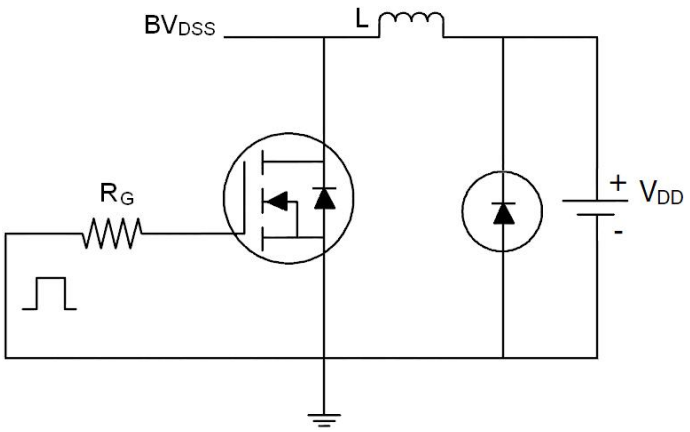

2）Gate charge test circuit

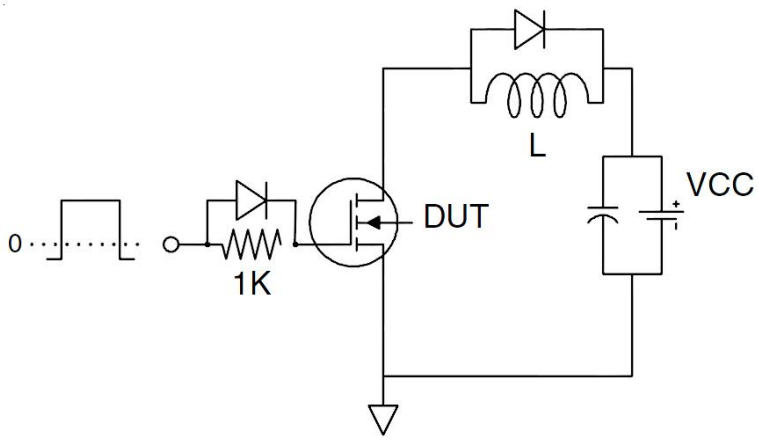

3）Switch Time Test Circuit

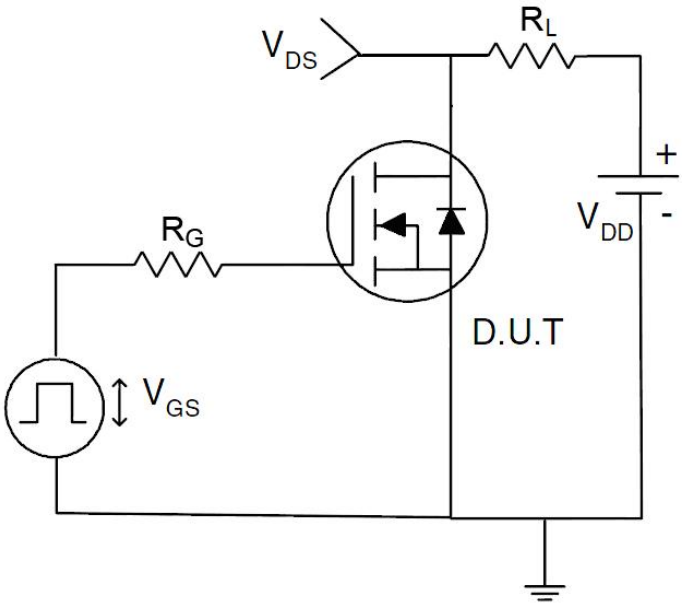

Typical Electrical and Thermal Characteristics (Curves)

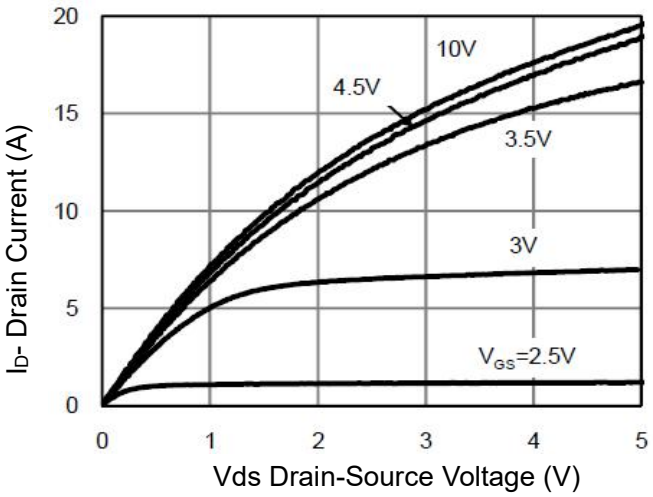

Figure 1 Output Characteristics

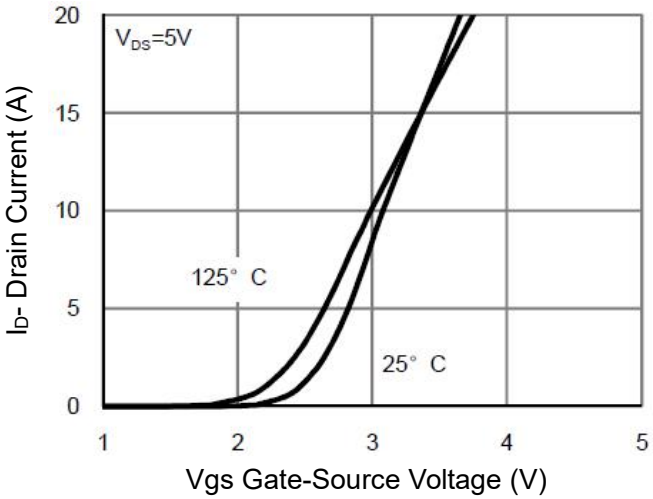

Figure 2 Transfer Characteristics

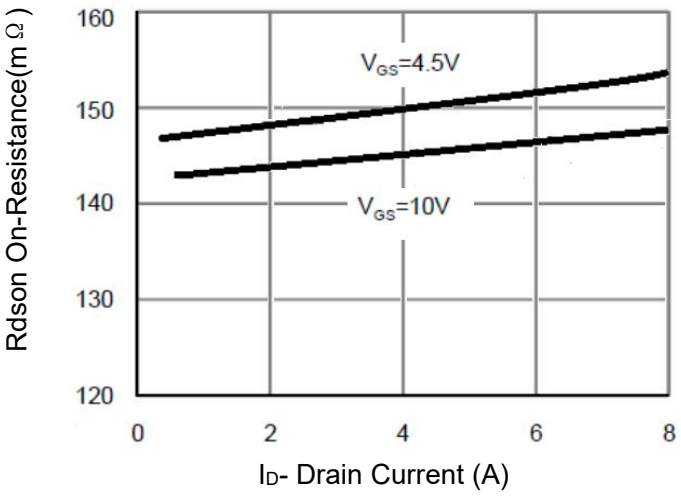

Figure 3 Rdson- Drain Current

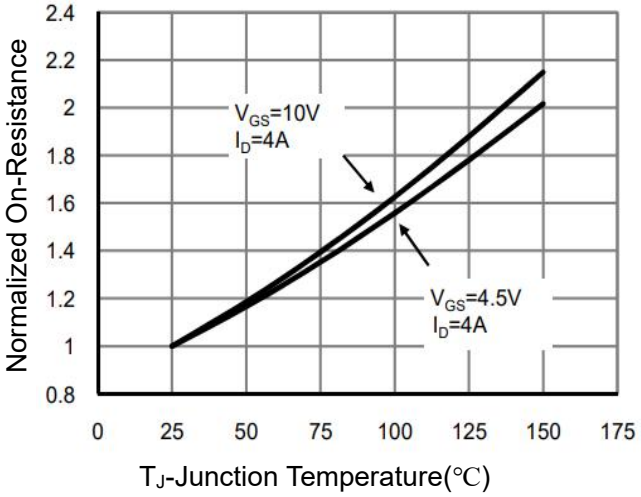

Figure 4 Rdson-JunctionTemperature

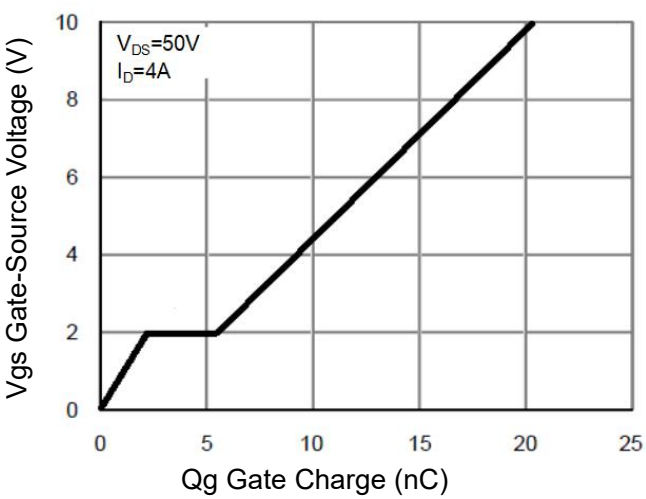

Figure 5 Gate Charge

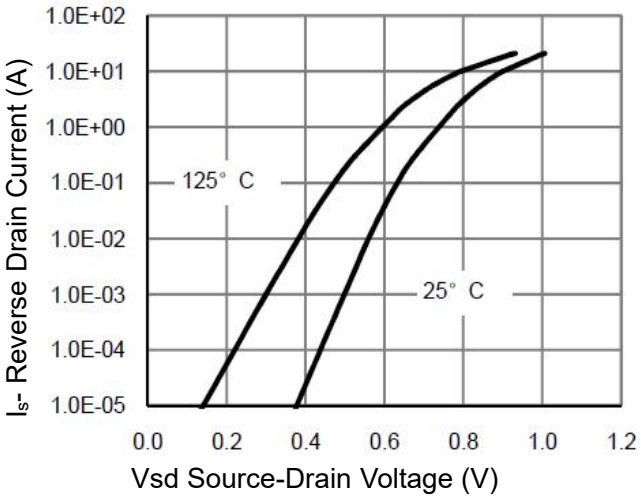

Figure 6 Source- Drain Diode Forward

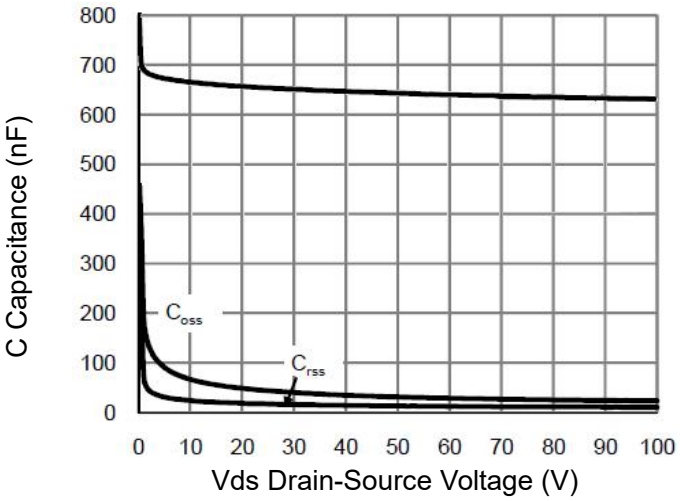

Figure 7 Capacitance vs Vds

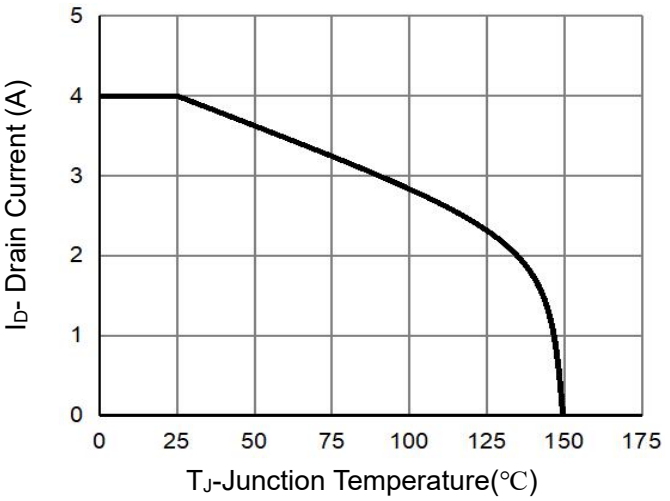

Figure 9 BV_{DSS} vs Junction Temperature

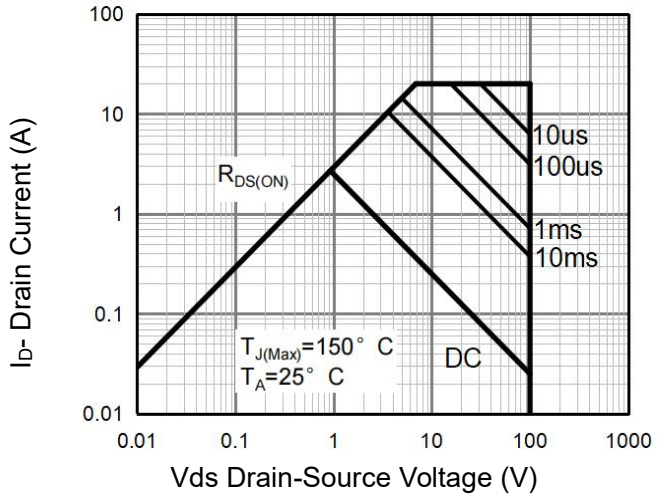

Figure 8 Safe Operation Area

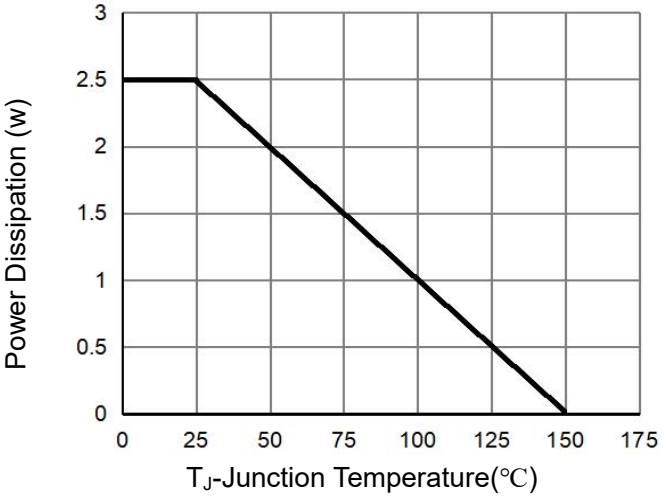

Figure 10 Power De-rating

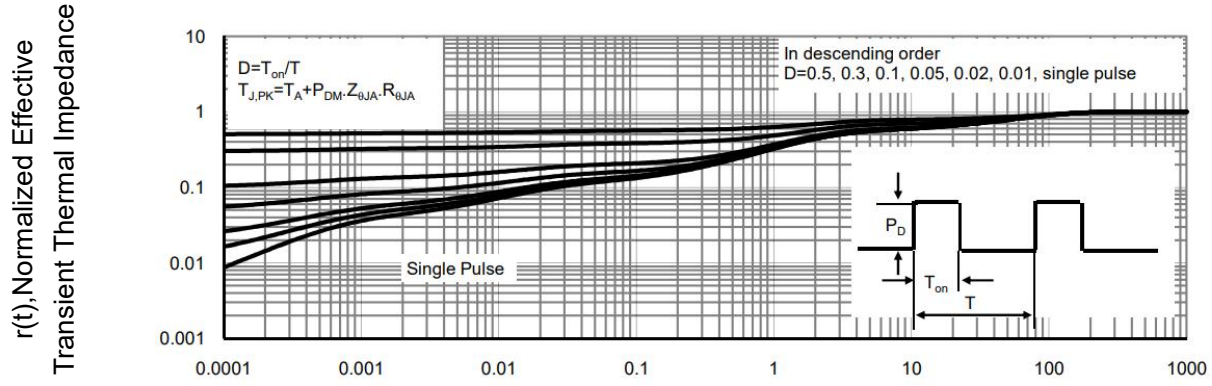

Figure 11 Normalized Maximum Transient Thermal Impedance