DATASHEET - M30C-FWRS-MS4



Key-operated actuators, Flat Front, not suitable for master key systems, 2 positions, maintained, MS4

Part no.	**M30C-FWRS-MS4**
Catalog No.	**187055**
Eaton Catalog No.	**M30C-FWRS-MS4**
EL-Nummer (Norway)	**0004315702**

Delivery program

Product range			RMQ-Titan
Basic function			Key-operated buttons
Single unit/Complete unit			Single unit
Design			key operation lock mechanism
			maintained
Function:			
			60°
			Not suitable for master key systems
			2 positions
Lock mechanism			MS4
Key withdrawable in position			
			0
			I
Degree of Protection			IP64
Front ring			Metal bezel
Connection to SmartWire-DT			yes with SWD-RMQ connections
Actuator travel and actuation force as per DIN EN 60947-5-1, K.5.4.1			
Minimum force for positive opening	N		0
Front dimensions			Ø 36 mm
Instructions			Stay-put/spring-return function, can be changed with coding parts M22-XC-Y Key withdraw convertible with coding adapters M22-XC-...
Information about equipment supplied			With 1 key

Technical data

General

Standards			IEC/EN 60947 VDE 0660
Lifespan, mechanical	Operations	x 10^6	> 0.1
Operating frequency	Operations/h		≦ 100
Operating torque		Nm	≦ 0.5
Climatic proofing			Damp heat, constant, to IEC 60068-2-78 Damp heat, cyclic, to IEC 60068-2-30
Degree of Protection			IP64
Ambient temperature			
Open		°C	-25 - +70
Mounting position			As required
Mechanical shock resistance		g	15 Shock duration 11 ms Sinusoidal according to IEC 60068-2-27

Design verification as per IEC/EN 61439

Technical data for design verification			
Operating ambient temperature min.		°C	-25
Operating ambient temperature max.		°C	70

Technical data ETIM 7.0

Low-voltage industrial components (EG000017) / Front element for selector switch (EC000222)

Electric engineering, automation, process control engineering / Low-voltage switch technology / Command and alarm device / Front element for selector switches (ecl@ss10.0.1-27-37-12-13 [AKF031014])

Number of switch positions		2
Type of control element		Key
Type of control element		Key
Suitable for illumination		No
Colour control element		Black
Colour indicator light cap		Other
Construction type lens		Round
Hole diameter	mm	30
Width opening	mm	0
Height opening	mm	0
Switching function latching		Yes
Spring-return		No
With front ring		Yes
Material front ring		Metal
Colour front ring		Chrome
Degree of protection (IP), front side		IP64
Degree of protection (NEMA)		Other

Dimensions

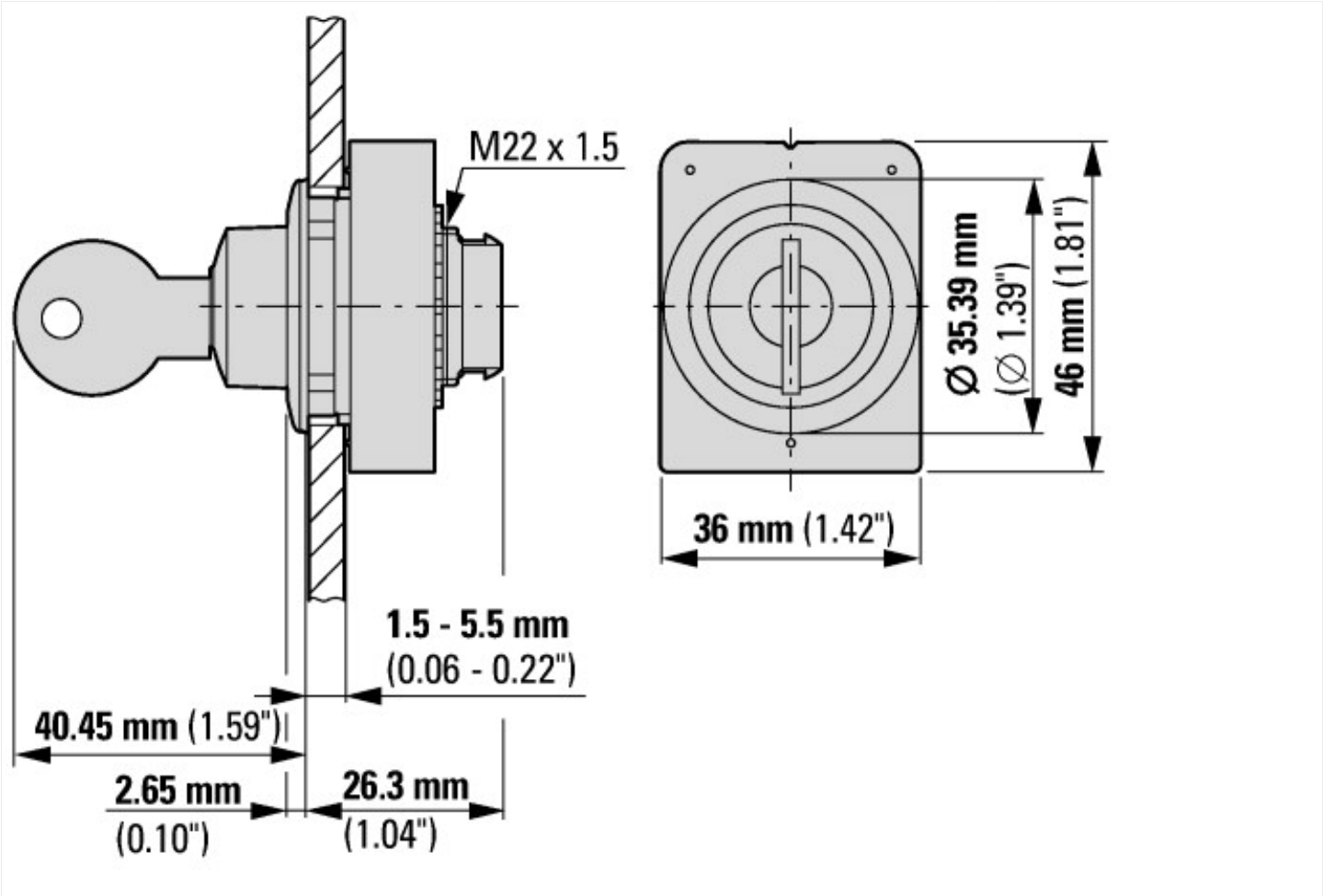

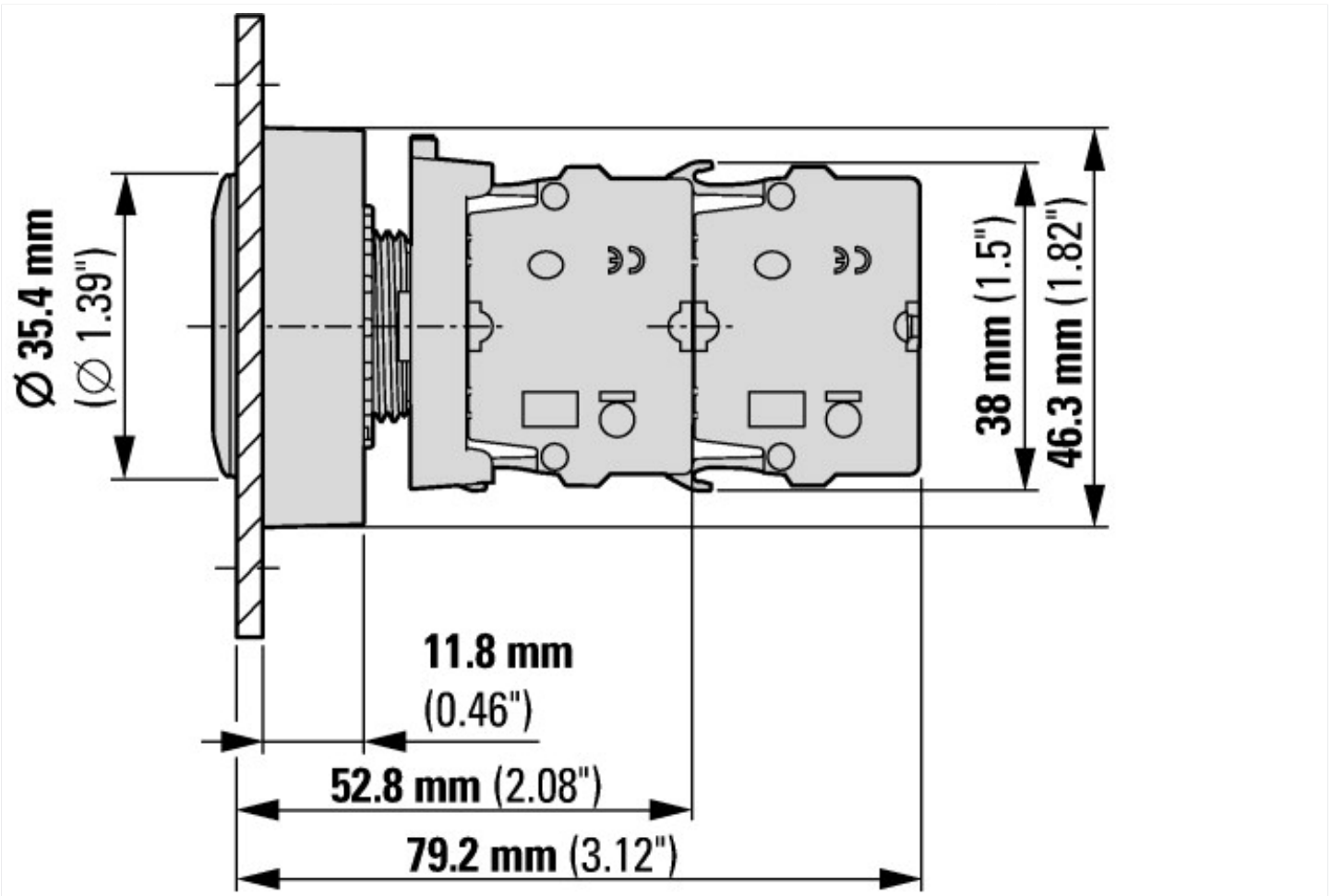

with 2 M22-K… standard contact elements

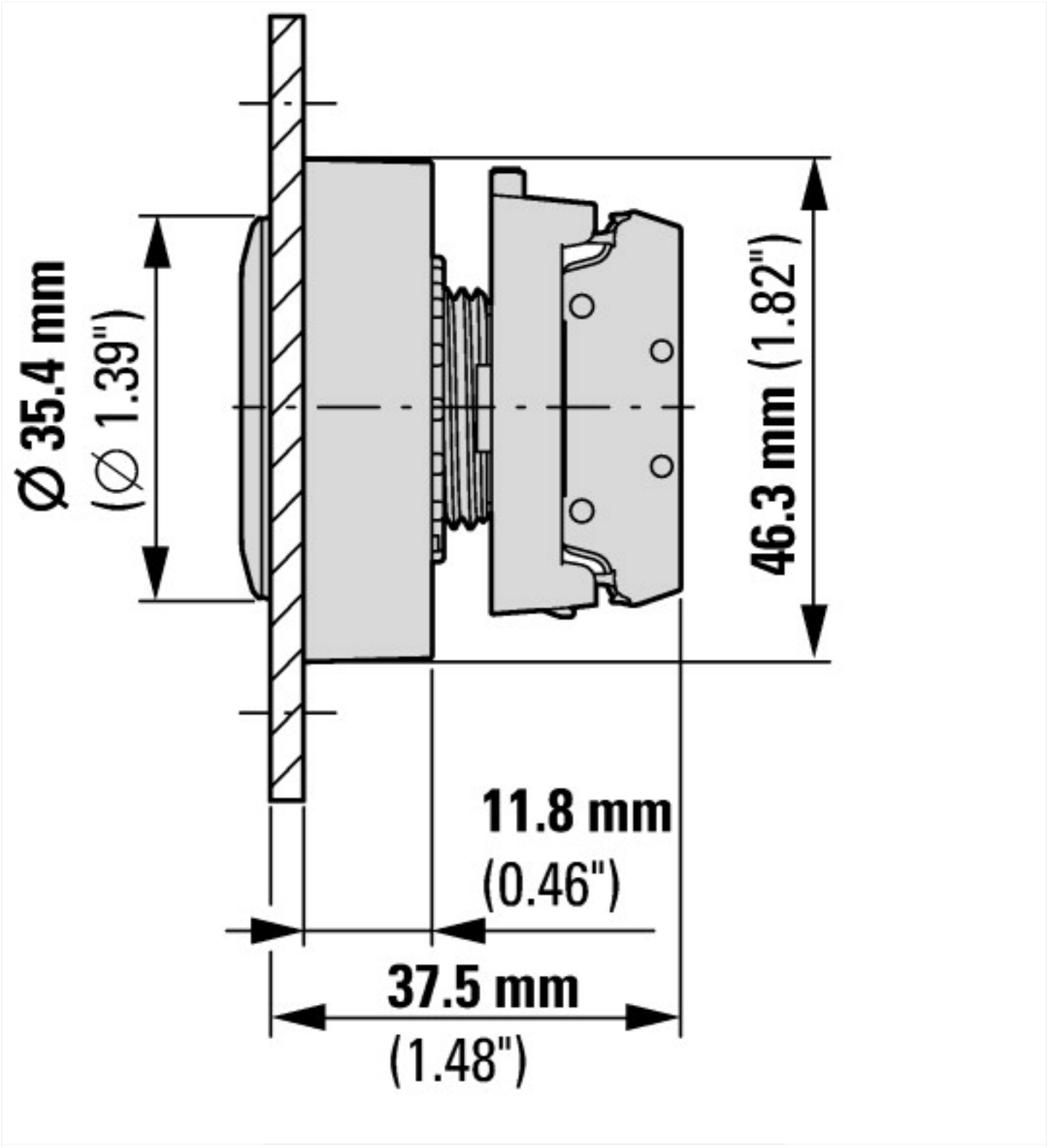

with M22-FK… flat rear contact elements

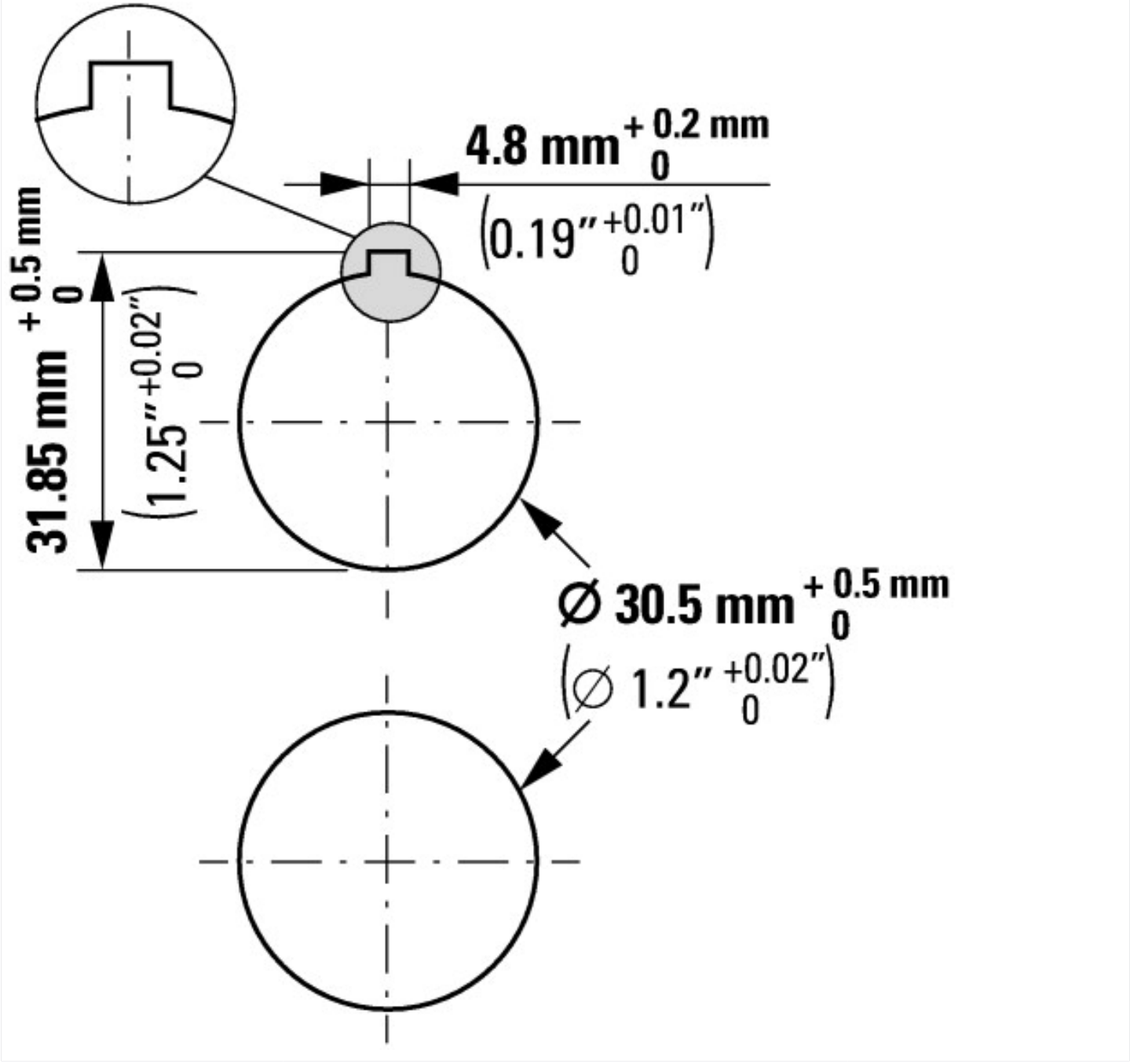

© 11/2018 by Eaton Industries GmbH

Unikeyic Electronics

Global Electronic Components Distributor

Click to view pricing, inventory, delivery, and lifecycle information:

EATON:

MOVGT20V270K AMLV08V31C250 MLVC08V016C190 MLVC12V033C400 MSMA1206R0300FCM CC06FA1-25A-TR MFSA1206R0300FCM NT08105F4050B1F TV1020-3R0605-R HV1325-2R7156-R CHSA5930R0010F DR125-100-R MSMA2512R0180FGN NT06104F3435B1H PTSLR12106V200 16LET ANL-250 VPH2-0116-R ATC-1 BK/PCD-5-R HM25030-1SR NGR20051BN00N 2822HC70-RTR BK/HTB-34M-R PTSLR12066V380 32006-H22 7505K4 MLVC12V038C310 MSMA2512R0080FGM PTSLR06036V200