S8050

TRANSISTOR (NPN)

FEATURES

Complementary to S8550

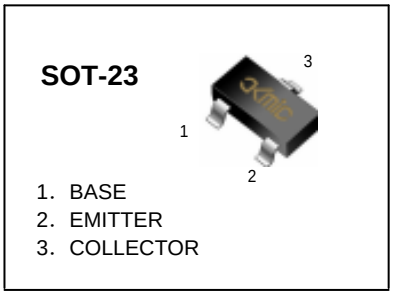

MARKING: J3Y

MAXIMUM RATINGS (T_A=25℃ unless otherwise noted)

Symbol	Parameter	value	units
V_{CBO}	Collector-Base Voltage	40	V
V_{CEO}	Collector-Emitter Voltage	25	V
V_{EBO}	Emitter-Base Voltage	5	V
I_C	Collector Current-Continuous	0.4	A
P_C	Collector Power Dissipation	0.2	W
T_J	Junction Temperature	150	℃
T_{STG}	Storage Temperature	-55-150	℃

ELECTRICAL CHARACTERISTICS (Tamb=25℃ unless otherwise specified)

Parameter	Symbol	Test conditions	MIN	TYP	MAX	UNIT
Collector-base breakdown voltage	$V_{(BR)CBO}$	I_C= 100μA, I_E=0	40			V
Collector-emitter breakdown voltage	$V_{(BR)CEO}$	I_C= 0.1mA, I_B=0	25			V
Emitter-base breakdown voltage	$V_{(BR)EBO}$	I_E=100μA, I_C=0	5			V
Collector cut-off current	I_{CBO}	V_{CB}=50V, I_E=0			0.1	μA
Collector cut-off current	I_{CEO}	V_{CE}=35V, I_B=0			0.1	μA
Emitter cut-off current	I_{EBO}	V_{EB}= 3V, I_C=0			0.1	μA
DC current gain	h_{FE}	V_{CE}=5V, I_C= 1mA	200		450	
Collector-emitter saturation voltage	V_{CE}(sat)	I_C=100 mA, I_B= 5mA			0.3	V
Base-emitter saturation voltage	V_{BE}(sat)	I_C=100 mA, $_B$= 5mA			1	V
Transition frequency	f_T	V_{CE}=5V, I_C= 10mA f=30MHz	150			MHz

Typical Characteristics

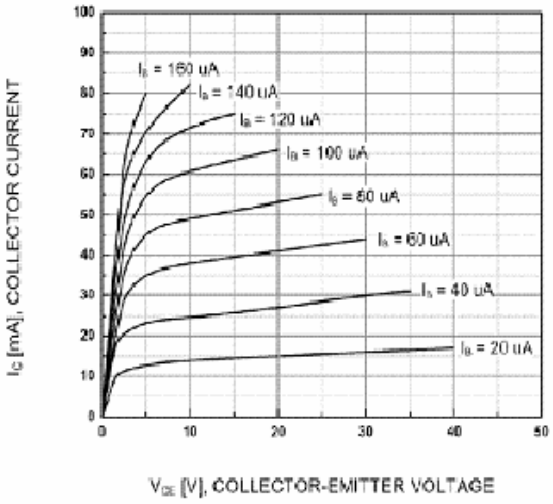

Static Characteristic

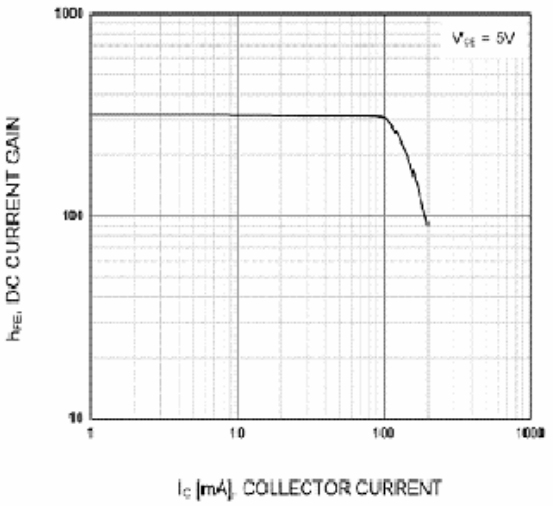

DC current Gain

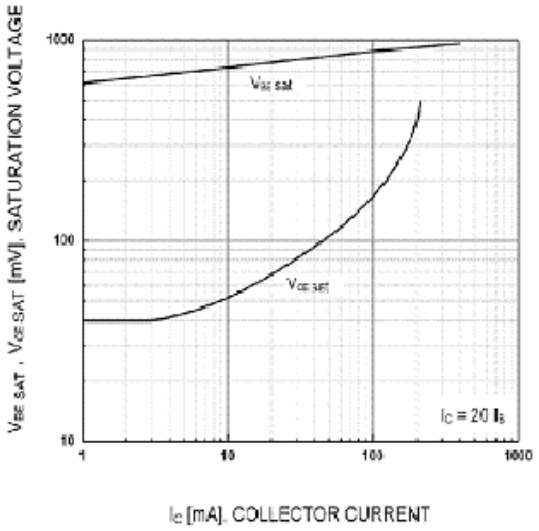

Base-Emitter Saturation Voltage
Collector-Emitter Saturation Voltage

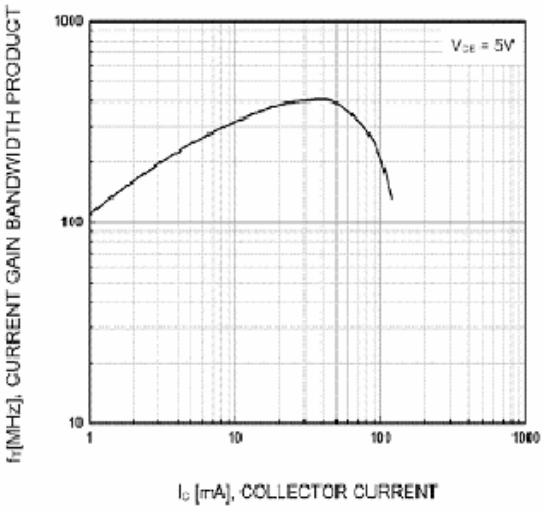

Current Gain Bandwidth Product

PACKAGE OUTLINE

Plastic surface mounted package; 3 leads **SOT-23**

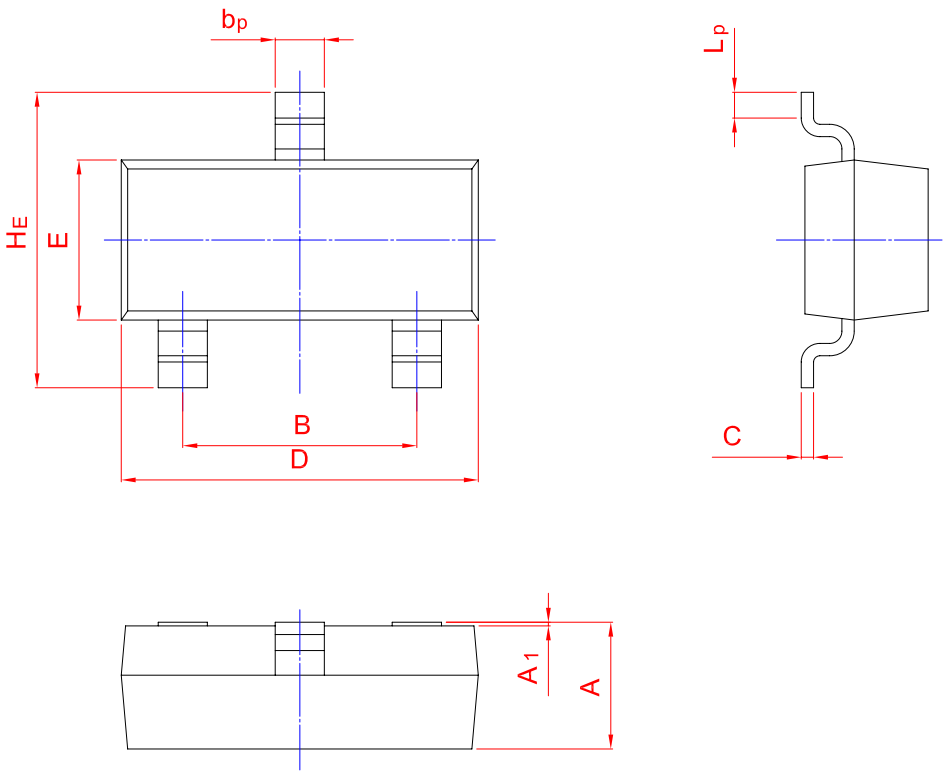

UNIT	A	B	bp	C	D	E	HE	A1	Lp
mm	1.40 0.95	2.04 1.78	0.50 0.35	0.19 0.08	3.10 2.70	1.65 1.20	3.00 2.20	0.100 0.013	0.50 0.20