SMC

5 Port Solenoid Valve

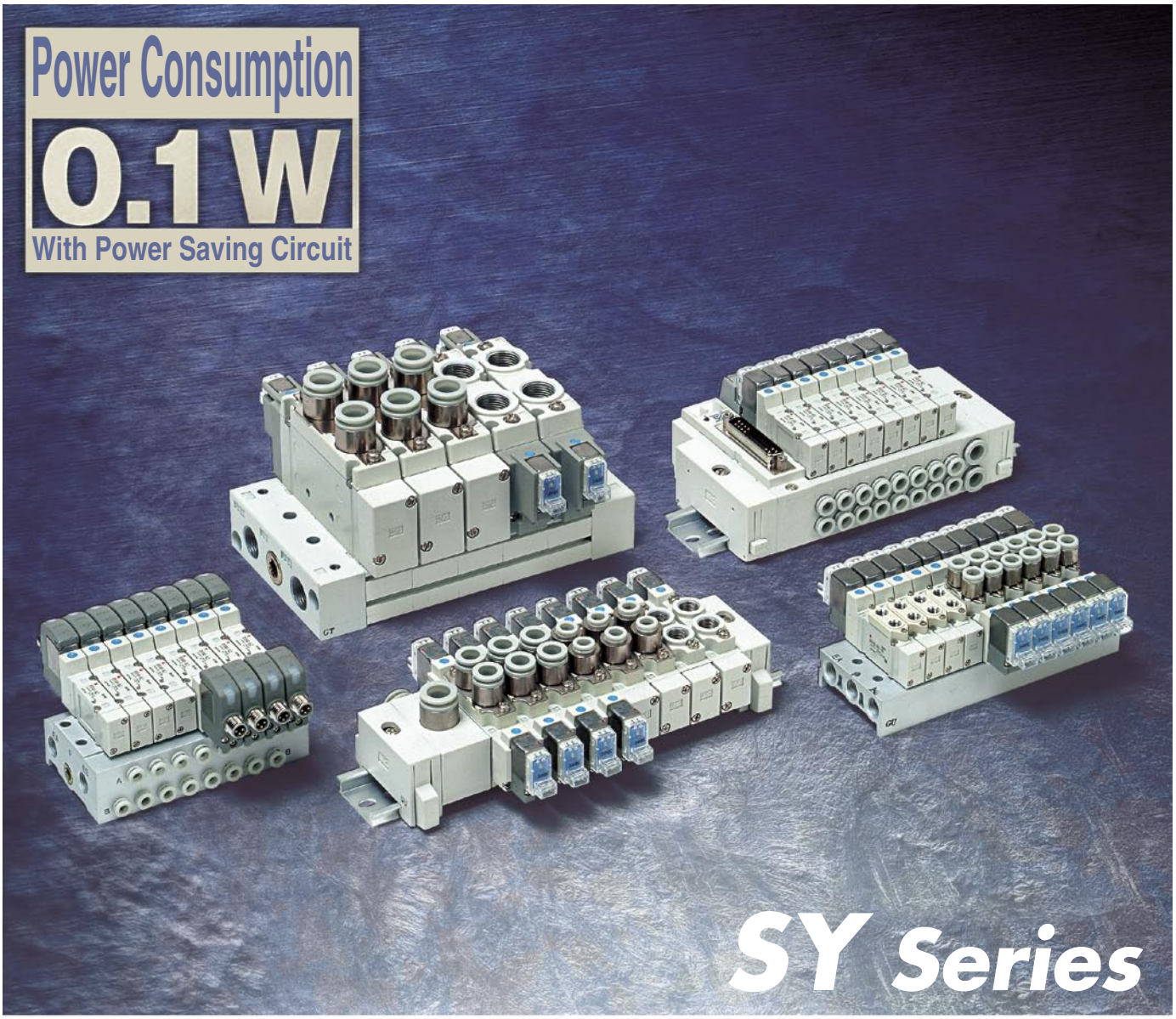



Improved pilot valve

Pilot valve cover is stronger using stainless steel.
Mounting thread is also reinforced from size M1.7 to M2.

- **Flow Characteristics**

Series	Flow characteristics			
	C [dm³/(s·bar)]	b	Cv	Q [ℓ/min(ANR)]
SY3000	1.1	0.28	0.29	276
SY5000	2.8	0.37	0.90	746
SY7000	4.5	0.28	1.4	1130
SY9000	10	0.29	2.5	2527

Cylinder Speed Chart

Use as a guide for selection.
Please confirm the actual conditions with SMC Sizing Program.

Body Ported

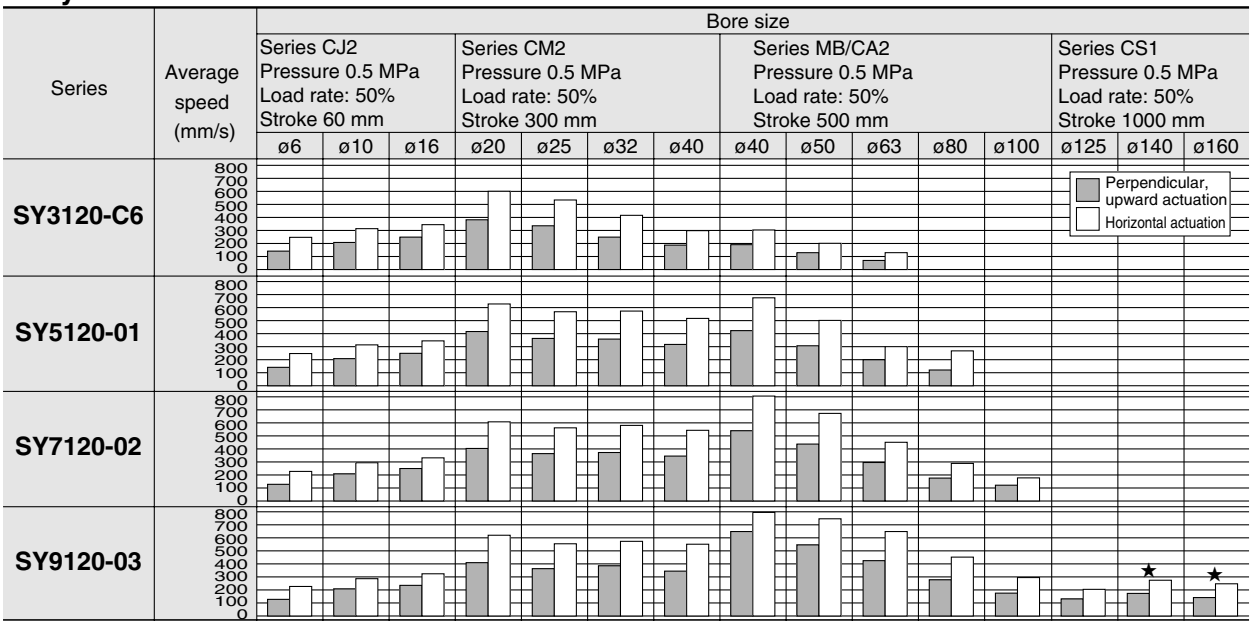

Base Mounted

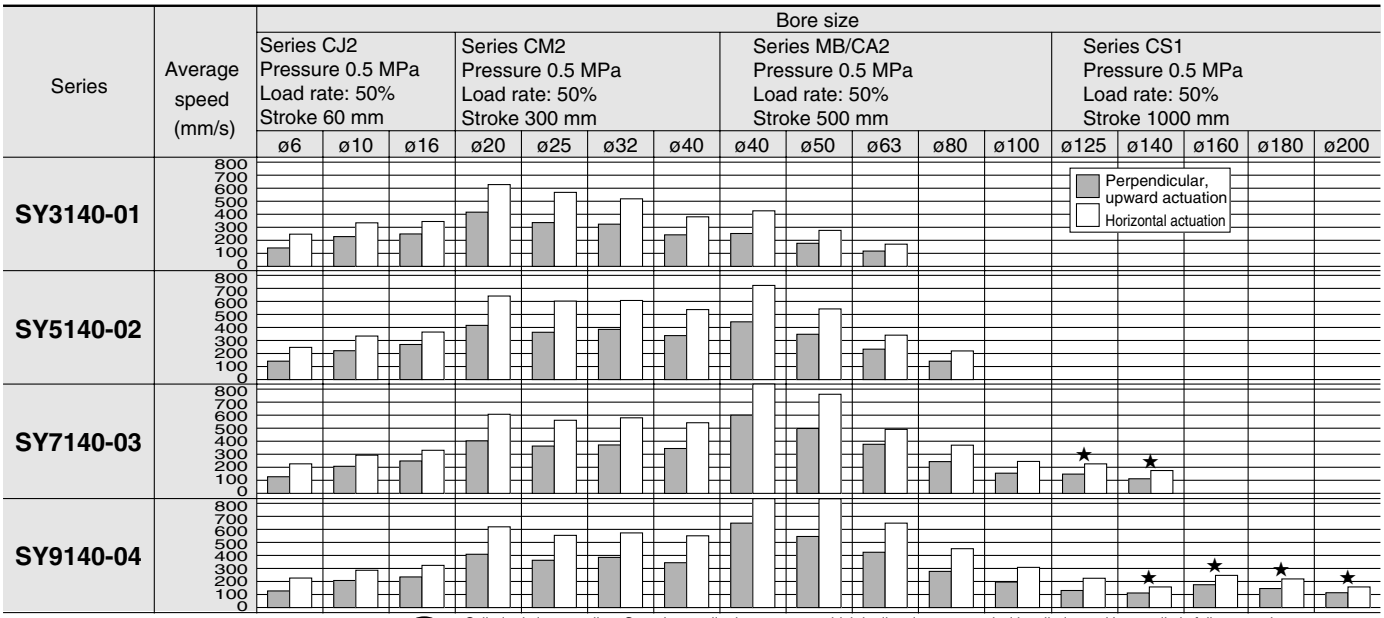

* Cylinder is in extending. Speed controller is meter-out, which is directly connected with cylinder and its needle is fully opened.
* Average speed of cylinder is obtained by dividing the full stroke time by the stroke.
* Load factor: ((Load weight x 9.8) /Theoretical force) x 100%
* The histograms with ★ marked are the case when piping is done by using steel.

Conditions

Body ported		Series CJ2	Series CM2	Series MB/CA2	Series CS1
SY3120-C6	Tubing bore x Length	T0604 x 1 m			–
	Speed controller	AS2051F-06			–
	Silencer	AN120-M5			–
SY5120-01	Tubing bore x Length	T0604 x 1 m	T0806 x 1 m		–
	Speed controller	AS3001F-06	AS3001F-08		–
	Silencer	AN101-01			–
SY7120-02	Tubing bore x Length	T0604 x 1 m	T1075 x 1 m		–
	Speed controller	AS3001F-06	AS4001F-10		–
	Silencer	AN110-01			–
SY9120-03	Tubing bore x Length	T0604 x 1 m	T1075 x 1 m	T1209 x 1 m	
	Speed controller	AS3001F-06	AS4001F-10	AS4001F-12	
	Silencer	AN200-02			AN202-02

Conditions [When using SGP (steel pipe)]

Body ported		Series CS1
SY9120-03	Tubing bore x Length	SGP10A x 1 m
	Speed controller	AS420-03
	Silencer	AN200-02

Conditions

Base mounted		Series CJ2	Series CM2	Series MB/CA2	Series CS1
SY3140-01	Tubing bore x Length	T0604 x 1 m			–
	Speed controller	AS3001F-06			–
	Silencer	AN110-01			–
SY5140-02	Tubing bore x Length	T0604 x 1 m	T0806 x 1 m		–
	Speed controller	AS3001F-06	AS3001F-08		–
	Silencer	AN101-01			–
SY7140-03	Tubing bore x Length	T0604 x 1 m	T1075 x 1 m	T1209 x 1 m	–
	Speed controller	AS3001F-06	AS4001F-10		–
	Silencer	AN200-02			–
SY9140-04	Tubing bore x Length	T0604 x 1 m	T1075 x 1 m	T1209 x 1 m	
	Speed controller	AS3001F-06	AS4001F-10	AS4001F-12	
	Silencer	AN200-02			

Conditions [When using SGP (steel pipe)]

Base mounted		Series CS1
SY7140-03	Tubing bore x Length	SGP10A x 1 m
	Speed controller	AS420-03
	Silencer	AN300-03
SY9140-04	Tubing bore x Length	SGP15A x 1 m
	Speed controller	AS420-04
	Silencer	AN400-04

Valve Variations

Series			Sonic conductance C [dm³/(s·bar)] {4/2→5/3 (A/B→EA/EB)}	Actuation					Voltage		Electrical entry						Note 1)
				2 position		3 position			DC	AC							
				Single	Double	Closed center	Exhaust center	Pressure center	24 V 12 V 6 V 5 V 3 V	100 V 50/60 Hz 110 V 50/60 Hz 200 V 50/60 Hz 220 V 50/60 Hz	Grommet	L plug connector	M plug connector	Note 4) DIN terminal	M8 connector	Light/surge voltage suppressor
Body ported	P.1 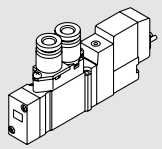	**SY3□20**	0.65	●	●	●	●	●	●	●	●	●	●	●	●	●
		SY5□20	2.4	●	●	●	●	●	●	●	●	●	●	●	●	●
		SY7□20	3.3	●	●	●	●	●	●	●	●	●	●	●	●	●
		SY9□20	8.6	●	●	●	●	●	●	●	●	●	●	●	●	●
Base mounted	P.19 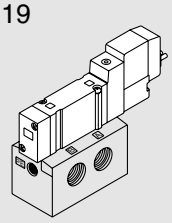	**SY3□40**	1.1	●	●	●	●	●	●	●	●	●	●	●	●	●
		SY5□40	2.8	●	●	●	●	●	●	●	●	●	●	●	●	●
		SY7□40	4.5	●	●	●	●	●	●	●	●	●	●	●	●	●
		SY9□40	10	●	●	●	●	●	●	●	●	●	●	●	●	●

Series		Manual override			Bracket	P, EA, EB port size					A, B port size														Valve option						
		Non-locking push type	Push-turn locking slotted type	Push-tum locking lever type		M5	1/8	1/4	3/8	1/2	M5	1/8	1/4	3/8	1/2	One-touch fitting									Exhaust throttle	Oil resistant, Other than designated turbine oil	Vacuum specifications	Low pressure specifications	External pilot	Note 3) Enclosure IP65	Interface regulator
																C4	C6	C8	C10	C12	N3	N7	N9	N11							
Body ported	**SY3□20**	●	●	●	●	●	—	—	—	—	●	—	—	—	—	●	●	—	—	—	●	●	—	—	●	▲	▲ External Pilot (Note 2)	▲ External Pilot (Note 2)	▲ External Pilot (Note 2)	● DIN terminal M8 connector	—
	SY5□20	●	●	●	●	—	●	—	—	—	—	●	—	—	—	●	●	●	—	—	●	●	●	—							
	SY7□20	●	●	●	●	—	● (EA, EB)	● (P)	—	—	—	—	●	—	—	—	—	●	●	—	—	—	●	●							
	SY9□20	●	●	●	—	—	—	●	—	—	—	—	●	●	—	—	—	●	●	●	—	—	●	●							
Base mounted	**SY3□40**	●	●	●	—	—	●	—	—	—	—	●	—	—	—	—	—	—	—	—	—	—	—	—	●	▲	● External pilot	● External pilot	● External pilot	● DIN terminal M8 connector	●
	SY5□40	●	●	●	—	—	—	●	—	—	—	—	●	—	—	—	—	—	—	—	—	—	—	—							●
	SY7□40	●	●	●	—	—	—	●	●	—	—	—	●	●	—	—	—	—	—	—	—	—	—	—	Sub-plate						●
	SY9□40	●	●	●	—	—	—	—	●	●	—	—	—	●	●	—	—	—	—	—	—	—	—	—							—

Note 1) All AC voltage models have built-in surge voltage suppressor.
Note 2) Body ported external pilot style (made to order) is not available for DIN terminal.
Note 3) Only available for DIN terminal and M8 connector.
Note 4) SY3000 does not have a DIN terminal which can be connected to a manifold.

Manifold Variations

	Manifold Variations		Valve Series	Wiring: Connection: Individual wiring	Flat ribbon cable (26 pins)	Flat ribbon cable (20 pins) connector box	Plug-in type D-sub connector (25 pins)	Plug-in type flat ribbon cable (26, 20, 10 pins)	Plug-in type terminal block (9, 18 pins)	PC wiring	Serial transmission unit	Common specifications: Positive common	Negative common
			5 port										
Body ported	**Bar stock type** **Individual wiring** ■ Direct piping to the main unit of a valve. Combination of different fittings is possible.	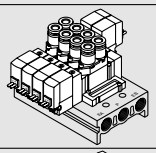	Type 20 P. 37	SY3□20 SY5□20 SY7□20	●	—	—	—	—	—	—	—	—	—
	Bar stock type **Flat ribbon cable** ■ A 26 pins MIL connector permits One-touch wiring of external cables in a bundle.	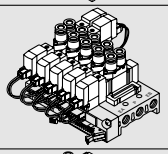	Type 20P P. 47	SY3□20 SY5□20 SY7□20	—	●	—	—	—	—	—	—	● In common	
	Stacking type **Individual wiring** ■ Manifold stations can be increased.	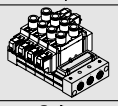	Type 23 P. 43	SY9□20	●	—	—	—	—	—	—	—	—	—
	Stacking type **Flat ribbon cable** ■ Manifold stations can be increased.	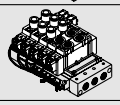	Type 23P P. 53	SY9□20	—	●	—	—	—	—	—	—	● In common	
	Cassette type **Individual wiring** ■ Size and weight reduced by eliminating the manifold base	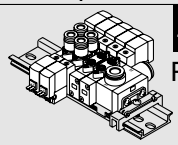	Type 60 P. 59	SY3□60 SY5□60 SY7□60	● ● ●	— — —	— — —	— — —	— — —	— — —	— — —	— — —	— — —	— — —
Base mounted	**Compact bar stock type** **Individual wiring** ■ The base mounting facilitates maintenance after valves are changed.	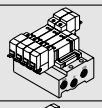	Type 41 P. 79	SY3□40 SY5□40	●	—	—	—	—	—	—	—	—	—
	Compact bar stock type **Flat ribbon cable** ■ A 26 pins MIL connector permits one-touch wiring of external cables in a bundle.	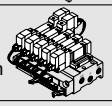	Type 41P P. 95	SY3□40 SY5□40	—	●	—	—	—	—	—	—	● In common	
	Bar stock type/Common external EXH **Individual wiring** ■ The base mounting facilitates maintenance after valves are changed. ■ Vacuum/low pressure combination system is possible.	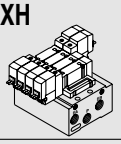	Type 42 P. 79	SY3□40 SY5□40 SY7□40	●	—	—	—	—	—	—	—	—	—
	Bar stock type/Common external EXH **Flat ribbon cable** ■ A 26 pins MIL connector permits one-touch wiring of external cables in a bundle. ■ Vacuum/low pressure combination system is possible.	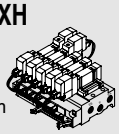	Type 42P P. 95	SY3□40 SY5□40 SY7□40	—	●	—	—	—	—	—	—	● In common	
	Stacking type **Individual wiring** ■ Manifold stations can be increased.	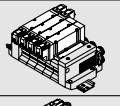	Type 43 P. 89	SY9□40	●	—	—	—	—	—	—	—	—	—
	Stacking type **Flat ribbon cable** ■ Manifold stations can be increased.	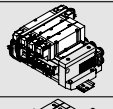	Type 43P P. 103	SY9□40	—	●	—	—	—	—	—	—	● In common	
	Stacking type/DIN rail mounted **Individual wiring** ■ Stations can be increased on the DIN rail. Integral mounting of other electric parts is possible, too.	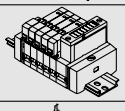	Type 45 P. 115	SY3□40 SY5□40	●	—	—	—	—	—	—	—	—	—
	Stacking type/DIN rail mounted **Connector box** ■ Stations can be increased on the DIN rail. The provided connector box permits one-touch connection of electric cables.	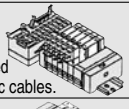	Type 45-A NA P. 127	SY3□40 SY5□40	—	—	●	—	—	—	●	—	●	●
	Stacking type/DIN rail mounted **Plug-in** ■ Stations can be increased on the DIN rail. ■ A variety of centralised wiring methods are possible.	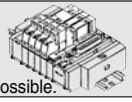	Type 45□ P. 135	SY3□40 SY5□40	—	—	—	●	●	●	●	●	●	●

● Standard ● Option ▲ Made to order (Refer to page "Made to Order".)

Manifold Variations

Manifold option								A, B port size											Valve option										
												One-touch fitting																		
Blanking plate	Individual SUP spacer	Individual EXH spacer	SUP block disk	EXH block disk	Label for block disk	Silencer for One-touch fitting	Built-in silencer	M5	1/8	1/4	3/8	C4	C6	C8	C10	C12	N3	N7	N9	N11	Mixed mounting SY3000 SY5000	Oil resistant (Other than designated turbine oil)	Vacuum specifications	Low pressure specifications	Different pressure	External pilot	Exhaust throttle	Bundle wiring	Mixed fitting sizes	IP65 enclosure	Interface regulator
○	○	○	—	—	—	—	—	●	—	—	—	●	●	—	—	—	●	●	—	—	—	▲	—	—	Individual SUP interface	—	Individual EXH interface	—	—	Note) ●	—
								—	●	—	—	●	●	●	—	—	●	●	●	—										Note) ●	
								—	—	●	—	—	—	●	●	—	—	—	●	●										Note) ●	
○	○	○	—	—	—	—	—	●	—	—	—	●	●	—	—	—	●	●	—	—	—	▲	—	—	Individual SUP interface	—	Individual EXH interface	●	—	—	—
								—	●	—	—	●	●	●	—	—	●	●	●	—											
								—	—	●	—	—	—	●	●	—	—	—	●	●											
○	○	○	○	○	○	—	—	—	—	●	●	—	—	●	●	●	—	—	●	●	—	▲	● External pilot	● External pilot	Individual SUP block disk	● External pilot	Individual EXH	—	—	Note) ●	—
○	○	○	○	○	○	—	—	—	—	●	●	—	—	●	●	●	—	—	●	●	—	▲	● External pilot	● External pilot	Individual SUP block disk	● External pilot	Individual EXH	●	—	—	—
○	—	—	○	○	○	○	—	●	—	—	—	●	●	—	—	—	●	●	—	—	—	▲	● External pilot	● External pilot	Individual SUP block disk	Individual SUP block disk	—	—	—	Note) ●	—
○	—	—	○	○	○	○	—	—	●	—	—	●	●	●	—	—	●	●	●	—	—	▲	● External pilot	● External pilot	Individual SUP block disk	Individual SUP block disk	—	—	—	Note) ●	—
○	—	—	○	○	○	○	—	—	—	●	—	—	—	●	●	—	—	—	●	●	—	▲	● External pilot	● External pilot	Individual SUP block disk	Individual SUP block disk	—	—	—	Note) ●	—
○	○	○	—	—	—	—	—	●	—	—	—	●	●	—	—	—	●	●	—	—	—	▲	—	—	Individual SUP interface	—	—	—	—	Note) ●	○
								—	●	—	—	—	●	●	—	—	—	●	●	—										Note) ●	
○	○	○	—	—	—	—	—	●	—	—	—	●	●	—	—	—	●	●	—	—	—	▲	—	—	Individual SUP interface	—	—	●	—	—	○
								—	●	—	—	—	●	●	—	—	—	●	●	—											
○	○	○	—	—	—	—	—	—	●	—	—	●	●	—	—	—	●	●	—	—	—	▲	—	—	Individual SUP interface	—	—	—	—	Note) ●	○
								—	—	●	—	—	●	●	—	—	—	●	●	—										Note) ●	
								—	—	●	—	—	—	—	●	—	—	—	—	●										Note) ●	
○	○	○	—	—	—	—	—	—	●	—	—	●	●	—	—	—	●	●	—	—	—	▲	—	—	Individual SUP interface	—	—	●	—	—	○
								—	—	●	—	—	●	●	—	—	—	●	●	—											
								—	—	●	—	—	—	—	●	—	—	—	—	●											
○	○	○	○	○	○	○	○	—	—	●	●	—	—	●	●	●	—	—	●	●	—	▲	● External pilot	● External pilot	Individual SUP block disk	—	Individual EXH	—	—	Note) ●	—
○	○	○	○	○	○	○	○	—	—	—	—	●	●	●	—	—	●	●	●	—	—	▲	● External pilot	● External pilot	Individual SUP block disk	● External pilot	Individual EXH	●	●	—	—
○	○	○	○	○	○	○	▲	—	—	—	—	●	●	—	—	—	●	●	—	—	▲	▲	▲ External pilot	▲ External pilot	Individual SUP spacer or block disk	—	—	—	●	Note) ●	○
								—	—	—	—	●	●	●	—	—	●	●	●	—										Note) ●	
○	○	○	○	○	○	○	▲	—	—	—	—	●	●	—	—	—	●	●	—	—	▲	▲	▲ External pilot	▲ External pilot	Individual SUP spacer or block disk	—	—	●	●	—	○
								—	—	—	—	●	●	●	—	—	●	●	●	—											
○	○	○	○	○	○	○	▲	—	—	—	—	●	●	—	—	—	●	●	—	—	▲	▲	▲ External pilot	▲ External pilot	Individual SUP spacer or block disk	—	—	●	●	—	—
								—	—	—	—	●	●	●	—	—	●	●	●	—											

Note) When using DIN terminal or M8 connector.
SY3000 does not have a DIN terminal which can be connected to a manifold.

5 Port Solenoid Valve
Series SY3000/5000/7000/9000
Body Ported
Single Unit

CAD

Refer to www.smcworld.com for details of products compatible with overseas standards.

How to Order

SY [5] [1] **20** [ ] — [5] [L] [ ] [ ] — [01] [ ] [ ] **-Q**

Series

3	SY3000
5	SY5000
7	SY7000
9	SY9000

Type of actuation

1	2 position single 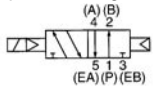
2	2 position double 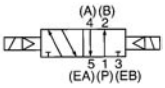
3	3 position closed center 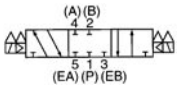
4	3 position exhaust center 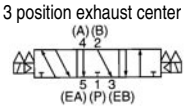
5	3 position pressure center 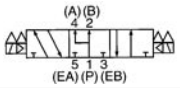

Coil specifications

-	Standard
T	With power saving circuit (24, 12 VDC only)

∗ Power saving circuit is not available in the case of D, DO or W□ type.

Rated voltage

For DC

5	24 VDC
6	12 VDC
V	6 VDC
S	5 VDC
R	3 VDC

For AC (50/60 Hz)

1	100 VAC
2	200 VAC
3	110 VAC [115 VAC]
4	220 VAC [230 VAC]

∗ DC specifications of type D and DO is only available with 12 and 24 VDC.
∗ AC specification is only available with D, DO type.

Electrical entry

24, 12, 6, 5, 3 VDC				24, 12 VDC/ 100, 110, 200, 220 VAC
Grommet	L plug connector	M plug connector		DIN terminal Note2)
G: Lead wire length 300 mm	L: With lead wire (Length 300 mm)	M: With lead wire (Length 300 mm)	MN: Without lead wire	D: With connector
H: Lead wire length 600 mm	LN: Without lead wire	LO: Without connector	MO: Without connector	DO: Without connector

24, 12, 6, 5, 3 VDC
M8 connector ∗
WO: Without connector cable
W□: With connector cable Note 1)

∗ LN, MN type: with 2 sockets.
∗ For DIN terminal of SY3000 series, refer to back page 10.
∗ DIN terminal type "Y" which conforms to EN-175301-803C (former DIN43650C) is also available. For details, refer to page 210.
∗ For connector cable of M8 connector, refer to back page 12.
∗ Connector M8 type "WA" conforming to IEC 60947-5-2 standard, is also available. For details, see page 211.

Note 1) Enter the cable length symbols in □. Please be sure to fill in the blank referring to back page 13.
Note 2) Except SY3000.

A, B port size

Thread piping

Symbol	Port size	Applicable series
M5	M5	SY3000
01	1/8	SY5000
02	1/4	SY7000
02	1/4	SY9000
03	3/8	

One-touch fitting (Metric size)

Symbol	Port size	Applicable series
C4	One-touch fitting for ø4	SY3000
C6	One-touch fitting for ø6	
C4	One-touch fitting for ø4	SY5000
C6	One-touch fitting for ø6	
C8	One-touch fitting for ø8	
C8	One-touch fitting for ø8	SY7000
C10	One-touch fitting for ø10	
C8	One-touch fitting for ø8	SY9000
C10	One-touch fitting for ø10	
C12	One-touch fitting for ø12	

One-touch fitting (Inch size)

Symbol	Port size	Applicable series
N3	One-touch fitting for ø 5/32"	SY3000
N7	One-touch fitting for ø 1/4"	
N3	One-touch fitting for ø 5/32"	SY5000
N7	One-touch fitting for ø 1/4"	
N9	One-touch fitting for ø 5/16"	
N9	One-touch fitting for ø 5/16"	SY7000
N11	One-touch fitting for ø 3/8"	
N9	One-touch fitting for ø 5/16"	SY9000
N11	One-touch fitting for ø 3/8"	

Bracket

-: Without bracket
F1: With foot bracket (2 position single only)
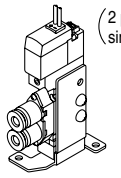
F2: With side bracket
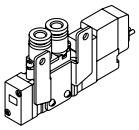

∗ SY9000 has no bracket.

Thread type

-	Rc
F	G
N	NPT
T	NPTF

∗ Except for M5

Manual override

-: Non-locking push type	D: Push-turn locking slotted type	E: Push-turn locking lever type
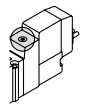	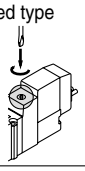	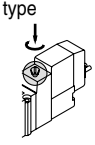

Light/surge voltage suppressor

Electrical entry for G, H, L, M, W

-	Without light/surge voltage suppressor
S	With surge voltage suppressor
Z	With light/surge voltage suppressor
R	With surge voltage suppressor (Non-polar type)
U	With light/surge voltage suppressor (Non-polar type)

∗ Power saving circuit is only available in the "Z" type.

Electrical entry for D (except SY3000)

-	Without light/surge voltage suppressor
S	With surge voltage suppressor
Z	With light/surge voltage suppressor

∗ DOZ is not available.
∗ For AC voltage valves there is no "S" option. It is already built-in to the rectifier circuit.

Note) When placing an order for body ported solenoid valve as a single unit, mounting bolt for manifold and gasket are not attached. Order them separately, if necessary. (For details, refer to page 56.)

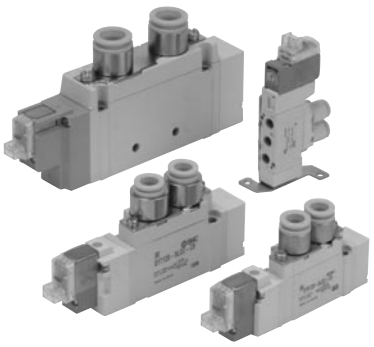

Specifications

Series		SY3000	SY5000	SY7000	SY9000
Fluid		Air			
Internal pilot Operating pressure range (MPa)	2 position single	0.15 to 0.7			
	2 position double	0.1 to 0.7			
	3 position	0.2 to 0.7			
Ambient and fluid temperature (°C)		–10 to 50 (No freezing. Refer to back page 3.)			
Max. operating frequency (Hz)	2 Position single, Double	10	5	5	5
	3 position	3	3	3	3
Manual override (Manual operation)		Non-locking push type, Push-turn locking slotted type, Push-turn locking lever type			
Pilot exhaust method		Common exhaust type for main and pilot valve			
Lubrication		Not required			
Mounting orientation		Unrestricted			
Impact/Vibration resistance (m/s²) Note)		150/30			
Enclosure		Dust proof (∗ DIN terminal and M8 connector: IP65)			

∗ Based on IEC60529)

Note) Impact resistance: No malfunction occurred when it is tested in the axial direction and at the right angles to the main valve and armature in both energised and de-energised states every once for each condition. (Values at the initial period)

Vibration resistance: No malfunction occurred in a one-sweep test between 45 and 2000 Hz. Test was performed at both energised and de-energised states in the axial direction and at the right angles to the main valve and armature. (Values at the initial period)

Made to Order
(For details, refer to pages 199 through to 213.)

Solenoid Specifications

Electrical entry			Grommet (G), (H) L plug connector (L) M plug connector (M)	DIN terminal (D) M8 connector (W)
			G, H, L, M, W	D
Coil rated voltage (V)	DC		24, 12, 6, 5, 3	24, 12
	AC 50/60 Hz		100, 110	200, 220
Allowable voltage fluctuation (%)			±10% of rated voltage ∗	
Power consumption (W)	DC	Standard	0.35 (With indicator light: 0.4 DIN terminal with indicator light: 0.45)	
		With power saving circuit	0.1 (With indicator light only)	
Apparent power (VA) ∗	AC	100 V	-	0.78 (With indicator light: 0.87)
		110 V [115 V]	- -	0.86 (With indicator light: 0.97) [0.94 (With indicator light: 1.07)]
		200 V	-	1.15 (With indicator light: 1.30)
		220 V [230 V]	- -	1.27 (With indicator light: 1.46) [1.39 (With indicator light: 1.60)]
Surge voltage suppressor			Diode (Varistor is for DIN terminal and Non-polar type.)	
Indicator light			LED (AC of DIN connector is neon light.)	

∗ In common between 110 VAC and 115 VAC, and between 220 VAC and 230 VAC.
∗ For 115 VAC and 230 VAC, the allowable voltage is –15% to +5% of rated voltage.
∗ S, Z and T type (with power saving circuit) should be used within the following allowable voltage fluctuation range due to a voltage drop caused by the internal circuit.
S and Z type: 24 VDC: –7% to +10%
12 VDC: –4% to +10%
T type: 24 VDC: –8% to +10%
12 VDC: –6% to +10%

Response Time

Note) Based on dynamic performance test, JIS B 8375-1981. (Coil temperature: 20°C, at rated voltage, without surge suppressor)

SY3000

Type of actuation	Response time (ms) (at the pressure of 0.5 MPa)		
	Without light/surge voltage suppressor	With light/surge voltage suppressor	
		Type S, Z	Type R, U
2 position single	12 or less	15 or less	12 or less
2 position double	10 or less	13 or less	10 or less
3 position	15 or less	20 or less	16 or less

SY5000

Type of actuation	Response time (ms) (at the pressure of 0.5 MPa)		
	Without light/surge voltage suppressor	With light/surge voltage suppressor	
		Type S, Z	Type R, U
2 position single	19 or less	26 or less	19 or less
2 position double	18 or less	22 or less	18 or less
3 position	32 or less	38 or less	32 or less

SY7000

Type of actuation	Response time (ms) (at the pressure of 0.5 MPa)		
	Without light/surge voltage suppressor	With light/surge voltage suppressor	
		Type S, Z	Type R, U
2 position single	31 or less	38 or less	33 or less
2 position double	27 or less	30 or less	28 or less
3 position	50 or less	56 or less	50 or less

SY9000

Type of actuation	Response time (ms) (at the pressure of 0.5 MPa)		
	Without light/surge voltage suppressor	With light/surge voltage suppressor	
		Type S, Z	Type R, U
2 position single	35 or less	41 or less	35 or less
2 position double	35 or less	41 or less	35 or less
3 position	62 or less	64 or less	62 or less

Flow Characteristics/Weight

Series SY3000

Valve model	Type of actuation		Port size 1, 5, 3 (P, EA, EB)	Port size 4, 2 (A, B)	Flow characteristics 1→4/2 (P→A/B) C (kdm³/(s·bar))	b	Cv	Q[ℓ/min(ANR)]	Flow characteristics 4/2→5/3 (A/B→EA/EB) C (kdm³/(s·bar))	b	Cv	Q[ℓ/min(ANR)]	Weight (g) Gro-mmet	L/M plug connector	W M8 connector
SY3□20-□-M5	2 position	Single	M5 x 0.8	M5 x 0.8	0.61	0.44	0.16	171	0.64	0.45	0.18	181	51	53	57
		Double											68	74	82
	3 position	Closed center			0.48	0.46	0.13	137	0.47	0.43	0.13	131	71	76	84
		Exhaust center			0.47	0.42	0.13	130	0.47 (0.44)	0.41 (0.37)	0.13 (0.12)	129 (117)			
		Pressure center			0.50 (0.41)	0.48 (0.35)	0.15 (0.11)	145 (108)	0.47	0.43	0.13	131			
SY3□20-□-C4	2 position	Single	M5 x 0.8	C4 One-touch fitting for ø4	0.72	0.29	0.18	182	0.64	0.34	0.17	167	60	63	67
		Double											78	83	91
	3 position	Closed center			0.59	0.28	0.15	148	0.59	0.30	0.15	150	81	86	94
		Exhaust center			0.63	0.35	0.16	166	0.42 (0.41)	0.34 (0.37)	0.11 (0.11)	110 (109)			
		Pressure center			0.76 (0.46)	0.42 (0.34)	0.21 (0.12)	210 (120)	0.59	0.29	0.15	149			
SY3□20-□-C6	2 position	Single		C6 One-touch fitting for ø6	0.76	0.30	0.19	193	0.65	0.39	0.17	176	56	59	63
		Double											74	79	87
	3 position	Closed center			0.76	0.55	0.24	233	0.60	0.33	0.16	156	77	82	90
		Exhaust center			0.65	0.32	0.16	167	0.64 (0.42)	0.31 (0.36)	0.17 (0.11)	164 (111)			
		Pressure center			0.77 (0.49)	0.34 (0.43)	0.21 (0.15)	201 (136)	0.61	0.34	0.16	159			

Note) ( ): denotes normal position.

* These values have been calculated according to ISO6358 and represent the flow rate measured in standard conditions at an upstream pressure of 0.6 MPa (relative pressure) and a differential pressure of 0.1MPa.

Series SY5000

Valve model	Type of actuation		Port size 1, 5, 3 (P, EA, EB)	Port size 4, 2 (A, B)	Flow characteristics 1→4/2 (P→A/B) C (dm³/(s·bar))	b	Cv	Q[ℓ/min(ANR)]	Flow characteristics 4/2→5/3 (A/B→EA/EB) C (dm³/(s·bar))	b	Cv	Q[ℓ/min(ANR)]	Weight (g) Gro-mmet	L/M plug connector	DIN terminal	W M8 connector
SY5□20-□-01	2 position	Single	1/8	1/8	1.9	0.35	0.49	499	2.4	0.39	0.61	648	70	72	93	76
		Double											88	93	135	101
	3 position	Closed center			1.7	0.43	0.45	473	1.8	0.35	0.46	473	93	98	140	106
		Exhaust center			1.5	0.44	0.41	420	2.5 (1.5)	0.32 (0.43)	0.59 (0.40)	644 (417)				
		Pressure center			2.2 (0.91)	0.46 (0.58)	0.61 (0.28)	626 (287)	1.8	0.38	0.46	483				
SY5□20-□-C4	2 position	Single		C4 One-touch fitting for ø4	0.75	0.43	0.20	209	0.85	0.64	0.30	285	94	96	117	100
		Double											111	117	159	125
	3 position	Closed center			0.74	0.40	0.19	201	0.84	0.57	0.28	263	117	122	164	130
		Exhaust center			0.75	0.36	0.19	198	0.84 (0.84)	0.64 (0.53)	0.30 (0.27)	281 (253)				
		Pressure center			0.78 (0.71)	0.44 (0.37)	0.21 (0.18)	219 (189)	0.84	0.57	0.27	263				
SY5□20-□-C6	2 position	Single		C6 One-touch fitting for ø6	1.5	0.33	0.33	389	2.0	0.37	0.52	533	88	91	112	95
		Double											106	111	153	119
	3 position	Closed center			1.3	0.31	0.33	333	1.6	0.32	0.39	412	111	116	158	124
		Exhaust center			1.3	0.33	0.33	337	1.8 (1.4)	0.35 (0.37)	0.44 (0.35)	473 (373)				
		Pressure center			1.7 (0.80)	0.31 (0.47)	0.42 (0.23)	435 (229)	1.7	0.33	0.44	441				
SY5□20-□-C8	2 position	Single		C8 One-touch fitting for ø8	1.9	0.21	0.45	458	2.3	0.29	0.57	581	80	82	103	86
		Double											98	103	145	111
	3 position	Closed center			1.6	0.29	0.39	404	1.7	0.38	0.46	456	103	108	150	116
		Exhaust center			1.4	0.38	0.39	375	2.0 (1.5)	0.37 (0.41)	0.52 (0.43)	533 (411)				
		Pressure center			2.2 (1.6)	0.32 (0.44)	0.56 (0.44)	567 (448)	1.8	0.41	0.50	493				

Note) ( ): denotes normal position.

* These values have been calculated according to ISO6358 and represent the flow rate measured in standard conditions at an upstream pressure of 0.6 MPa (relative pressure) and a differential pressure of 0.1MPa.

Series SY7000

Valve model	Type of actuation		Port size 1, 5, 3 (P, EA, EB)	Port size 4, 2 (A, B)	Flow characteristics 1→4/2 (P→A/B) C (dm³/(s·bar))	b	Cv	Q[ℓ/min(ANR)]	Flow characteristics 4/2→5/3 (A/B→EA/EB) C (dm³/(s·bar))	b	Cv	Q[ℓ/min(ANR)]	Weight (g) Gro-mmet	L/M plug connector	DIN terminal	W M8 connector
SY7□20-□-02	2 position	Single	1 (P) Port 1/4, 5, 3 (EA, EB) port 1/8	1/4	4.1	0.23	0.93	999	3.3	0.33	0.81	855	101	104	125	108
		Double											120	125	167	133
	3 position	Closed center			2.9	0.31	0.70	742	2.4	0.38	0.63	644	128	133	175	141
		Exhaust center			2.5	0.39	0.65	675	3.4 (2.1)	0.35 (0.38)	0.82 (0.54)	893 (563)				
		Pressure center			4.3 (2.4)	0.23 (0.32)	0.97 (0.61)	1048 (618)	2.2	0.39	0.58	594				
SY7□20-□-C8	2 position	Single		C8 (One-touch fitting for ø8)	3.2	0.26	0.77	794	3.2	0.37	0.82	852	107	110	131	114
		Double											126	132	174	140
	3 position	Closed center			2.6	0.24	0.63	637	2.4	0.31	0.62	614	134	140	182	148
		Exhaust center			2.4	0.25	0.57	592	2.6 (1.9)	0.42 (0.46)	0.70 (0.56)	718 (541)				
		Pressure center			3.3 (2.4)	0.28 (0.22)	0.78 (0.57)	829 (581)	2.2	0.34	0.60	574				
SY7□20-□-C10	2 position	Single		C10 (One-touch fitting for ø10)	3.8	0.26	0.86	943	3.2	0.34	0.82	835	103	105	126	109
		Double											122	127	169	135
	3 position	Closed center			2.8	0.27	0.67	699	2.4	0.21	0.59	578	130	135	177	143
		Exhaust center			2.5	0.25	0.59	616	2.7 (2.0)	0.38 (0.38)	0.70 (0.56)	724 (536)				
		Pressure center			3.8 (2.4)	0.25 (0.31)	0.89 (0.61)	937 (614)	2.3	0.38	0.61	617				

Note) ( ): denotes normal position.

* These values have been calculated according to ISO6358 and represent the flow rate measured in standard conditions at an upstream pressure of 0.6 MPa (relative pressure) and a differential pressure of 0.1MPa.

Series SY9000

Valve model	Type of actuation		Port size 1, 5, 3 (P, EA, EB)	Port size 4, 2 (A, B)	Flow characteristics 1→4/2 (P→A/B) C (dm³/(s·bar))	b	Cv	Q[ℓ/min(ANR)]	Flow characteristics 4/2→5/3 (A/B→EA/EB) C (dm³/(s·bar))	b	Cv	Q[ℓ/min(ANR)]	Weight (g) Gro-mmet	L/M plug connector	DIN terminal	W M8 connector
SY9□20-□-02	2 position	Single	1/4	1/4	7.0	0.33	1.7	1815	7.6	0.35	2.0	1997	241	244	265	248
		Double											260	266	308	274
	3 position	Closed center			6.7	0.37	1.7	1784	6.4	0.34	1.6	1670	284	290	332	298
		Exhaust center			6.4	0.36	1.6	1693	8.3 (4.1)	0.41 (0.27)	2.2 (0.91)	2274 (1023)				
		Pressure center			8.0 (3.2)	0.27 (0.34)	1.8 (0.76)	1997 (835)	6.5	0.22	1.4	1575				
SY9□20-□-03	2 position	Single		3/8	8.0	0.29	1.9	2021	8.0	0.33	2.0	2074	236	239	260	243
		Double											255	261	303	269
	3 position	Closed center			7.9	0.33	1.9	2048	6.6	0.27	1.6	1647	279	285	327	293
		Exhaust center			8.0	0.33	1.9	2074	8.7 (8.3)	0.34 (0.40)	2.2 (2.3)	2270 (2258)				
		Pressure center			8.9 (3.3)	0.34 (0.40)	2.2 (0.82)	2323 (898)	6.5	0.25	1.5	1603				
SY9□20-□-C8	2 position	Single		C8 (One-touch fitting for ø8)	4.3	0.28	0.96	1080	7.1	0.32	1.7	1829	293	296	317	300
		Double											312	318	360	326
	3 position	Closed center			4.3	0.31	0.99	1100	6.1	0.28	1.4	1532	336	342	384	350
		Exhaust center			4.3	0.3	0.99	1093	7.4 (3.8)	0.36 (0.29)	1.9 (0.86)	1957 (960)				
		Pressure center			4.4 (3.2)	0.35 (0.26)	1.0 (0.71)	1156 (794)	2.1	0.41	0.53	575				
SY9□20-□-C10	2 position	Single		C10 (One-touch fitting for ø10)	6.1	0.28	1.4	1532	7.9	0.33	1.9	2048	279	282	303	286
		Double											298	304	346	312
	3 position	Closed center			5.9	0.30	1.4	1500	6.5	0.26	1.5	1612	322	328	370	336
		Exhaust center			5.8	0.25	1.3	1430	8.4 (4.1)	0.33 (0.27)	2.0 (0.93)	2178 (1023)				
		Pressure center			6.3 (3.2)	0.29 (0.29)	1.5 (0.72)	1592 (809)	6.4	0.25	1.5	1578				
SY9□20-□-C12	2 position	Single		C12 (One-touch fitting for ø12)	7.0	0.25	1.6	1726	8.6	0.41	2.2	2356	265	268	289	272
		Double											284	290	332	298
	3 position	Closed center			6.9	0.24	1.6	1691	7.0	0.33	1.7	1815	308	314	356	322
		Exhaust center			6.6	0.23	1.4	1608	9.4 (4.5)	0.48 (0.32)	2.6 (1.0)	2718 (1159)				
		Pressure center			7.4 (3.2)	0.25 (0.34)	1.7 (0.74)	1825 (835)	6.6	0.23	1.5	1608				

Note) ( ): denotes normal position.

* These values have been calculated according to ISO6358 and represent the flow rate measured in standard conditions at an upstream pressure of 0.6 MPa (relative pressure) and a differential pressure of 0.1MPa.

Construction

Series SY

2 position single

JIS Symbol
2 position single

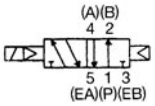

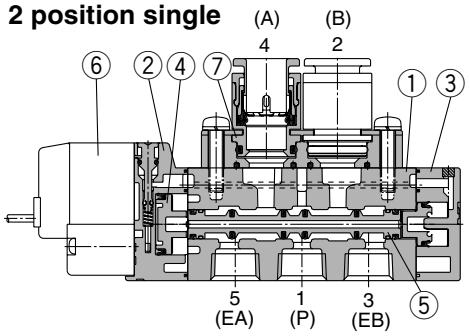

2 position double

JIS Symbol
2 position double

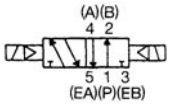

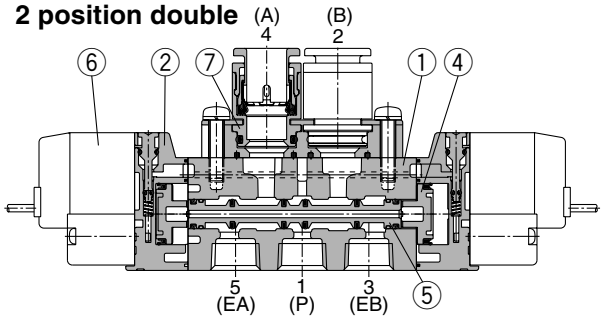

3 position closed center / exhaust center / pressure center

JIS Symbol
3 position closed center

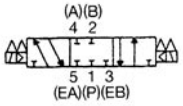

center

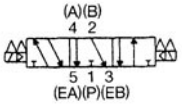

e center

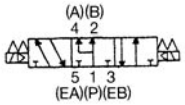

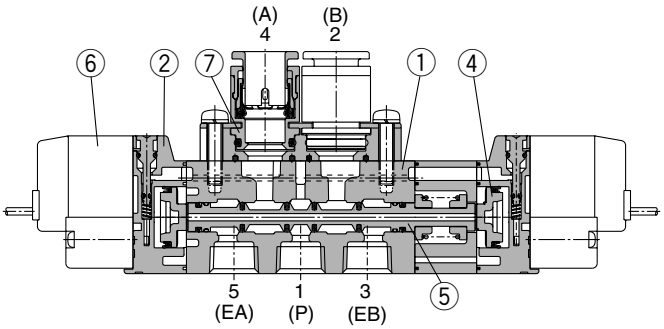

(This figure shows a closed center type.)

Component Parts

No.	Description	Material	Note
1	Body	Aluminum die-casted (SY3000: Zinc die-casted)	White
2	Adapter plate	Resin	White (SY9000: Gray)
3	End plate	Resin	White
4	Piston	Resin	–
5	Spool valve assembly	Aluminum, HNBR	–

Replacement Parts

No.	Description	No.
6	Pilot valve assembly	Refer to "How to Order Pilot Valve Assembly" on page 5.
7	M5 port block assembly	Refer to "How to Order Port Block Assembly" on page 6.

Bracket Assembly No.

Description	No.
Bracket (For F1)	SX$^{3}_{5}_{7}$000-16-2A (with mounting screw)
Bracket (For F2)	SX$^{3}_{5}_{7}$000-16-1A (with mounting screw)

∗ SY9000 has no bracket.

How to Change Port Block Assembly

If using body port type, both A and B port sizes can be changed by replacing the port block assembly mounted on the body. When changing this block assembly, the correct screw torque must be achieved to avoid possible air leakage.

For SY5000

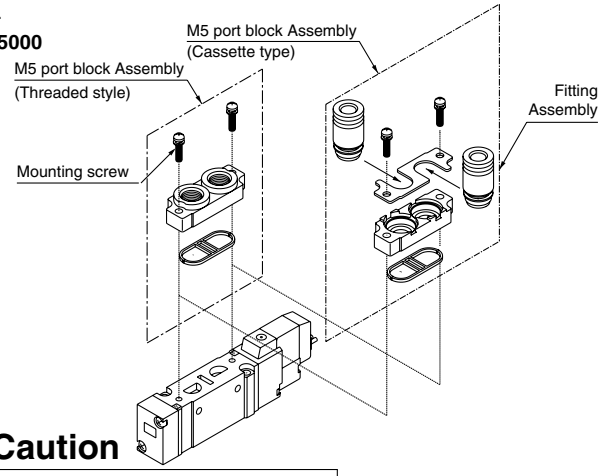

⚠ Caution

Mounting screw tightening torques

SY3000 (M2): 0.12 N·m
SY$^{5}_{7}$000 (M3): 0.6 N·m
SY9000 (M4): 1.4 N·m

∗ Refer to "How to Order Port Block Assembly" on page 6 for part no.

How to Order Pilot Valve Assembly

V111 □ — 5 G □

Coil specifications

-	Standard
T	With power saving circuit (24 VDC, 12 VDC only)

∗ Power saving circuit is not available in the case of D, DO or W□ type.

Rated voltage

5	24 VDC
6	12 VDC
V	6 VDC
S	5 VDC
R	3 VDC

Light/surge voltage suppressor

Nil	Without light/surge voltage suppressor
S	With surge voltage suppressor
Z	With light/surge voltage suppressor
R	With surge voltage suppressor (Non-polar type)
U	With light/surge voltage suppressor (Non-polar type)

∗ Power saving circuit is only available in the "Z" type.

Electrical entry

G	Grommet, 300 mm lead wire	
H	Grommet, 600 mm lead wire	
L	L plug connector	With lead wire
LN		Without lead wire
LO		Without connector
M	M plug connector	With lead wire
MN		Without lead wire
MO		Without connector
WO	M8 connector	Without connector cable
W□		With connector cable Note 1)

∗ For connector cable of M8 connector, refer to back page 12.
Note 1) Enter the cable length symbols in □. Please be sure to fill in the blank referring to back page 13.

How to Order Connector Assembly for L/M Plug Connector

For DC: SY100 − 30 − 4A − □

Without lead wire: SY100 − 30 − A

(with connector and 2 of sockets only)

Lead wire length

-	300 mm
6	600 mm
10	1000 mm
15	1500 mm
20	2000 mm
25	2500 mm
30	3000 mm
50	5000 mm

How to Order M8 Connector Cable

■ **Straight type**

V100 − 49 − 1 − □

Cable length

1	300 mm
2	500 mm
3	1000 mm
4	2000 mm
7	5000 mm

■ **DIN terminal type**

V115 — 5 D □

Rated voltage

5	24 VDC
6	12 VDC
1	100 VAC 50/60 Hz
2	200 VAC 50/60 Hz
3	110 VAC 50/60 Hz [115 VAC 50/60 Hz]
4	220 VAC 50/60 Hz [230 VAC 50/60 Hz]

∗ DC specifications of type D and DO is only available with 12 and 24 VDC.

Light/surge voltage suppressor

-	Without light/surge voltage suppressor
S	With surge voltage suppressor (Non-polar type)
Z	With light/surge voltage suppressor (Non-polar type)

∗ DOZ is not available.
∗ For AC voltage valves there is no "S" option. It is already built-in to the rectifier circuit.

Electrical entry

D	DIN terminal	With connector
DO		Without connector

Note) Do not replace V111 (G, H, L, M) to V115 (DIN terminal) and vice versa when replacing pilot valve assembly only.

How to Order Port Block Assembly

SY □ 000 — 6A — □ □

Series

3	SY3000
5	SY5000
7	SY7000
9	SY9000

Thread type

Nil	Rc
F	G
N	NPT
T	NPTF

∗ Except for M5

A, B port size

Thread piping

Symbol	Port size	Applicable series
M5	M5	SY3000
01	1/8	SY5000
02	1/4	SY7000
02	1/4	SY9000
03	3/8	

One-touch fitting (Metric size)

Symbol	Port size	Applicable series
C4	One-touch fitting for ø4	SY3000
C6	One-touch fitting for ø6	
C4	One-touch fitting for ø4	SY5000
C6	One-touch fitting for ø6	
C8	One-touch fitting for ø8	
C8	One-touch fitting for ø8	SY7000
C10	One-touch fitting for ø10	
C8	One-touch fitting for ø8	SY9000
C10	One-touch fitting for ø10	
C12	One-touch fitting for ø12	

One-touch fitting (Inch size)

Symbol	Port size	Applicable series
N3	One-touch fitting for ø5/32"	SY3000
N7	One-touch fitting for ø1/4"	
N3	One-touch fitting for ø5/32"	SY5000
N7	One-touch fitting for ø1/4"	
N9	One-touch fitting for ø5/16"	
N9	One-touch fitting for ø5/16"	SY7000
N11	One-touch fitting for ø3/8"	
N9	One-touch fitting for ø5/16"	SY9000
N11	One-touch fitting for ø3/8"	

∗ Only replacement of the fittings assembly is possible.

Metric size

SY3000	One-touch fitting for ø4	VVQ1000-50A-C4
	One-touch fitting for ø6	VVQ1000-50A-C6
SY5000	One-touch fitting for ø4	VVQ1000-51A-C4
	One-touch fitting for ø6	VVQ1000-51A-C6
	One-touch fitting for ø8	VVQ1000-51A-C8
SY7000	One-touch fitting for ø8	VVQ2000-51A-C8
	One-touch fitting for ø10	VVQ2000-51A-C10
SY9000	One-touch fitting for ø8	VVQ4000-50B-C8
	One-touch fitting for ø10	VVQ4000-50B-C10
	One-touch fitting for ø12	VVQ4000-50B-C12

Inch size

SY3000	One-touch fitting for ø5/32"	VVQ1000-50A-N3
	One-touch fitting for ø1/4"	VVQ1000-50A-N7
SY5000	One-touch fitting for ø5/32"	VVQ1000-51A-N3
	One-touch fitting for ø1/4"	VVQ1000-51A-N7
	One-touch fitting for ø5/16"	VVQ1000-51A-N9
SY7000	One-touch fitting for ø5/16"	VVQ2000-51A-N9
	One-touch fitting for ø3/8"	VVQ2000-51A-N11
SY9000	One-touch fitting for ø5/16"	VVQ4000-50B-N9
	One-touch fitting for ø3/8"	VVQ4000-50B-N11

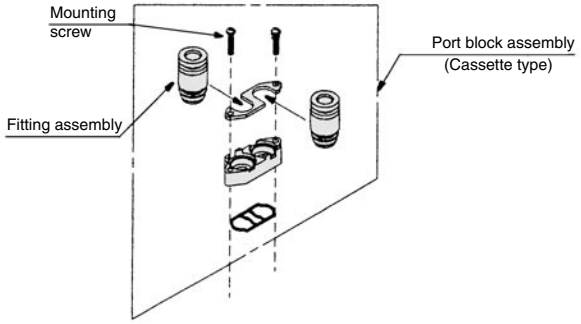

Dimensions: Series SY3000

2 position single

Grommet (G), (H): SY3120-□$^{G}_{H}$□□-$^{C4, N3}_{C6, N7}$(-F2)-Q

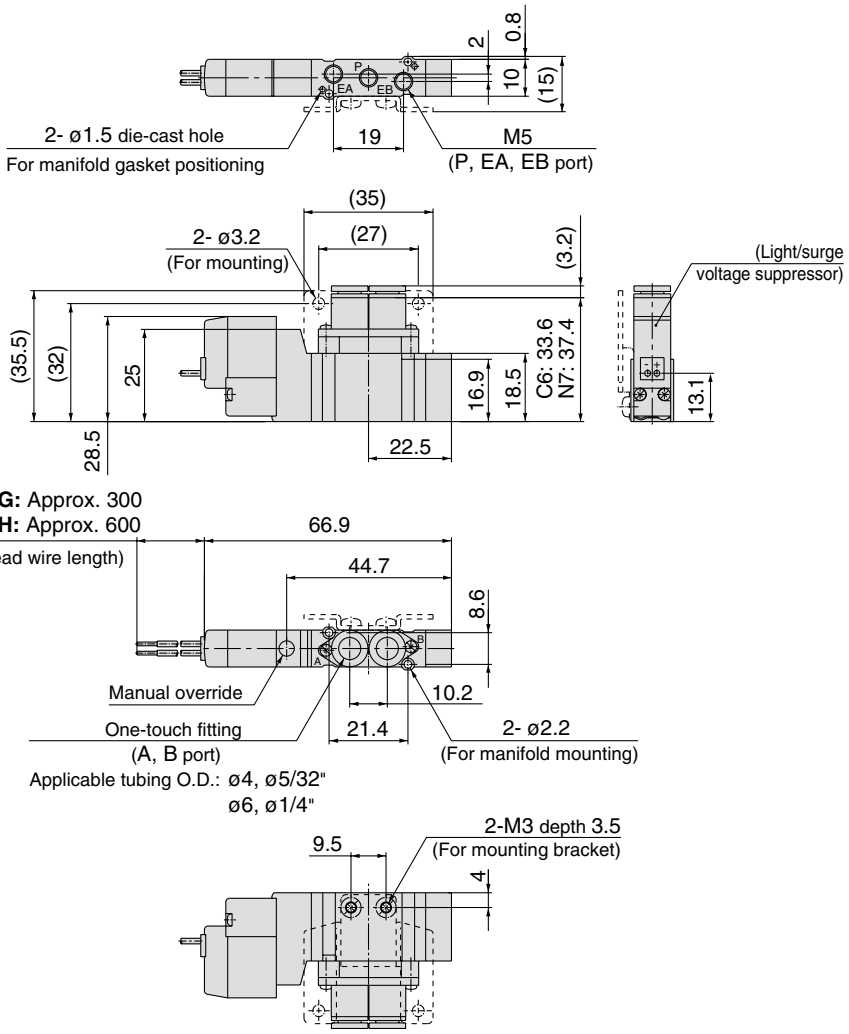

Foot bracket

SY3120-□$^{G}_{H}$□□-$^{C4, N3}_{C6, N7}$-F1-Q

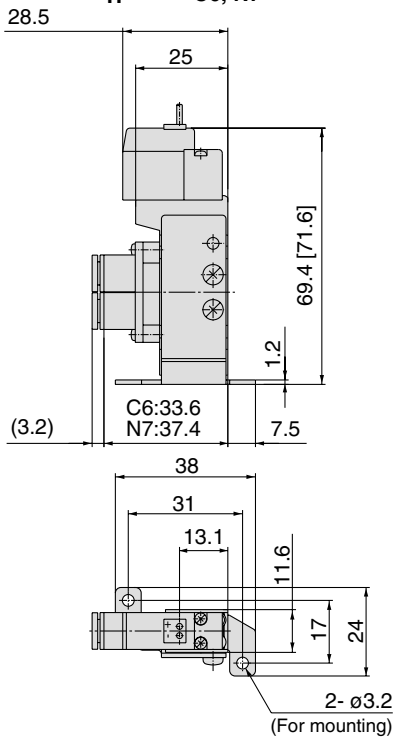

SY3120-□$^{G}_{H}$□□-M5(-F2)-Q

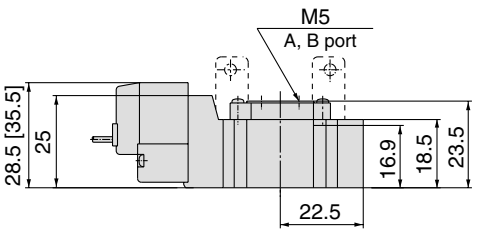

L plug connector (L):

SY3120-□L□□-$^{C4, N3}_{C6, N7}$(-F$^{1}_{2}$)-Q

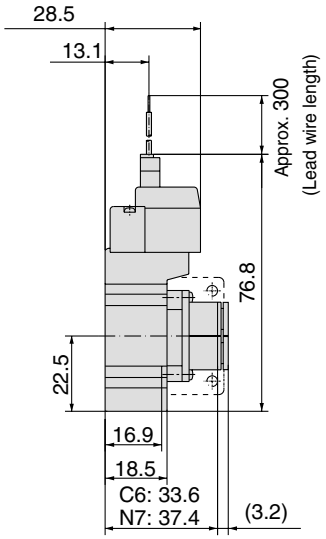

M plug connector (M):

SY3120-□M□□-$^{C4, N3}_{C6, N7}$(-F$^{1}_{2}$) -Q

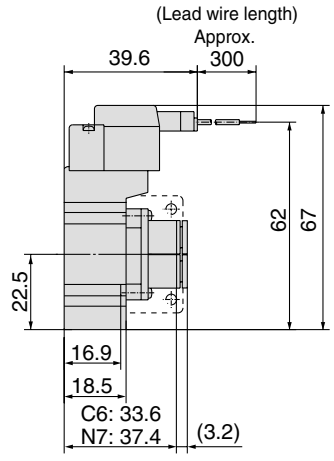

M8 connector (WO):

SY3120-□WO□□-$^{C4, N3}_{C6, N7}$(-F$^{1}_{2}$) -Q

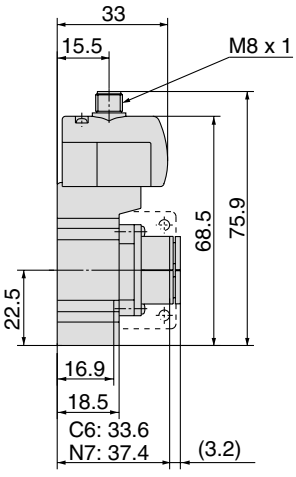

Note) Refer to back page 12 for dimensions of connector types.

Dimensions: Series SY3000

2 position double
Grommet (G), (H): SY3220-□ G/H □□- C4, N3 / C6, N7 (-F2)-Q

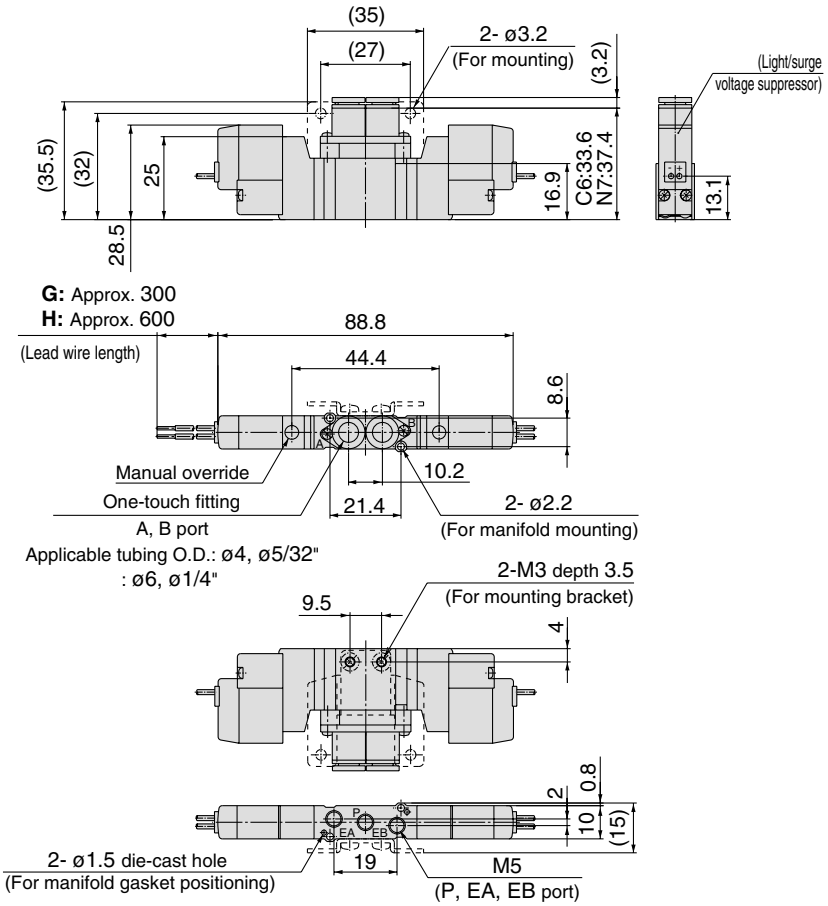

SY3220-□ G/H □□-M5(-F2)-Q

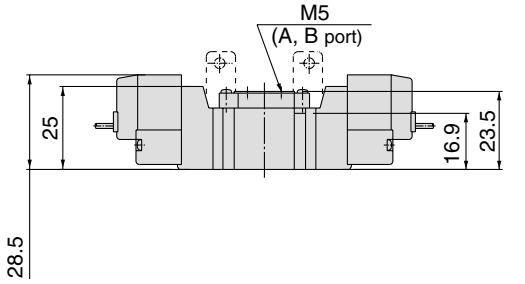

L plug connector (L):
SY3220-□L□□- C4, N3 / C6, N7 (-F1/2)-Q

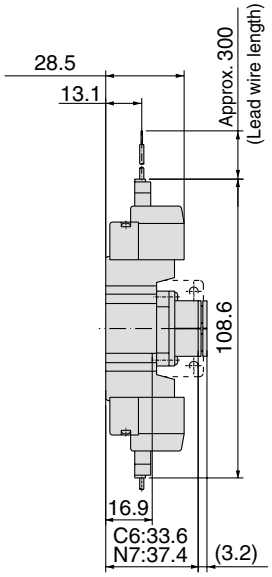

M plug connector (M):
SY3220-□M□□- C4, N3 / C6, N7 (-F1/2) -Q

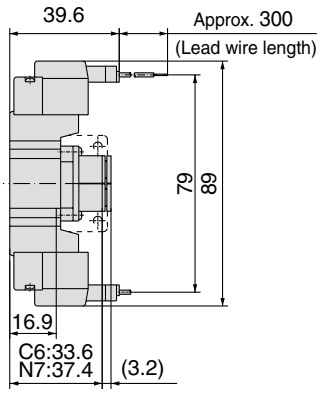

M8 connector (WO):
SY3220-WO□□- C4, N3 / C6, N7 (-F1/2) -Q

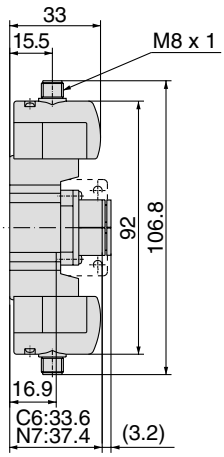

Note) Refer to back page 12 for dimensions of connector types.

Dimensions: Series SY3000

3 position closed center / exhaust center / pressure center

Grommet (G), (H): SY3$^{3}_{5}$20-□$^{G}_{H}$□□-$^{C4, N3}_{C6, N7}$(-F2)-Q

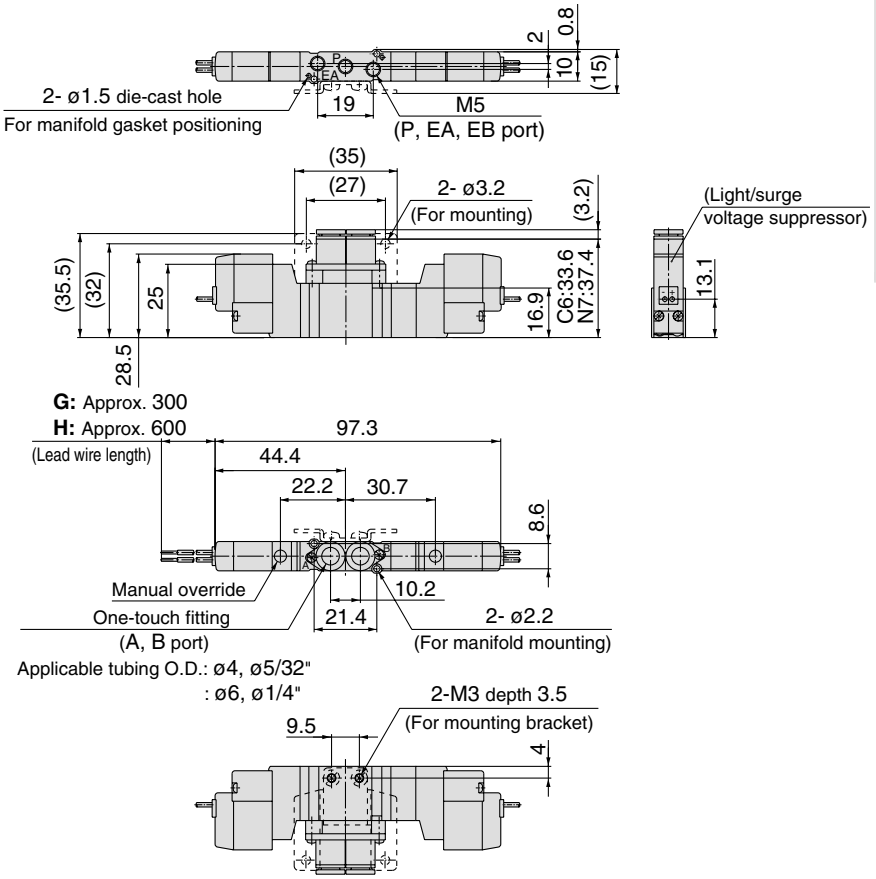

SY3$^{3}_{5}$20-□$^{G}_{H}$□□-M5(-F2)-Q

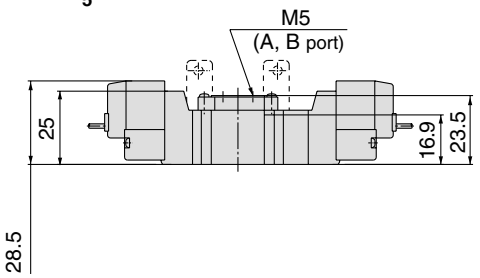

L plug connector (L):

SY3$^{3}_{5}$20-□L□□-$^{C4, N3}_{C6, N7}$(-F2)-Q

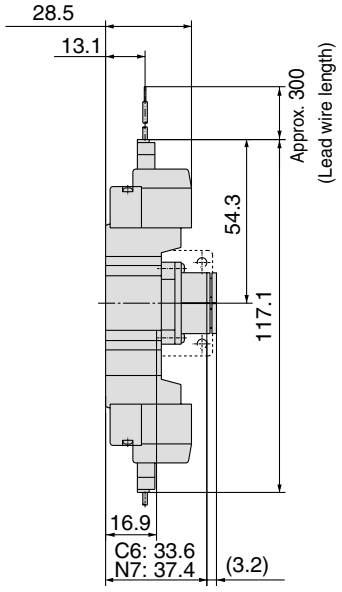

M plug connector (M):

SY3$^{3}_{5}$20-□M□□-$^{C4, N3}_{C6, N7}$(-F2)-Q

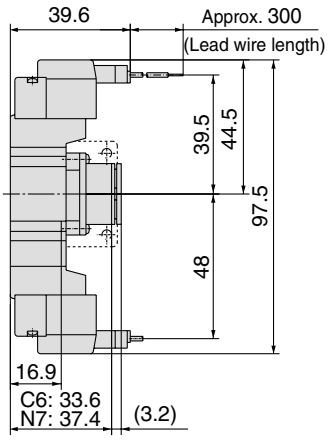

M8 connector (WO):

SY3$^{3}_{5}$20-□WO□□-$^{C4, N3}_{C6, N7}$(-F2)-Q

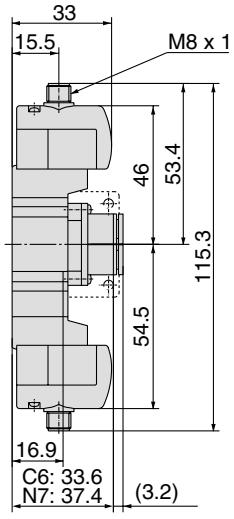

Note) Refer to back page 12 for dimensions of connector types.

Dimensions: Series SY5000

2 position single

Grommet (G), (H): SY5120-□$^{G}_{H}$□□-$^{C4, N3}_{C6, N7, C8, N9}$□(-F2)-Q

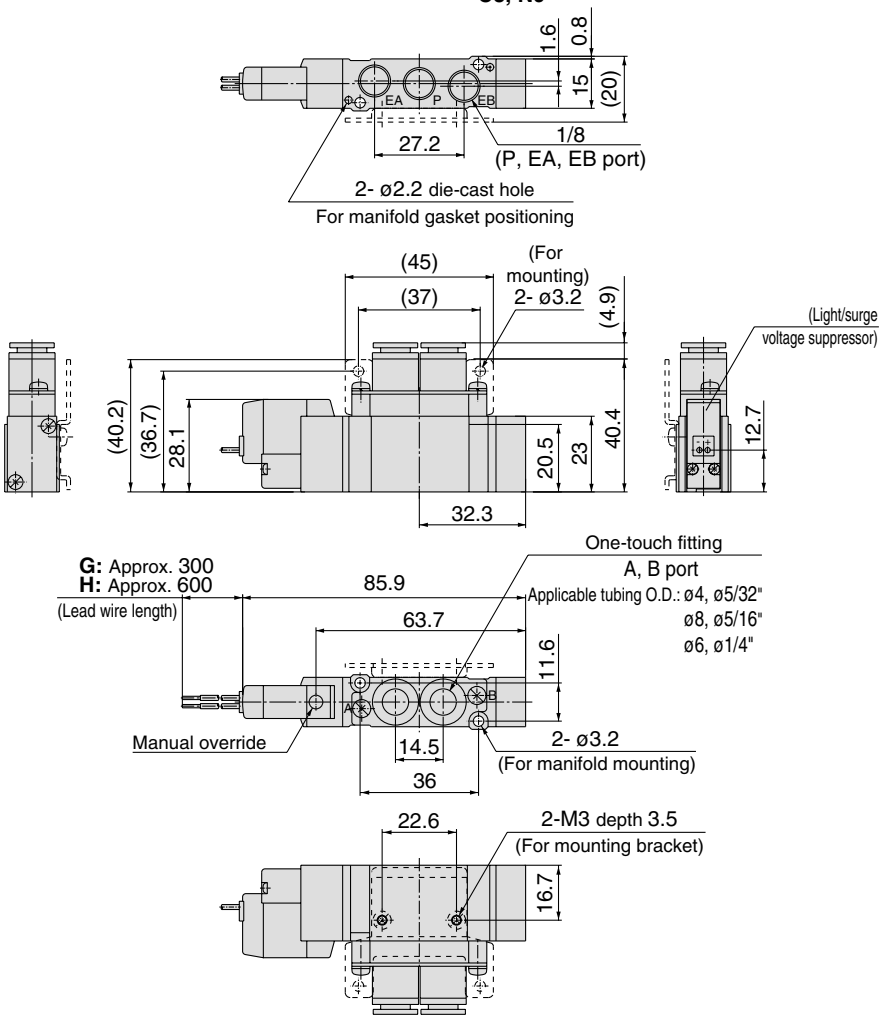

Foot bracket

SY5120-□$^{G}_{H}$□□-$^{C4, N3}_{C6, N7, C8, N9}$□-F1-Q

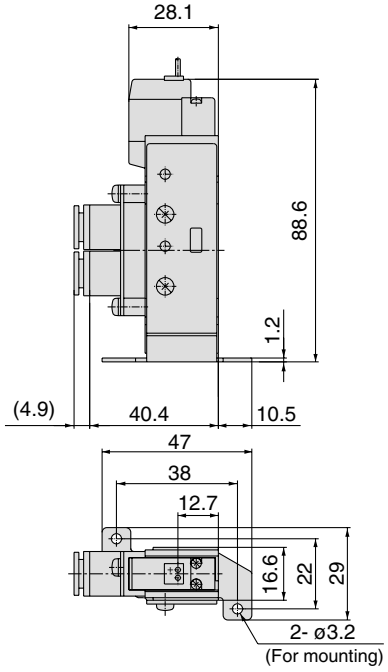

SY5120-□$^{G}_{H}$□□-01□(-F$^{1}_{2}$)-Q

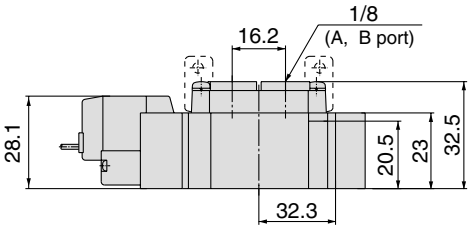

L plug connector: L

SY5120-□L□□-$^{C4, N3}_{C6, N7, C8, N9}$□(-F$^{1}_{2}$)-Q

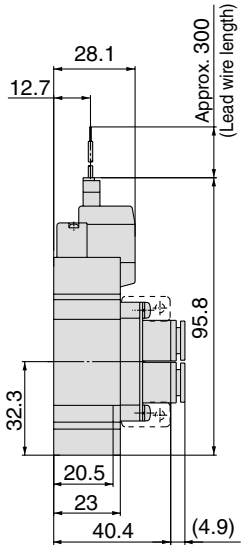

M plug connector: M

SY5120-□M□□-$^{C4, N3}_{C6, N7, C8, N9}$□(-F$^{1}_{2}$)-Q

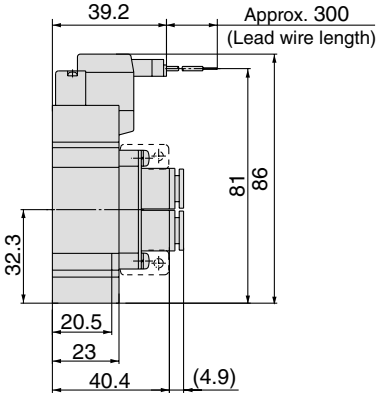

DIN terminal (D):

SY5120-□D□□-$^{C4, N3}_{C6, N7, C8, N9}$□(-F$^{1}_{2}$)-Q

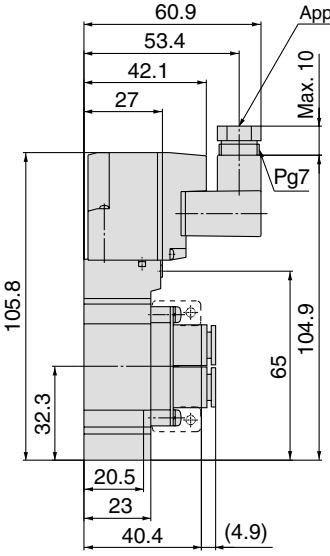

M8 connector (WO):

SY5120-□WO□□-$^{C4, N3}_{C6, N7, C8, N9}$□(-F$^{1}_{2}$)-Q

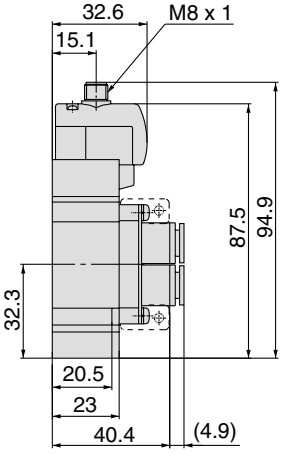

Note) Refer to back page 12 for dimensions of connector types.

Dimensions: Series SY5000

2 position double

Grommet (G), (H): SY5220-□ G/H □□-C4, N3 / C6, N7 / C8, N9 □(-F2)-Q

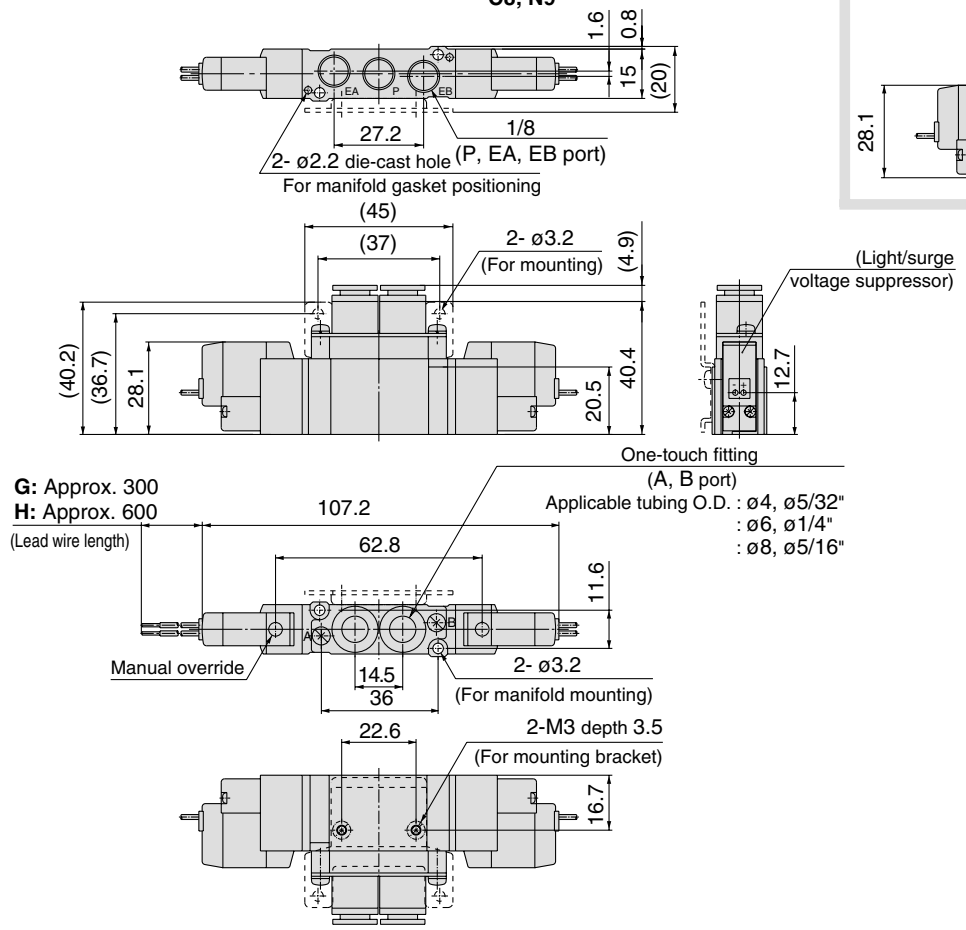

SY5220-□ G/H □□-01□(-F2)-Q

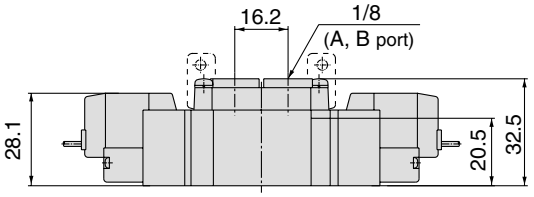

L plug connector (L): **SY5220-□L□□-C4, N3 / C6, N7 / C8, N9 □(-F2)-Q**

M plug connector (M): **SY5220-□M□□-C4, N3 / C6, N7 / C8, N9 □(-F2)-Q**

DIN terminal (D): **SY5220-□D□□-C4, N3 / C6, N7 / C8, N9 □(-F2)-Q**

M8 connector (WO): **SY5220-□WO□□-C4, N3 / C6, N7 / C8, N9 □(-F2)-Q**

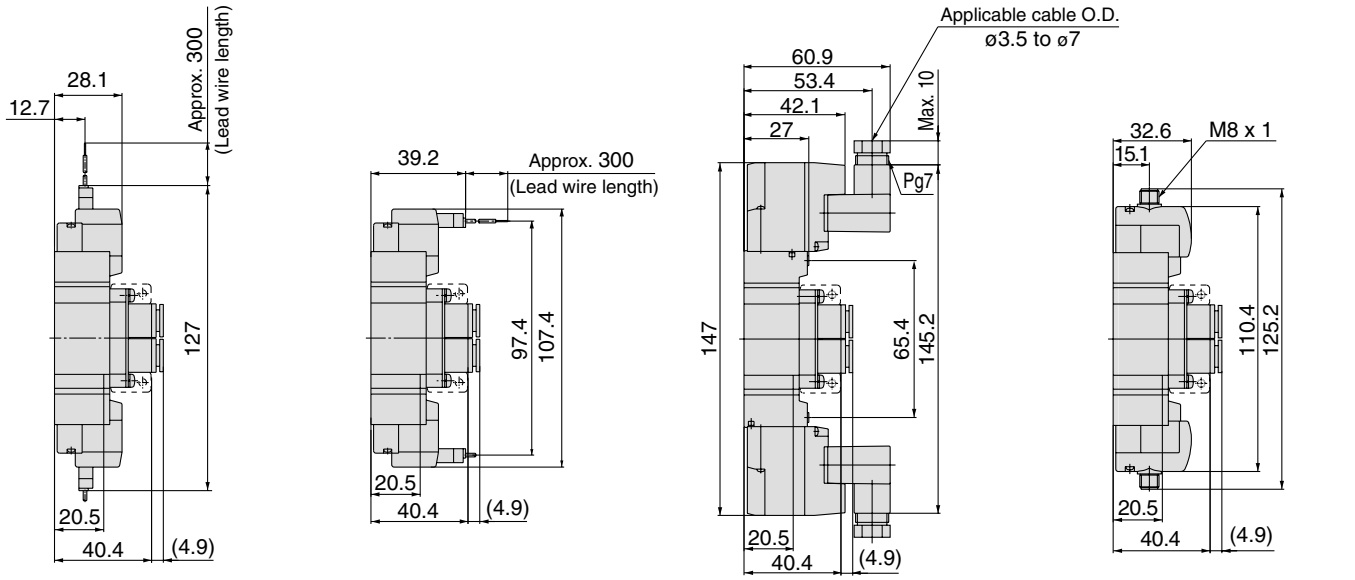

Note) Refer to back page 12 for dimensions of connector types.

Dimensions: Series SY5000

3 position closed center / exhaust center / pressure center

Grommet (G), (H): SY5$^{3}_{5}$4$^{G}_{H}$20-□□□-C4, N3, C6, N7, C8, N9□(-F2)-Q

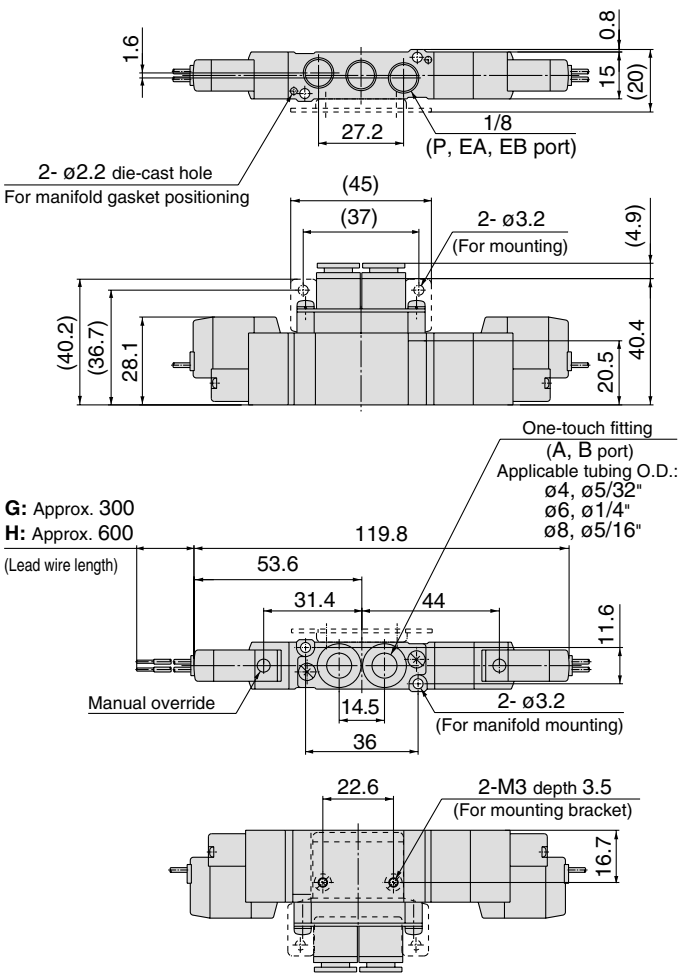

SY5$^{3}_{5}$4$^{3}_{4}$20-□□□-01□(-F2)-Q

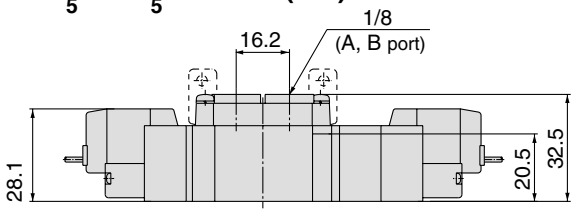

L plug connector (L):

SY5$^{3}_{5}$4$^{3}_{4}$20-□L□□-C4, N3, C6, N7, C8, N9□(-F2)-Q

M plug connector (M):

SY5$^{3}_{5}$4$^{3}_{4}$20-□M□□-C4, N3, C6, N7, C8, N9□(-F2)-Q

DIN terminal (D):

SY5$^{3}_{5}$4$^{3}_{4}$20-□D□□-C4, N3, C6, N7, C8, N9□(-F2)-Q

M8 connector (WO):

SY5$^{3}_{5}$4$^{3}_{4}$20-□WO□□-C4, N3, C6, N7, C8, N9□(-F2)-Q

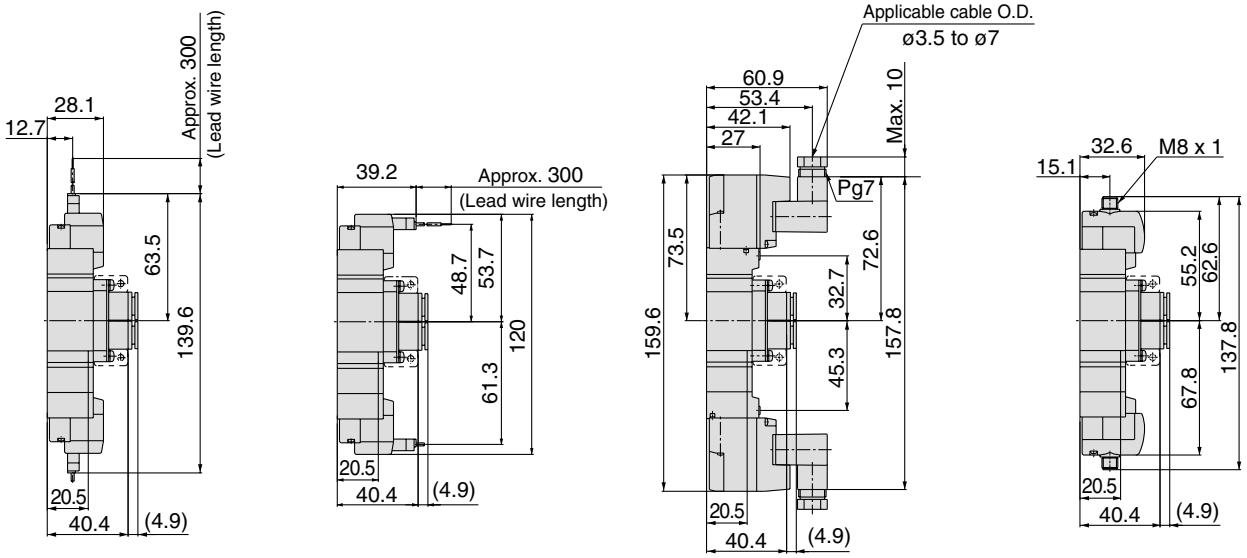

Note) Refer to back page 12 for dimensions of connector types.

Dimensions: Series SY7000

2 position single

Grommet (G), (H): SY7120-□$^{G}_{H}$□□- $^{C8, N9}_{C10, N11}$ □(-F2)-Q

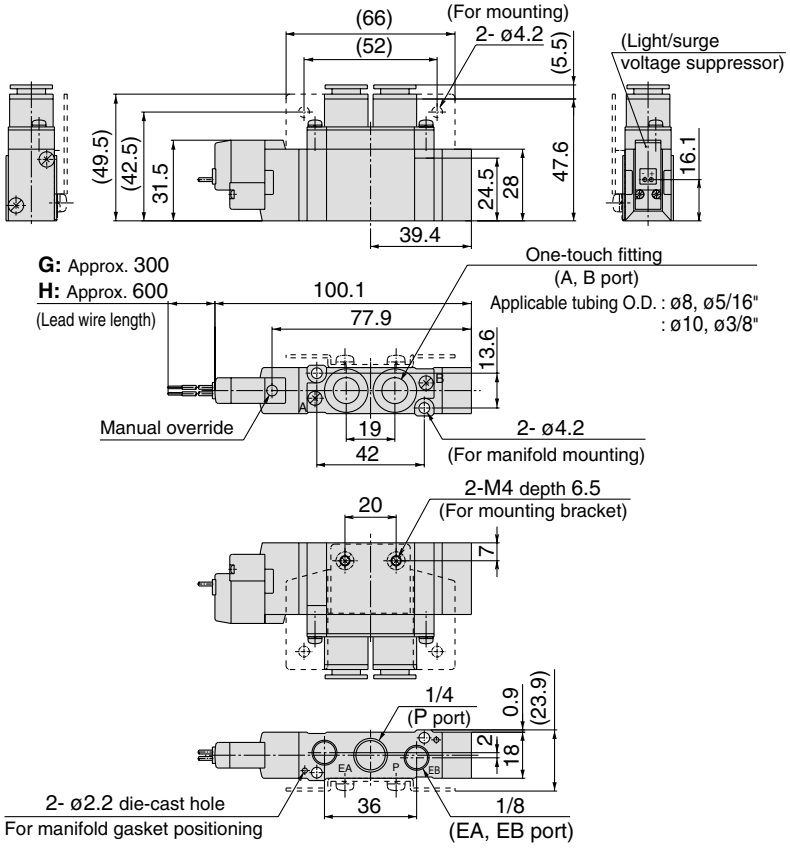

SY7120-□$^{G}_{H}$□- $^{C8, N9}_{C10, N11}$□-F1-Q

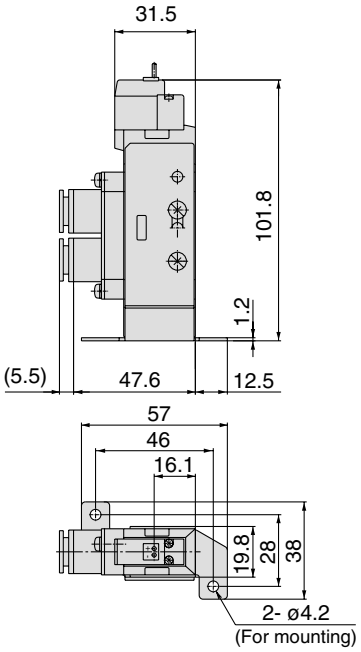

SY7120-□$^{G}_{H}$□□-02□(-F2)-Q

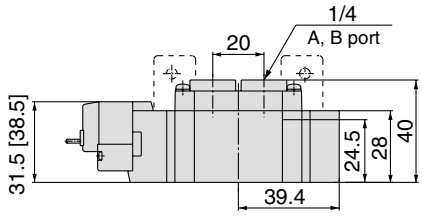

L plug connector (L):
SY7120-□L□□-$^{C8, N9}_{C10, N11}$□(-F$^{1}_{2}$)-Q

M plug connector (M):
SY7120-□M□□-$^{C8, N9}_{C10, N11}$□(-F$^{1}_{2}$)-Q

DIN terminal (D):
SY7120-□D□□-$^{C8, N9}_{C10, N11}$□(-F$^{1}_{2}$)-Q

M8 connector (WO):
SY7120-□WO□□-$^{C8, N9}_{C10, N11}$□(-F$^{1}_{2}$)-Q

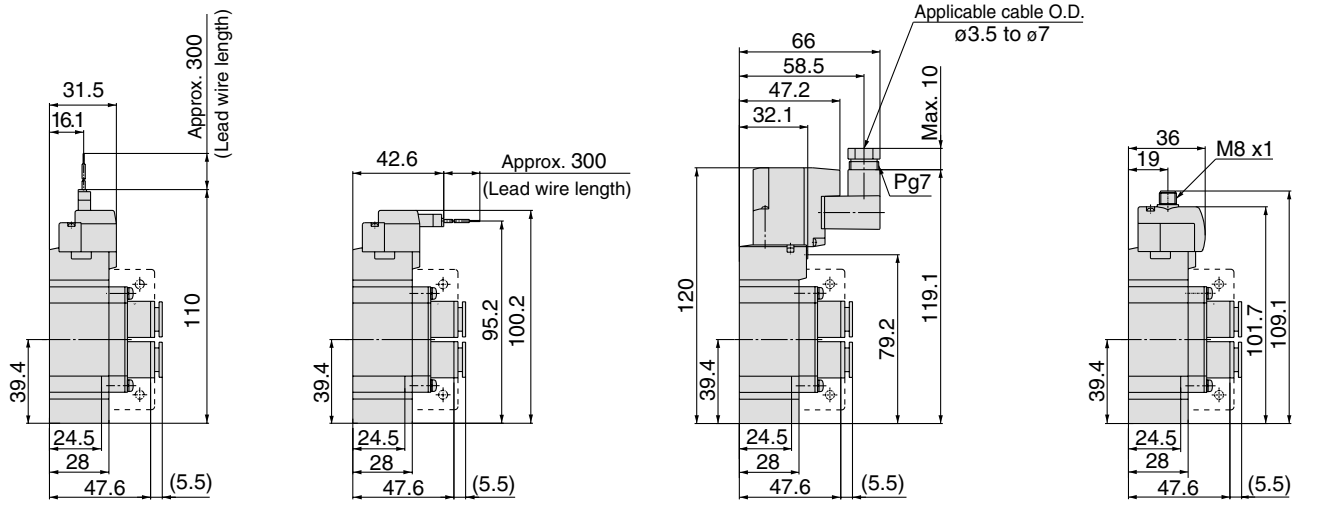

Note) Refer to back page 12 for dimensions of connector types.

Dimensions: Series SY7000

2 position double

Grommet (G), (H): SY7220-□$^{G}_{H}$□□-$^{C8, N9}_{C10, N11}$□(-F2)-Q

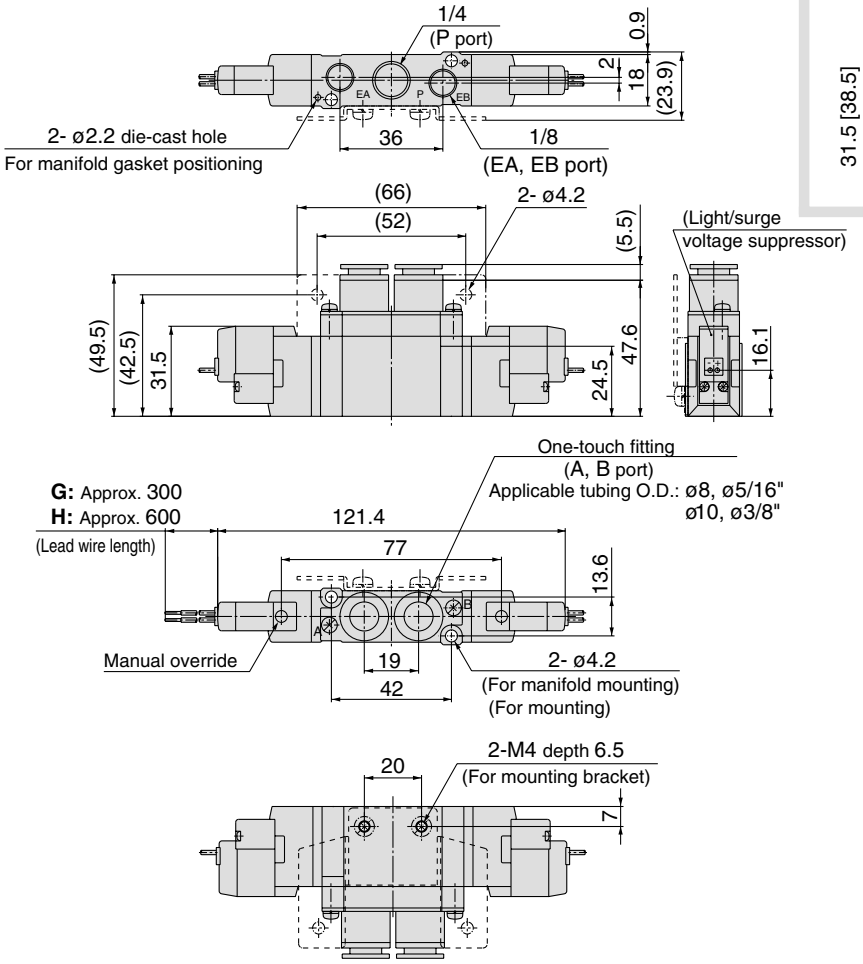

SY7220-□$^{G}_{H}$□□-02□(-F2)-Q

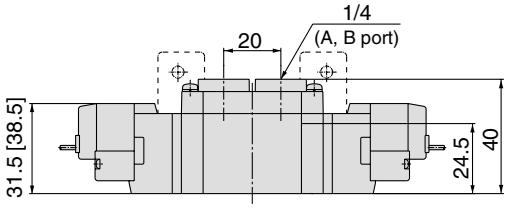

L plug connector (L):
SY7220-□L□□-$^{C8, N9}_{C10, N11}$□(-F2)-Q

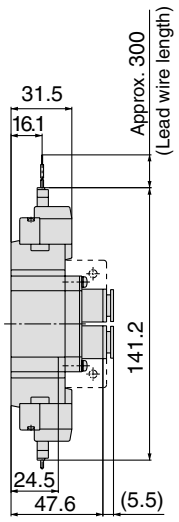

M plug connector (M):
SY7220-□M□□-$^{C8, N9}_{C10, N11}$□(-F2)-Q

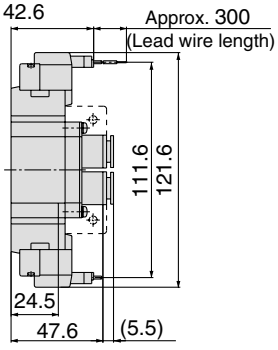

DIN terminal (D):
SY7220-□D□□-$^{C8, N9}_{C10, N11}$□(-F2)-Q

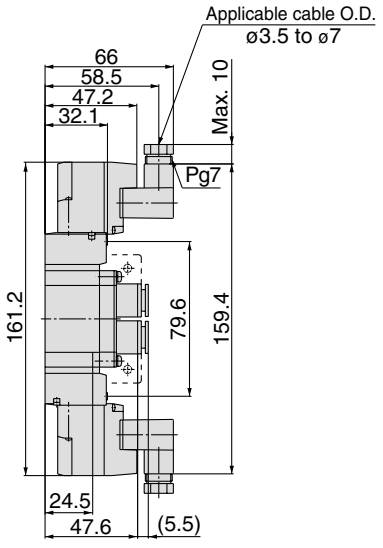

M8 connector (WO):
SY7220-□WO□□-$^{C8, N9}_{C10, N11}$□(-F2)-Q

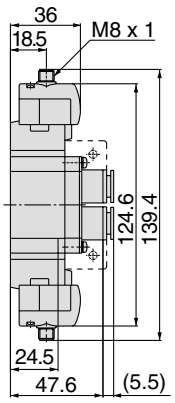

Note) Refer to back page 12 for dimensions of connector types.

Dimensions: Series SY7000

3 position closed center / exhaust center / pressure center

Grommet (G), (H): SY7$^{3}_{5}$20-□$^{G}_{H}$□□-$^{C8, N9}_{C10, N11}$□(-F2)-Q

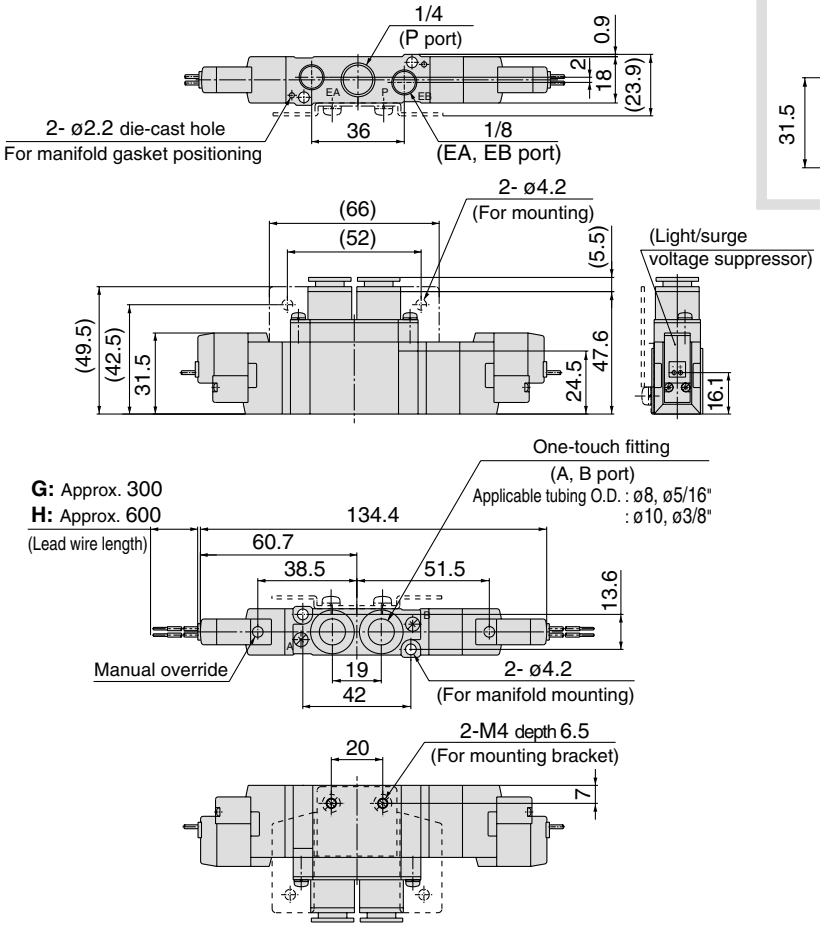

SY7$^{3}_{5}$20-□$^{G}_{H}$□□-02□(-F2)-Q

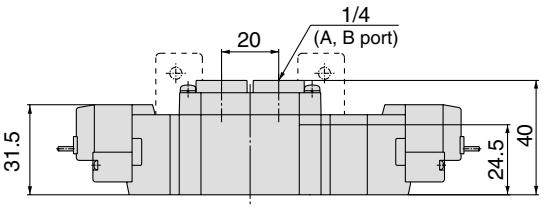

L plug connector (L): SY7$^{3}_{5}$20-□L□□-$^{C8, N9}_{C10, N11}$□(-F2)-Q

M plug connector (M): SY7$^{3}_{5}$20-□M□□-$^{C8, N9}_{C10, N11}$□(-F2)-Q

DIN terminal (D): SY7$^{3}_{5}$20-□D□□-$^{C8, N9}_{C10, N11}$□(-F2)-Q

M8 connector (WO): SY7$^{3}_{5}$20-□WO□□-$^{C8, N9}_{C10, N11}$□(-F2)-Q

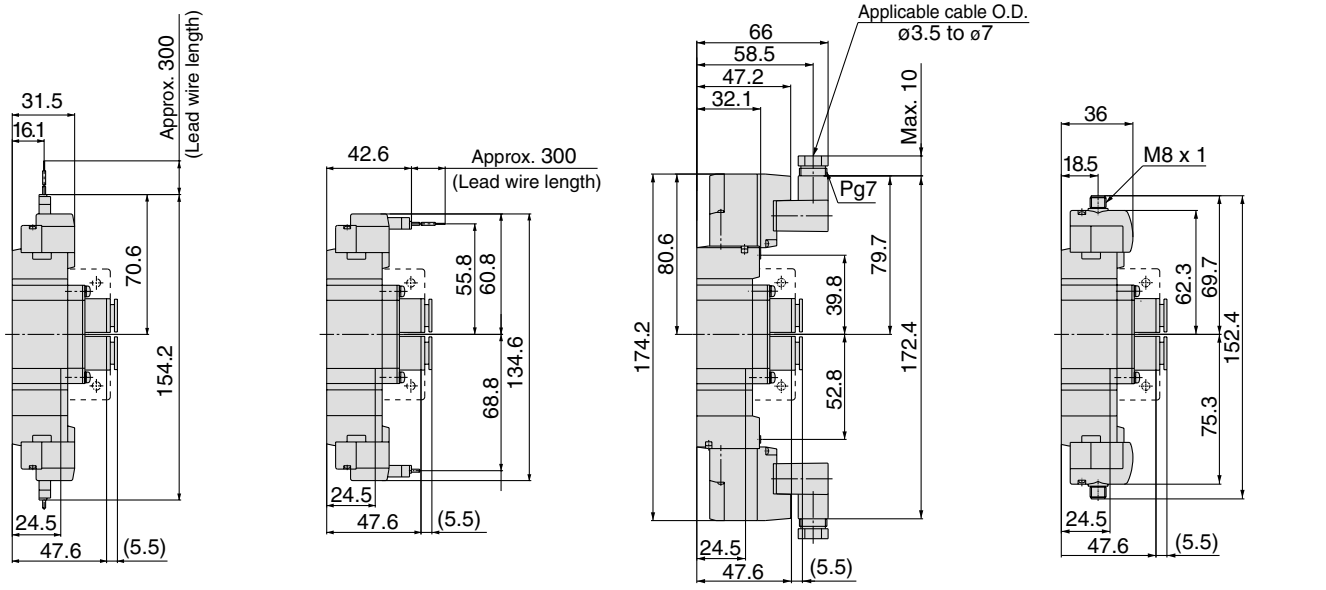

Note) Refer to back page 12 for dimensions of connector types.

Dimensions: Series SY9000

2 position single
Grommet (G), (H): SYJ9120-□$^{G}_{H}$□□-$^{C8, N9}_{C10, N11}$□-Q
C12

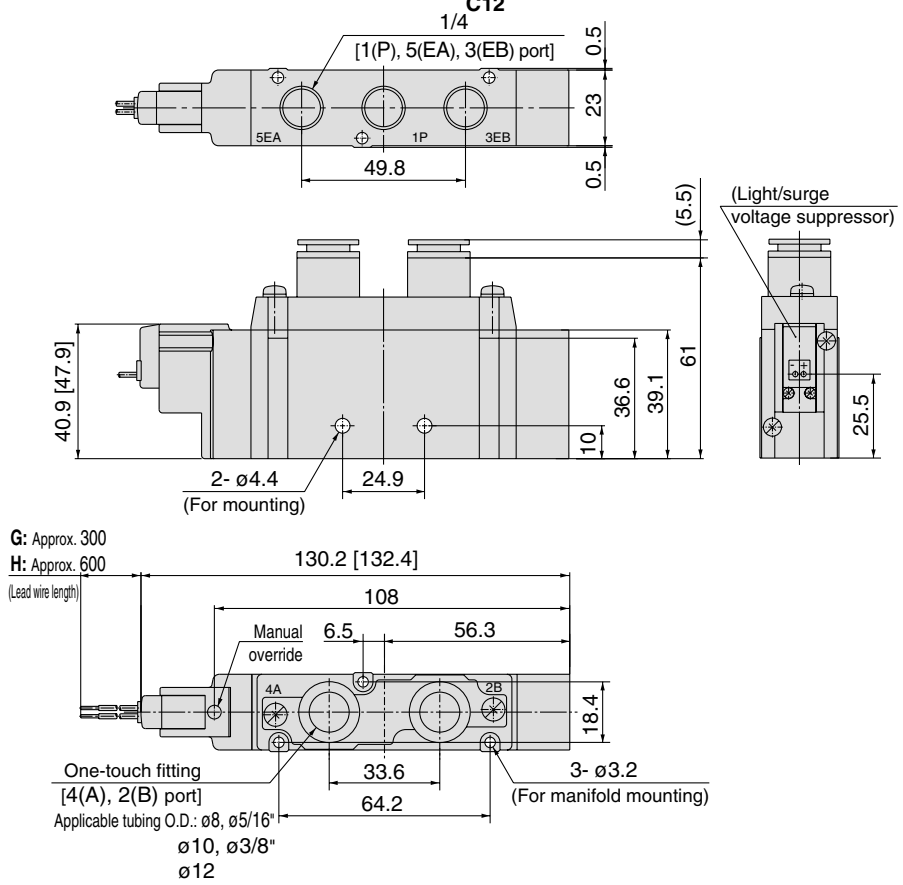

SY9120-□$^{G}_{H}$□□-$^{02}_{03}$□-Q

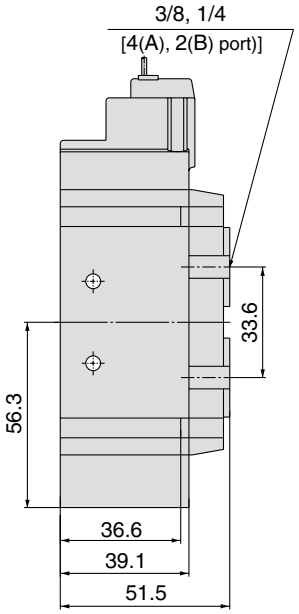

L plug connector (L):
SY9120-□L□□-$^{C8, N9}_{C10, N11}$□-Q
C12

M plug connector (M):
SY9120-□M□□-$^{C8, N9}_{C10, N11}$□-Q
C12

DIN terminal (D):
SY9120-□D□□-$^{C8, N9}_{C10, N11}$□-Q
C12

M8 connector (WO):
SY9120-□WO□□-$^{C8, N9}_{C10, N11}$□-Q
C12

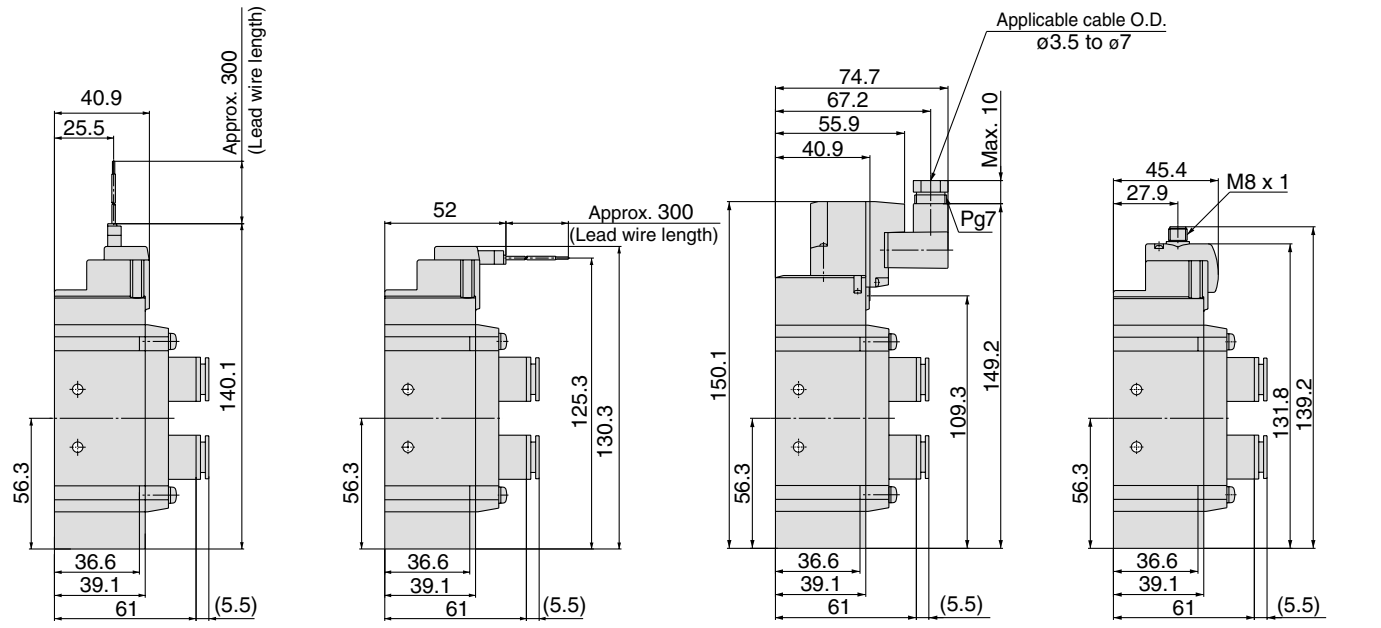

Note) Refer to back page 12 for dimensions of connector types.

Dimensions: Series SY9000

2 position double
Grommet (G), (H): SYJ9220-□$^{G}_{H}$□□-$^{C8, N9}_{C10, N11}$□-Q

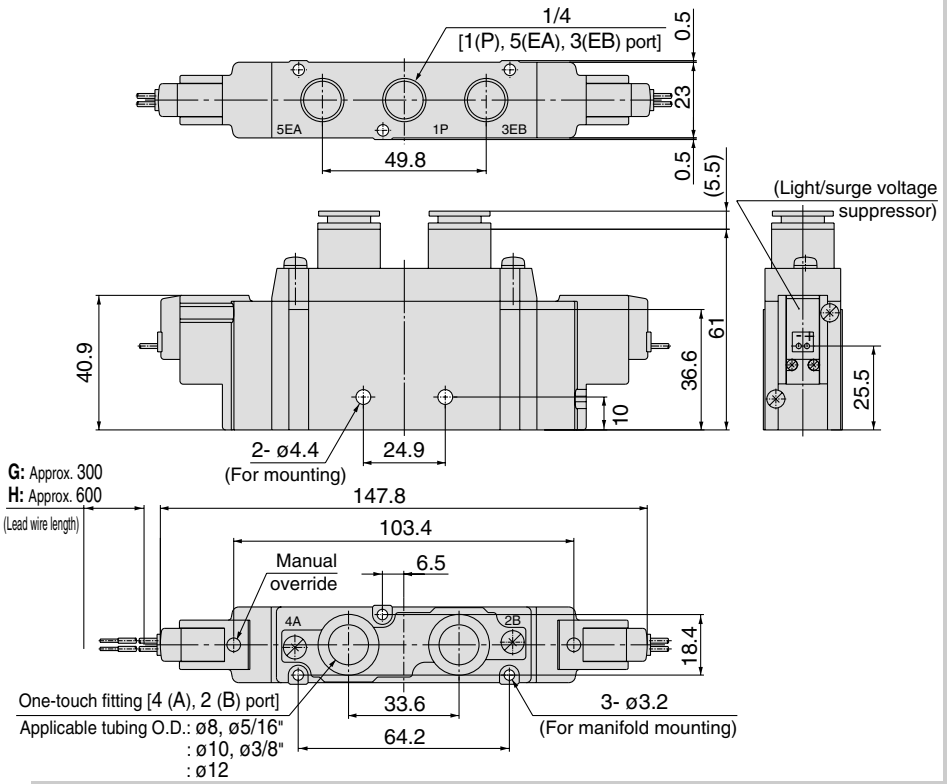

SY9220-□$^{G}_{H}$□□-$^{02}_{03}$□-Q

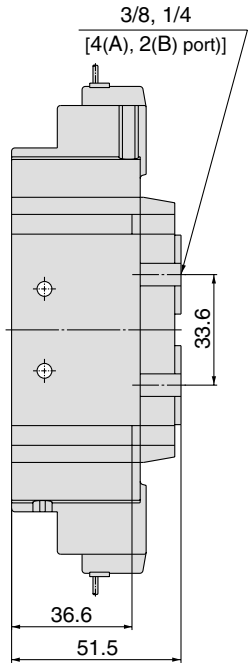

L plug connector (L):
SY9220-□L□□-$^{C8, N9}_{C10, N11}$□-Q

M plug connector (M):
SY9220-□M□□-$^{C8, N9}_{C10, N11}$□-Q

DIN terminal (D):
SY9220-□D□□-$^{C8, N9}_{C10, N11}$□-Q

M8 connector (WO):
SY9220-□WO□□-$^{C8, N9}_{C10, N11}$□-Q

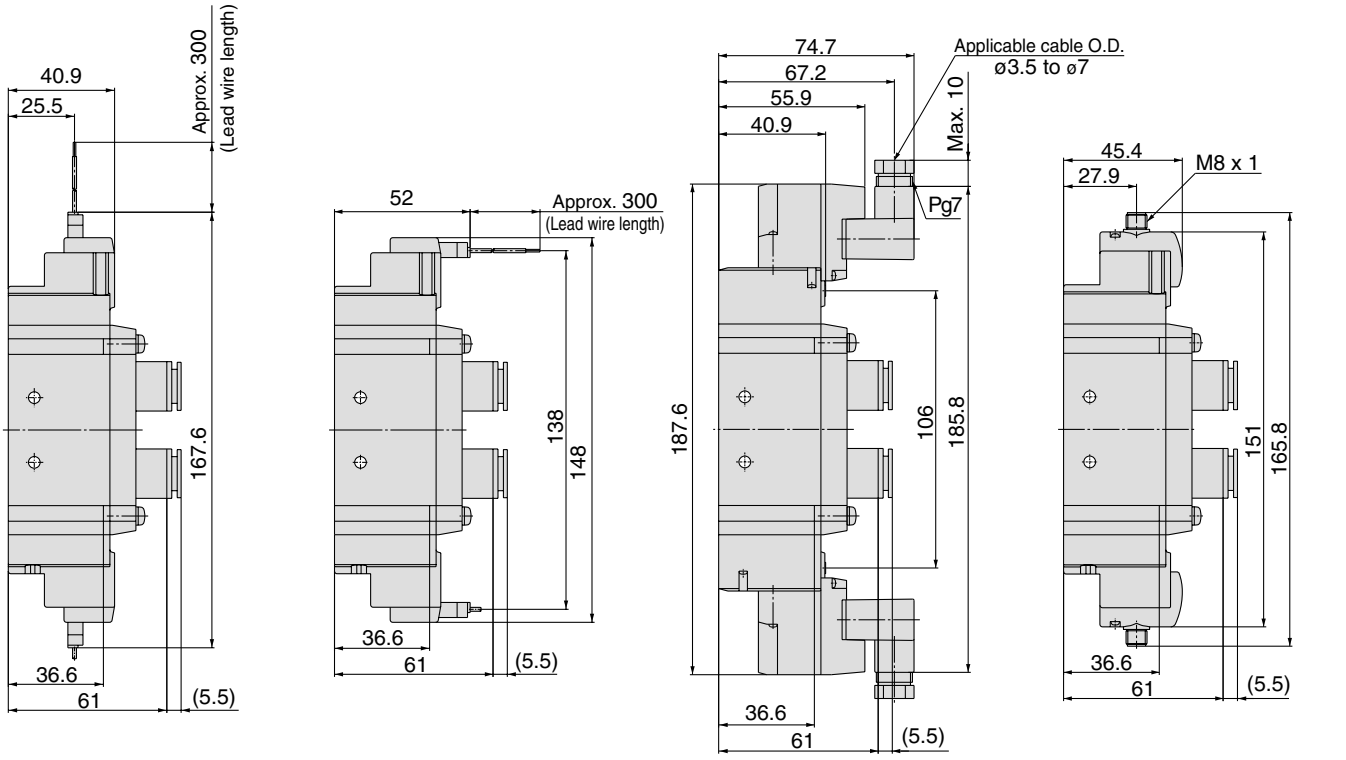

Note) Refer to back page 12 for dimensions of connector types.

Dimensions: Series SY9000

3 position closed center / exhaust center / pressure

Grommet (G), (H): SY9$^{3}_{5}$20-□$^{G}_{H}$□□-$^{C8, N9}_{C10, N11}$□-Q

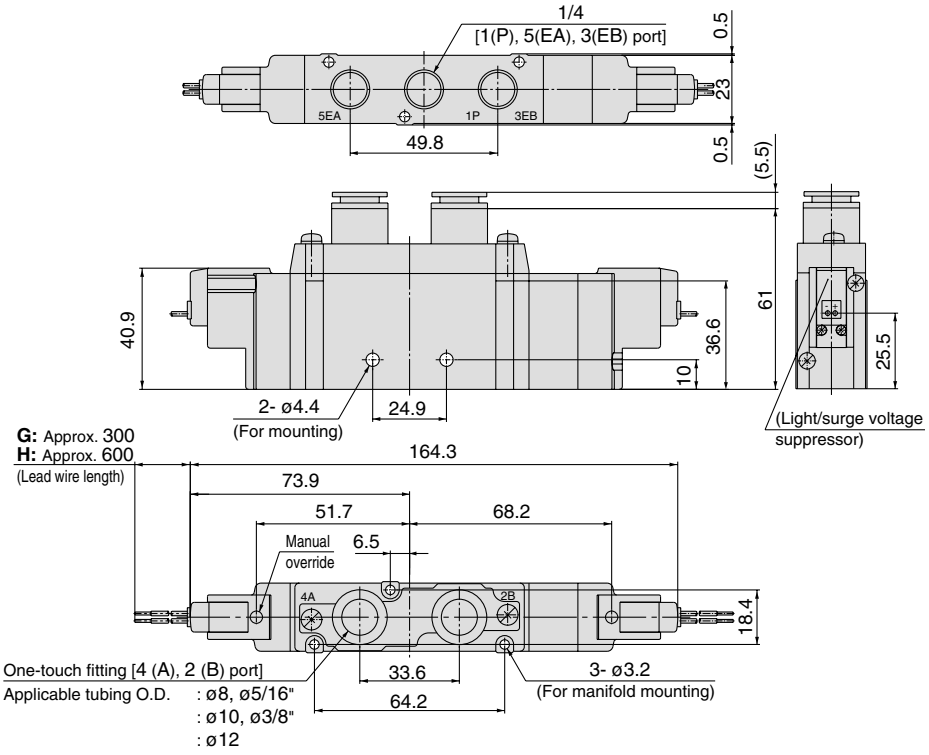

SY9$^{3}_{5}$20-□$^{G}_{H}$□□-$^{02}_{03}$□-Q

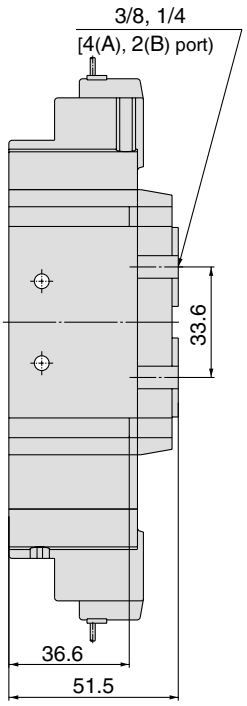

L plug connector (L):
SY9$^{3}_{5}$20-□L□□-$^{C8, N9}_{C10, N11}$□-Q

M plug connector (M):
SY9$^{3}_{5}$20-□M□□-$^{C8, N9}_{C10, N11}$□-Q

DIN terminal (D):
SY9$^{3}_{5}$20-□D□□-$^{C8, N9}_{C10, N11}$□-Q

M8 connector (WO):
SY9$^{3}_{5}$20-□WO□□-$^{C8, N9}_{C10, N11}$□-Q

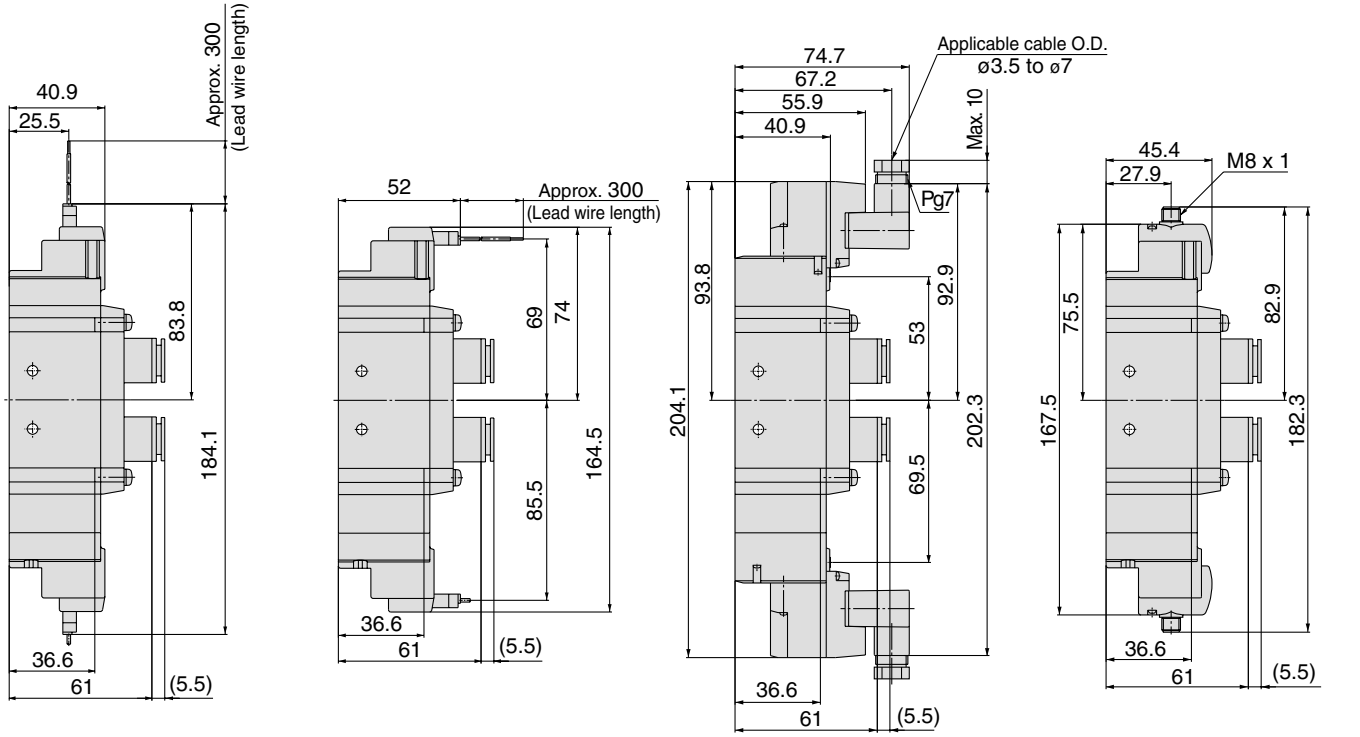

Note) Refer to back page 12 for dimensions of connector types.

5 Port Solenoid Valve
Series SY3000/5000/7000/9000
Base Mounted
Single Unit

CAD

Refer to www.smcworld.com for details of products compatible with overseas standards.

How to Order

SY 5 2 40 □ □ – 5 L □ □ – □ □ -Q

Series

3	SY3000
5	SY5000
7	SY7000
9	SY9000

Type of actuation

1	2 position single 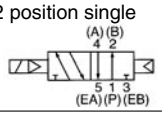
2	2 position double 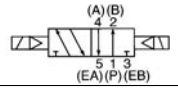
3	3 position closed center 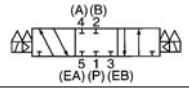
4	3 position exhaust center 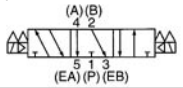
5	3 position pressure center 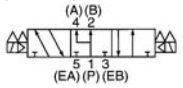

Pilot type

-	Internal pilot
R	External pilot

Coil specifications

-	Standard
T	With power saving circuit (24, 12 VDC only)

∗ Power saving circuit is not available in the case of D, DO or W□ type.

Rated voltage

For DC

5	24 VDC
6	12 VDC
V	6 VDC
S	5 VDC
R	3 VDC

For AC (50/60 Hz)

1	100 VAC
2	200 VAC
3	110 VAC [115 VAC]
4	220 VAC [230 VAC]

∗ DC specifications of type D and DO is only available with 12 and 24 VDC.
∗ AC specification is only available with D, DO type.

Port size

Symbol	Port size	Applicable series
-	Without sub-plate	
01	1/8 With sub-plate	SY3000
02	1/4 With sub-plate	SY5000 SY7000
03	3/8 With sub-plate	SY7000 SY9000
04	1/2 With sub-plate	SY9000

Thread type

-	Rc
F	G
N	NPT
T	NPTF

Manual override

-: Non-locking push type	D: Push-turn locking slotted type	E: Push-turn locking lever type
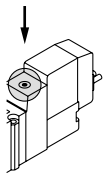	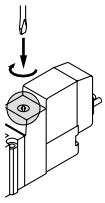	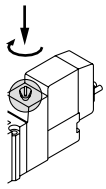

(Light/surge voltage suppressor)

Electrical entry for G, H, L, M, W

-	Without light/surge voltage suppressor
S	With surge voltage suppressor
Z	With light/surge voltage suppressor
R	With surge voltage suppressor (Non-polar type)
U	With light/surge voltage suppressor (Non-polar type)

∗ Power saving circuit is only available in the "Z" type.

Electrical entry for D (Except SY3000)

-	Without light/surge voltage suppressor
S	With surge voltage suppressor (Non-polar type)
Z	With light/surge voltage suppressor (Non-polar type)

∗ DOZ is not available.
∗ For AC voltage valves there is no "S" option. It is already built-in to the rectifier circuit.

Electrical entry

24, 12, 6, 5, 3 VDC				24, 12 VDC/ 100, 110, 200, 220 VAC	24, 12, 6, 5, 3 VDC
Grommet	L plug connector	M plug connector		DIN terminal	M8 connector ∗
G: Lead wire length 300 mm 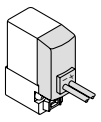	**L:** With lead wire (Length 300 mm) 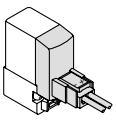	**M:** With lead wire (Length 300 mm) 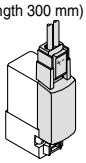	**MN:** Without lead wire 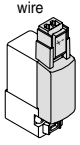	**(Except SY3000) D:** With connector 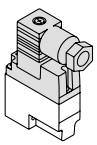	**WO:** Without connector cable 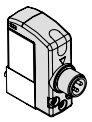
H: Lead wire length 600 mm 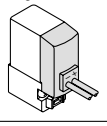	**LN:** Without lead wire 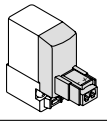	**LO:** Without connector 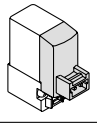	**MO:** Without connector 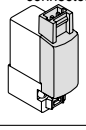	**DO:** Without connector 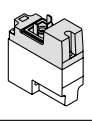	**W□:** With connector cable Note 1) 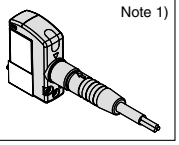

∗ LN, MN type: with 2 sockets.
∗ For DIN terminal of SY3000 series, refer to back page 10.
∗ DIN terminal type "Y" which conforms to EN-175301-803C (former DIN43650C) is also available. For details, refer to page 210.
∗ For connector cable of M8 connector, refer to back page 12.
∗ Connector M8 type "WA" conforming to IEC 60947-5-2 standard, is also available. For details, see page 211.
Note 1) Enter the cable length symbols in □. Please be sure to fill in the blank referring to back page 13.

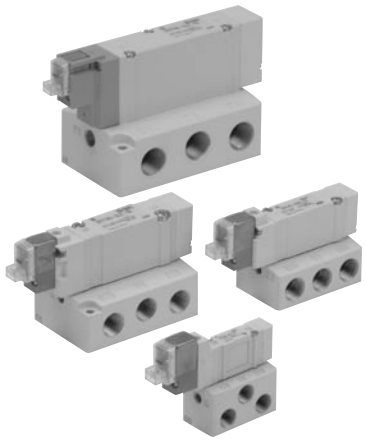

Made to Order **Made to Order**
(For details, refer to pages 199 through to 213.)

Specifications

Series			SY3000	SY5000	SY7000	SY9000
Fluid			Air			
Internal pilot Operating pressure range(MPa)	2 position single		0.15 to 0.7			
	2 position double		0.1 to 0.7			
	3 position		0.2 to 0.7			
External pilot Operating pressure range(MPa)	Operating pressure range		–100 kPa to 0.7			
	Pilot pressure range	2 position single	0.25 to 0.7			
		2 position double	0.25 to 0.7			
		3 position	0.25 to 0.7			
Ambient and fluid temperature (°C)			–10 to 50 (No freezing. Refer to back page 3.)			
Max. operating frequency (Hz)	2 Position single, Double		10	5	5	5
	3 position		3	3	3	3
Manual override (Manual operation)			Non-locking push type, Push-turn locking slotted type, Push-turn locking lever type			
Pilot exhaust method	Internal pilot		Common exhaust type for main and pilot valve			
	External pilot		Pilot valve individual exhaust			
Lubrication			Not required			
Mounting orientation			Unrestricted			
Impact/Vibration resistance (m/s²) Note)			150/30			
Enclosure			Dust proof (∗ DIN terminal and M8 connector: IP65)			

∗ Based on IEC60529)

Note) Impact resistance: No malfunction occurred when it is tested in the axial direction and at the right angles to the main valve and armature in both energised and de-energised states every once for each condition. (Values at the initial period)

Vibration resistance: No malfunction occurred in a one-sweep test between 45 and 2000 Hz. Test was performed at both energised and de-energised states in the axial direction and at the right angles to the main valve and armature. (Values at the initial period)

Response Time

Note) Based on dynamic performance test, JIS B 8375-1981. (Coil temperature: 20°C, at rated voltage)

SY3000

Type of actuation	Response time (ms) (at the pressure of 0.5 MPa)		
	Without light/surge voltage suppressor	With light/surge voltage suppressor	
		Type S, Z	Type R, U
2 position single	12 or less	15 or less	12 or less
2 position double	10 or less	13 or less	10 or less
3 position	15 or less	20 or less	16 or less

SY5000

Type of actuation	Response time (ms) (at the pressure of 0.5 MPa)		
	Without light/surge voltage suppressor	With light/surge voltage suppressor	
		Type S, Z	Type R, U
2 position single	19 or less	26 or less	19 or less
2 position double	18 or less	22 or less	18 or less
3 position	32 or less	38 or less	32 or less

SY7000

Type of actuation	Response time (ms) (at the pressure of 0.5 MPa)		
	Without light/surge voltage suppressor	With light/surge voltage suppressor	
		Type S, Z	Type R, U
2 position single	31 or less	38 or less	33 or less
2 position double	27 or less	30 or less	28 or less
3 position	50 or less	56 or less	50 or less

SY9000

Type of actuation	Response time (ms) (at the pressure of 0.5 MPa)		
	Without light/surge voltage suppressor	With light/surge voltage suppressor	
		Type S, Z	Type R, U
2 position single	35 or less	41 or less	35 or less
2 position double	35 or less	41 or less	35 or less
3 position	62 or less	64 or less	62 or less

Solenoid Specifications

Electrical entry			Grommet (G), (H) L plug connector (L) M plug connector (M)	DIN terminal (D) M8 connector (W)
			G, H, L, M, W	D
Coil rated voltage (V)	DC		24, 12, 6, 5, 3	24, 12
	AC 50/60 Hz		100, 110	200, 220
Allowable voltage fluctuation (%)			±10% of rated voltage ∗	
Power consumption (W)	DC	Standard	0.35 (With indicator light: 0.4 DIN terminal with indicator light: 0.45)	
		With power saving circuit	0.1 (With indicator light only)	
Apparent power (VA) ∗	AC	100 V	-	0.78 (With indicator light: 0.87)
		110 V [115 V]	- -	0.86 (With indicator light: 0.97) [0.94 (With indicator light: 1.07)]
		200 V	-	1.15 (With indicator light: 1.30)
		220 V [230 V]	- -	1.27 (With indicator light: 1.46) [1.39 (With indicator light: 1.60)]
Surge voltage suppressor			Diode (Varistor is for DIN terminal and Non-polar type.)	
Indicator light			LED (AC of DIN connector is neon light.)	

∗ In common between 110 VAC and 115 VAC, and between 220 VAC and 230 VAC.

∗ For 115 VAC and 230 VAC, the allowable voltage is –15% to +5% of rated voltage.

∗ S, Z and T type (with power saving circuit) should be used within the following allowable voltage fluctuation range due to a voltage drop caused by the internal circuit.

S and Z type: 24 VDC: –7% to +10%
12 VDC: –4% to +10%

T type: 24 VDC: –8% to +10%
12 VDC: –6% to +10%

Flow Characteristics/Weight

Series SY3000

Valve model	Type of actuation		Port size	Flow characteristics Note 1) 1 → 4/2 (P → A/B) C (dm³/(s·bar))	b	Cv	Q[ℓ/min(ANR)]	4/2 → 5/3 (A/B → EA/EB) C (dm³/(s·bar))	b	Cv	Q[ℓ/min(ANR)]	Weight (g) Note 2) Grommet	L plug connector, M plug connector	W M8 connector
SY3□40-□-01	2 position	Single	1/8	1.0	0.30	0.24	254	1.1	0.30	0.26	280	84 [50]	85 [53]	89 [57]
		Double										102 [68]	107 [73]	115 [81]
	3 position	Closed center		0.77	0.28	0.18	193	0.85	0.30	0.19	216	104 [69]	109 [74]	117 [82]
		Exhaust center		0.73	0.31	0.18	187	1.1 (0.55)	0.26 (0.52)	0.24 (0.16)	273 (164)			
		Pressure center		1.2 (0.51)	0.24 (0.45)	0.29 (0.14)	294 (144)	0.89	0.47	0.24	255			

Note 1) [ ]: denotes the normal position. Note 2) [ ]: denotes without sub-plate.
* These values have been calculated according to ISO6358 and represent the flow rate measured in standard conditions at an upstream pressure of 0.6 MPa (relative pressure) and a differential pressure of 0.1MPa.

Series SY5000

Valve model	Type of actuation		Port size	Flow characteristics Note 1) 1 → 4/2 (P → A/B) C (dm³/(s·bar))	b	Cv	Q[ℓ/min(ANR)]	4/2 → 5/3 (A/B → EA/EB) C (dm³/(s·bar))	b	Cv	Q[ℓ/min(ANR)]	Weight (g) Note 2) Grommet	L plug connector, M plug connector	DIN terminal	W M8 connector
SY5□40-□-02	2 position	Single	1/4	2.4	0.41	0.64	658	2.8	0.29	0.66	707	121 [58]	123 [61]	154 [92]	127 [65]
		Double										139 [76]	144 [81]	186 [123]	152 [89]
	3 position	Closed center		1.8	0.47	0.50	516	1.8	0.40	0.47	490	144 [82]	150 [87]	192 [129]	158 [95]
		Exhaust center		1.4	0.55	0.44	430	3.0 (1.2)	0.33 (0.48)	0.72 (0.37)	778 (347)				
		Pressure center		3.3 (0.84)	0.36 (0.60)	0.85 (0.28)	873 (270)	1.8	0.40	0.48	490				

Note 1) [ ]: denotes the normal position. Note 2) [ ]: denotes without sub-plate.
* These values have been calculated according to ISO6358 and represent the flow rate measured in standard conditions at an upstream pressure of 0.6 MPa (relative pressure) and a differential pressure of 0.1MPa.

Series SY7000

Valve model	Type of actuation		Port size	Flow characteristics Note 1) 1 → 4/2 (P → A/B) C (dm³/(s·bar))	b	Cv	Q[ℓ/min(ANR)]	4/2 → 5/3 (A/B → EA/EB) C (dm³/(s·bar))	b	Cv	Q[ℓ/min(ANR)]	Weight (g) Note 2) Grommet	L plug connector, M plug connector	DIN terminal	W M8 connector
SY7□40-□-02	2 position	Single	1/4	4.1	0.41	1.1	1123	4.1	0.29	1.0	1036	218 [89]	221 [92]	242 [113]	225 [96]
		Double										237 [108]	242 [113]	284 [155]	250 [121]
	3 position	Closed center		3.0	0.43	0.80	834	2.6	0.41	0.72	712	239 [110]	245 [116]	287 [158]	253 [124]
		Exhaust center		2.6	0.42	0.71	718	4.7 (1.7)	0.35 (0.48)	1.1 (0.49)	1235 (492)				
		Pressure center		5.3 (2.3)	0.39 (0.49)	1.3 (0.65)	1431 (670)	2.2	0.49	0.63	641				
SY7□40-□-03	2 position	Single	3/8	4.9	0.29	1.2	1238	4.5	0.27	1.1	1123	218 [89]	221 [92]	242 [113]	225 [96]
		Double										237 [108]	242 [113]	284 [155]	250 [121]
	3 position	Closed center		3.0	0.40	0.80	816	2.6	0.45	0.73	734	239 [110]	245 [116]	287 [158]	253 [124]
		Exhaust center		2.6	0.42	0.71	718	4.8 (1.7)	0.35 (0.48)	1.1 (0.49)	1261 (492)				
		Pressure center		5.3 (2.3)	0.31 (0.51)	1.3 (0.64)	1356 (682)	2.3	0.45	0.66	649				

Note 1) [ ]: denotes the normal position. Note 2) [ ]: denotes without sub-plate.
* These values have been calculated according to ISO6358 and represent the flow rate measured in standard conditions at an upstream pressure of 0.6 MPa (relative pressure) and a differential pressure of 0.1MPa.

Series SY9000

Valve model	Type of actuation		Port size	Flow characteristics Note1) 1 → 4/2 (P → A/B) C (dm³/(s·bar))	b	Cv	Q[ℓ/min(ANR)]	4/2 → 5/3 (A/B → EA/EB) C (dm³/(s·bar))	b	Cv	Q[ℓ/min(ANR)]	Weight (g) Note 2) Grommet	L plug connector, M plug connector	DIN terminal	W M8 connector
SY9□40-□-03	2 position	Single	3/8	7.9	0.34	2.0	2062	9.6	0.43	2.6	2670	469[172]	472[175]	493[196]	476[179]
		Double										488[191]	494[197]	535[239]	502[205]
	3 position	Closed center		7.5	0.33	1.8	1944	7.3	0.30	1.7	1856	512[215]	518[221]	560[263]	526[229]
		Exhaust center		7.2	0.34	1.7	1879	13 (4.0)	0.23 (0.41)	2.8 (0.95)	3168 (1096)				
		Pressure center		12 (3.3)	0.26 (0.41)	2.8 (0.84)	2977 (904)	6.7	0.40	1.9	1823				
SY9□40-□-04	2 position	Single	1/2	8.0	0.48	2.2	2313	10	0.29	2.5	2527	448 [172]	453 [175]	472	457[179]
		Double										467 [191]	473 [197]	515	481[205]
	3 position	Closed center		7.6	0.32	1.8	1957	7.3	0.32	1.8	1880	491 [215]	497 [221]	539	505[229]
		Exhaust center		7.3	0.42	2.0	2015	13 (4.7)	0.32 (0.54)	3.6 (1.5)	3348 (1430)				
		Pressure center		12 (3.3)	0.33 (0.51)	3.3 (0.94)	3111 (978)	7.4	0.33	1.9	1918				

Note 1) [ ]: denotes the normal position. Note 2) [ ]: denotes without sub-plate.
* These values have been calculated according to ISO6358 and represent the flow rate measured in standard conditions at an upstream pressure of 0.6 MPa (relative pressure) and a differential pressure of 0.1MPa.

Construction

Series SY

JIS Symbol
2 position single

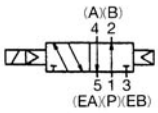

2 position single

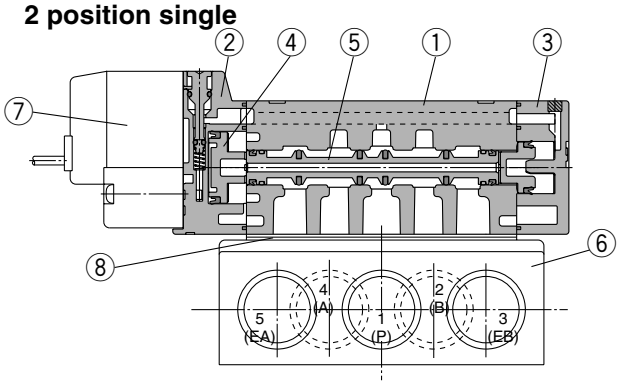

JIS Symbol
2 position double

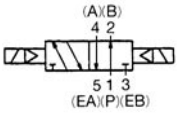

2 position double

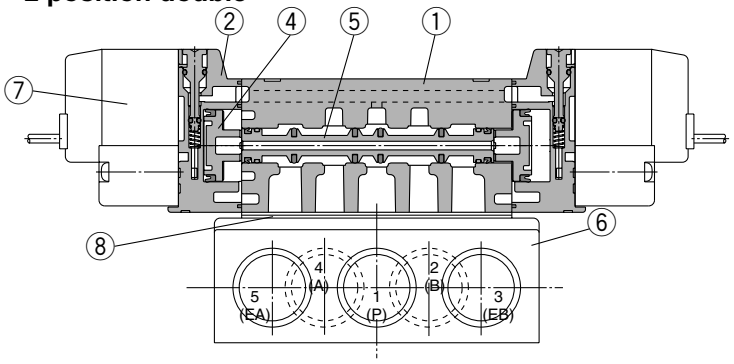

JIS Symbol
3 position closed center

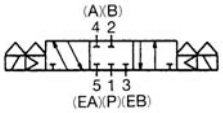

3 position exhaust center

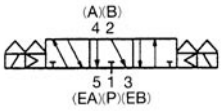

3 position pressure center



3 position closed center / exhaust center / pressure center

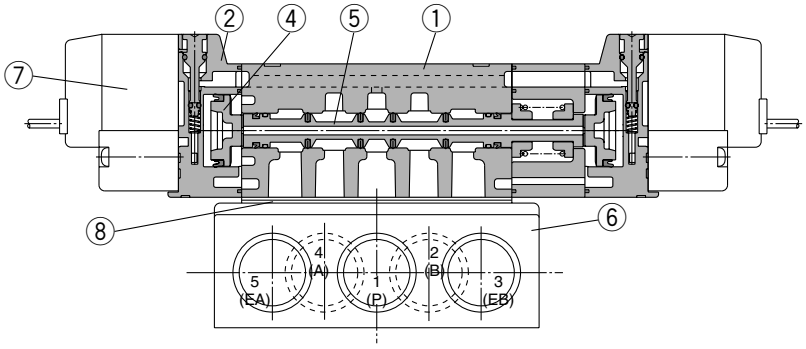

(This figure shows a closed center type.)

Component Parts

No.	Description	Material	Note
1	Body	Aluminum die-casted (SY3000: Zinc die-casted)	White
2	Adapter plate	Resin	White (SY9000: Gray)
3	End plate	Resin	White
4	Piston	Resin	–
5	Spool valve assembly	Aluminum, HNBR	–

Replacement Parts

No.	Description	Part No.				Note
		SY3□40	**SY5□40**	**SY7□40**	**SY9□40**	
6	Sub-plate	SY3000-27-1✻-Q	SY5000-27-1✻-Q	1/4: SY7000-27-1 ✻-Q 3/8: SY7000-27-2 ✻-Q	3/8: SY9000-27-1 ✻-Q 1/2: SY9000-27-2 ✻-Q	Aluminum die-casted
7	Pilot valve assembly	Refer to “How to Order Pilot Valve Assembly” on page 23.				
8	Gasket	SY3000-11-25	SY5000-11-15	SY7000-11-11	SY9000-11-2	H-NBR
–	Round head combination screw	SY3000-23-4 (M2 x 21)	M3 x 26	M4 x 31	SY9000-18-2 (M3 x 42)	For valve mounting (Matt nickel plated)

✻ Thread type

⚠ Caution

Mounting screw tightening torques

M2: 0.16 N·m
M3: 0.8 N·m
M4: 1.4 N·m

How to Order Pilot Valve Assembly

V111 □ — 5 G □

Coil specifications

-	Standard
T	With power saving circuit (24 VDC, 12 VDC only)

∗ Power saving circuit is not available in the case of D, DO or W□ type.

Rated voltage

5	24 VDC
6	12 VDC
V	6 VDC
S	5 VDC
R	3 VDC

Light/surge voltage suppressor

-	Without light/surge voltage suppressor
S	With surge voltage suppressor
Z	With light/surge voltage suppressor
R	With surge voltage suppressor (Non-polar type)
U	With light/surge voltage suppressor (Non-polar type)

∗ Power saving circuit is only available in the "Z" type.

Electrical entry

G	Grommet, 300 mm lead wire	
H	Grommet, 600 mm lead wire	
L	L plug connector	With lead wire
LN		Without lead wire
LO		Without connector
M	M plug connector	With lead wire
MN		Without lead wire
MO		Without connector
WO	M8 connector	Without connector cable
W□		With connector cable Note 1)

∗ For connector cable of M8 connector, refer to back page 12.

Note 1) Enter the cable length symbols in □. Please be sure to fill in the blank referring to back page 13.

■ DIN terminal type

V115 — 5 D □

Rated voltage

5	24 VDC
6	12 VDC
1	100 VAC 50/60 Hz
2	200 VAC 50/60 Hz
3	110 VAC 50/60 Hz [115 VAC 50/60 Hz]
4	220 VAC 50/60 Hz [230 VAC 50/60 Hz]

∗ DC specifications of type D and DO is only available with 12 and 24 VDC.

Light/surge voltage suppressor

-	Without light/surge voltage suppressor
S	With surge voltage suppressor (Non-polar type)
Z	With light/surge voltage suppressor (Non-polar type)

∗ DOZ is not available.
∗ For AC voltage valves there is no "S" option. It is already built-in to the rectifier circuit.

Electrical entry

D	DIN terminal	With connector
DO		Without connector

Note) Do not replace V111 (G, H, L, M) to V115 (DIN terminal) and vice versa when replacing pilot valve assembly only.

How to Order Connector Assembly for L/M Plug Connector

For DC: SY100 − 30 − 4A − □

Without lead wire: SY100 − 30 − A

Only connector and sockets (x 2 pcs.)

Lead wire length

-	300 mm
6	600 mm
10	1000 mm
15	1500 mm
20	2000 mm
25	2500 mm
30	3000 mm
50	5000 mm

How to Order M8 Connector Cable

■ Straight type

V100 − 49 − 1 − □

Cable length

1	300 mm
2	500 mm
3	1000 mm
4	2000 mm
7	5000 mm

How to Order Interface Regulator

Series SY3000

ARBY3000—05—P—2

Pressure gauge connection port

05	Pressure gauge (G15-10-01)
M1	Plug (M-5P)

Regulating port

P	P port
A1	A port (P controlled type, A port regulation)
B1	B port (P controlled type, B port regulation)

ARBY3000-05-□-2

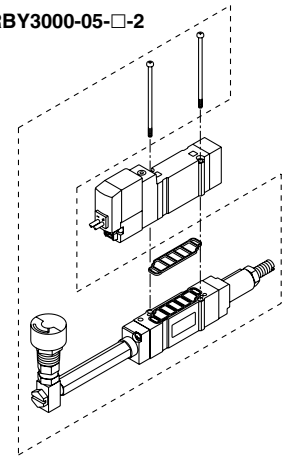

ARBY3000-M1-□-2

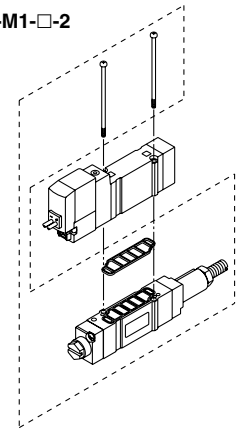

Series SY5000

ARBY5000—00—P—2

Pressure gauge connection port

00	Pressure gauge (G15-10-01)
M1	Plug (M-5P)

Regulating port

P	P port
A1	A port (P controlled type, A port regulation)
B1	B port (P controlled type, B port regulation)

ARBY5000-00-□-2

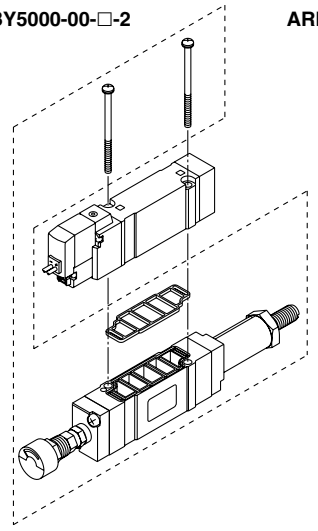

ARBY5000-M1-□-2

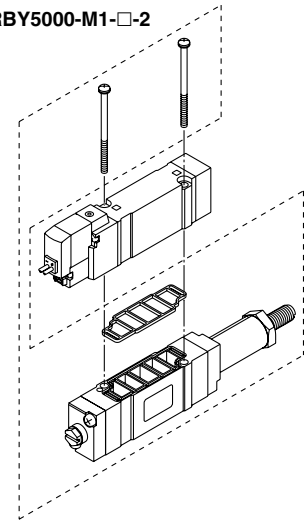

Series SY7000

ARBY7000—00—P—2

Pressure gauge connection port

00	Pressure gauge (G15-10-01)
M1	Plug (M-5P)

Regulating port

P	P port
A1	A port (P controlled type, A port regulation)
B1	B port (P controlled type, B port regulation)

ARBY7000-00-□-2

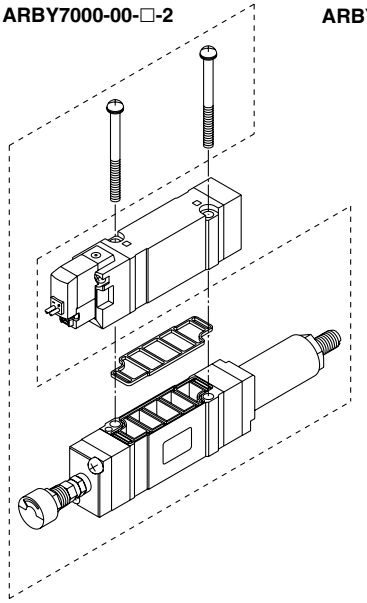

ARBY7000-M1-□-2

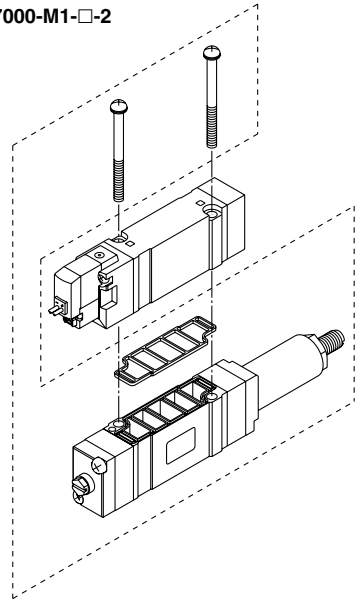

Accessory

Series	Round head combination screw	Gasket
ARBY3000	SY3000-23-10 (M2 x 36)	SX3000-57-4
ARBY5000	M3 x 48.5, Matt nickel plated	SX5000-57-6
ARBY7000	M4 x 57, Matt nickel plated	SX7000-57-4

⚠ Caution

Mounting screw tightening torques

M2: 0.16 N·m
M3: 0.8 N·m
M4: 1.4 N·m

Dimensions: Series SY3000

2 position single

Grommet (G), (H): SY3140(R)-□$^{G}_{H}$□□-01□-Q

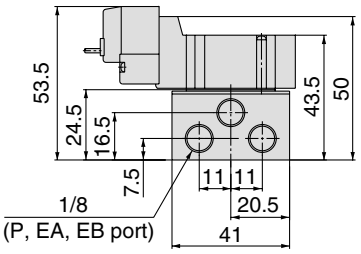

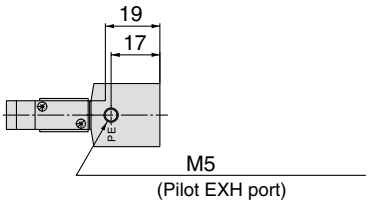

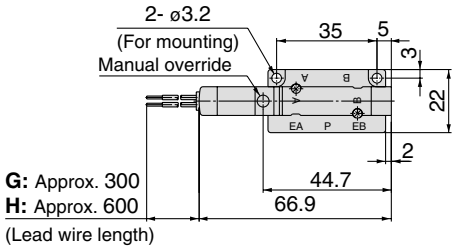

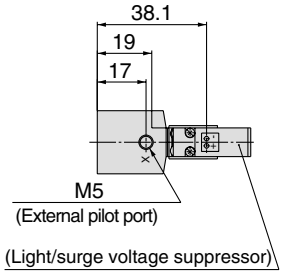

With interface regulator

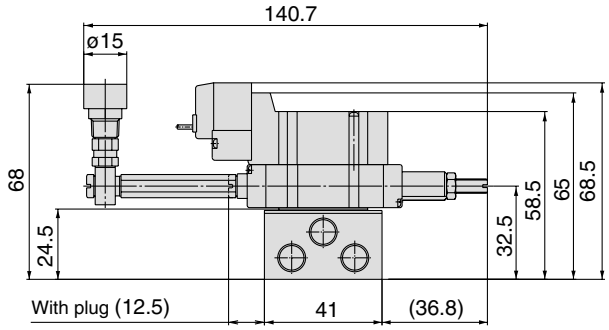

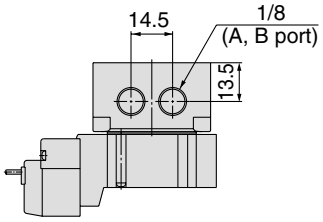

L plug connector (L):
SY3140(R)-□L□□-01□-Q

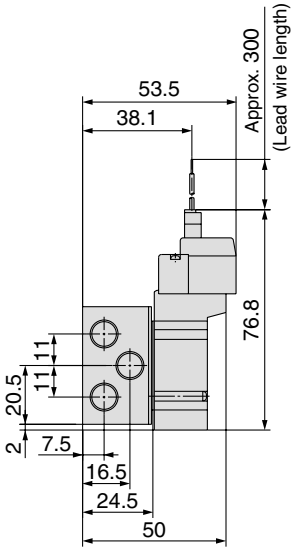

M plug connector (M):
SY3140(R)-□M□□-01□-Q

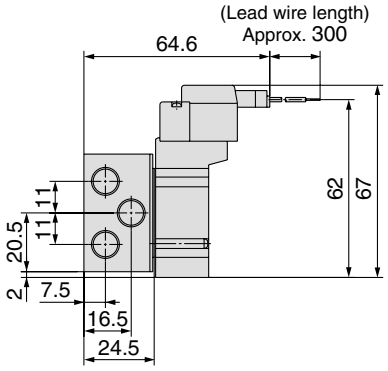

M8 connector (WO):
SY3140(R)-□WO□□-01□-Q

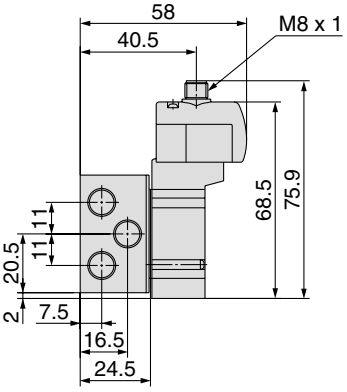

Note) Refer to back page 12 for dimensions of connector types.

Dimensions: Series SY3000

2 position double

Grommet (G), (H): SY3240(R)-□$^{G}_{H}$□□-01□-Q

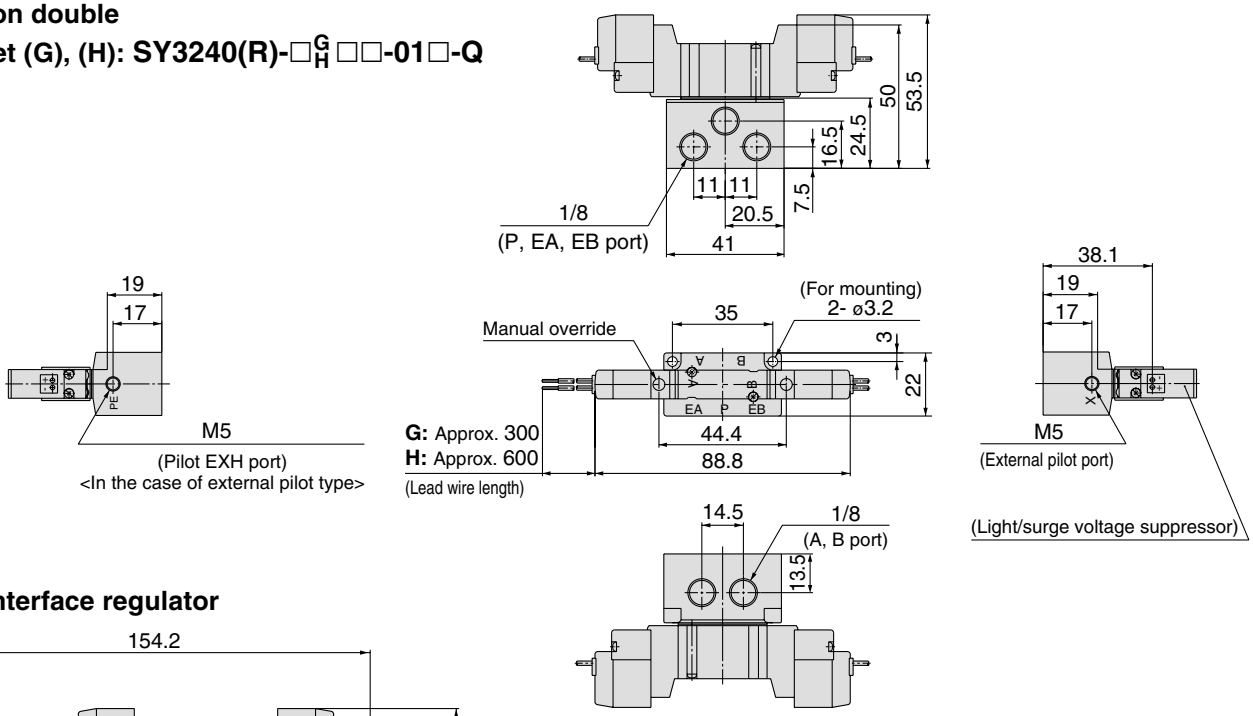

With interface regulator

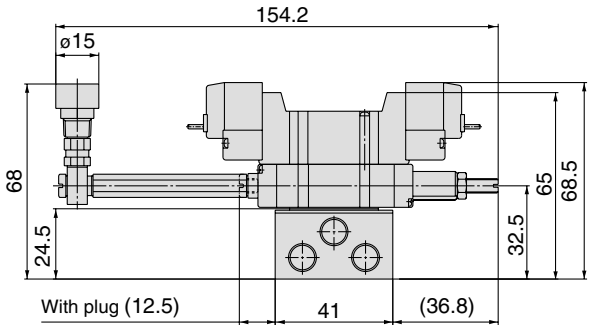

L plug connector (L):
SY3240(R)-□L□□-01□-Q

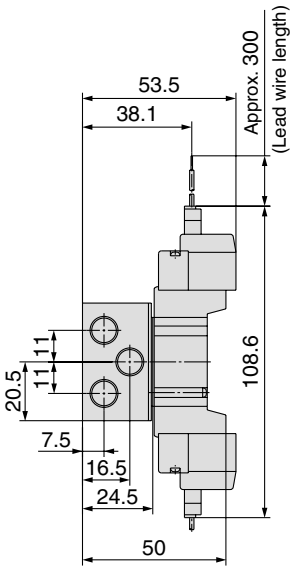

M plug connector (M):
SY3240(R)-□M□□-01□-Q

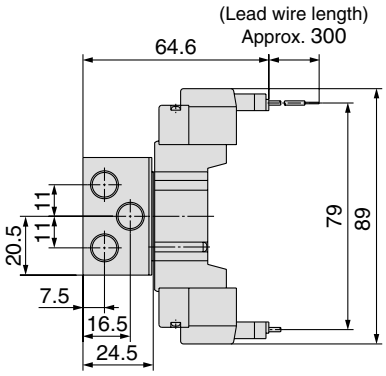

M8 connector (WO):
SY3240(R)-□WO□□-01□-Q

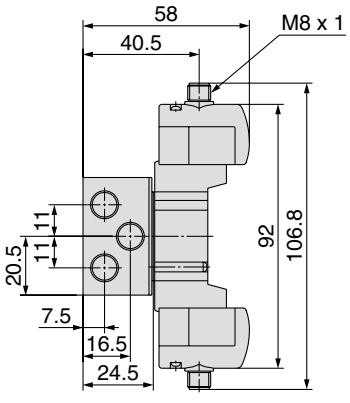

Note) Refer to back page 12 for dimensions of connector types.

Dimensions: Series SY3000

3 position closed center / exhaust center / pressure center
Grommet (G), (H): SY3$^{3}_{5}$40(R)-□$^{G}_{H}$□□-01□-Q

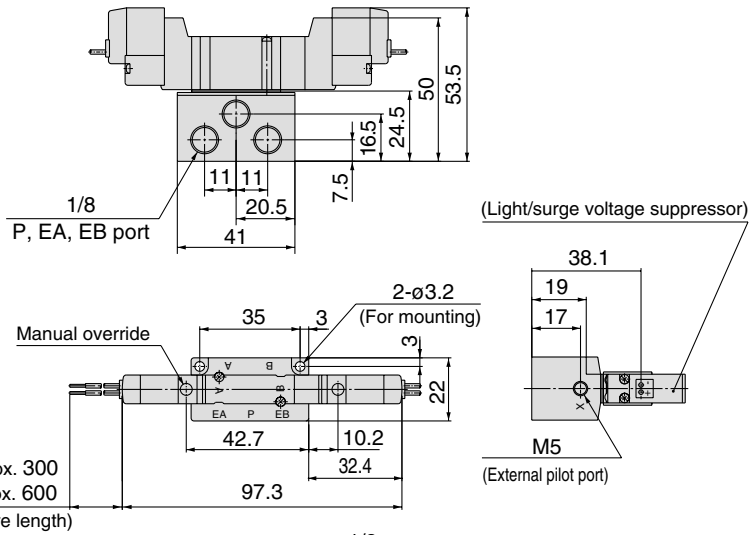

With interface regulator

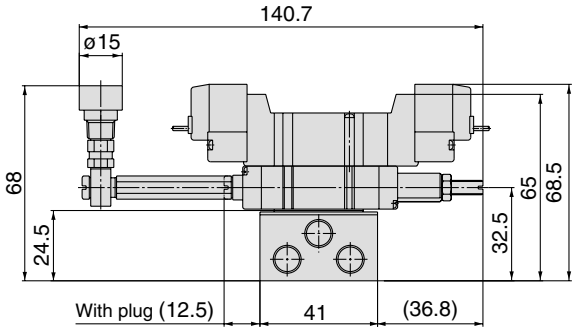

L plug connector (L):
SY3$^{3}_{5}$40(R)-□L□□-01□-Q

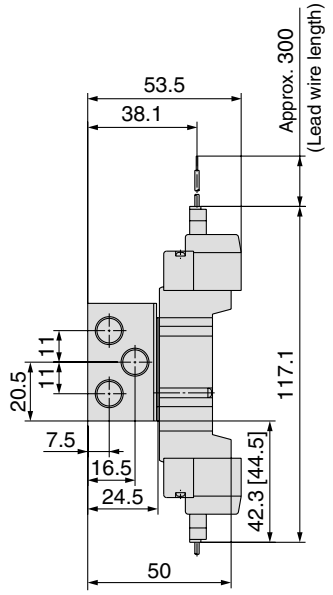

M plug connector (M):
SY3$^{3}_{5}$40(R)-□M□□-01□-Q

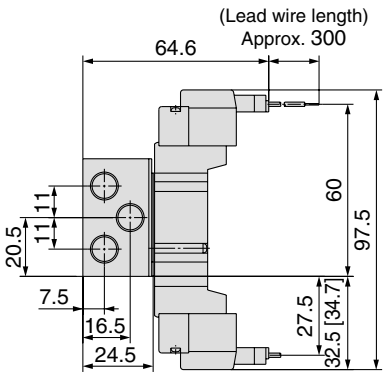

M8 connector (WO):
SY3$^{3}_{5}$40(R)-□WO□□-01□-Q

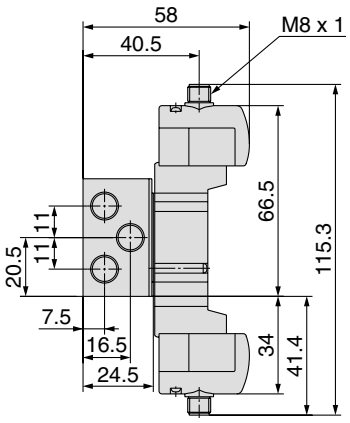

Note) Refer to back page 12 for dimensions of connector types.

Dimensions: Series SY5000

2 position single

Grommet (G), (H): SY5140(R)-□$^{G}_{H}$□□-02□-Q

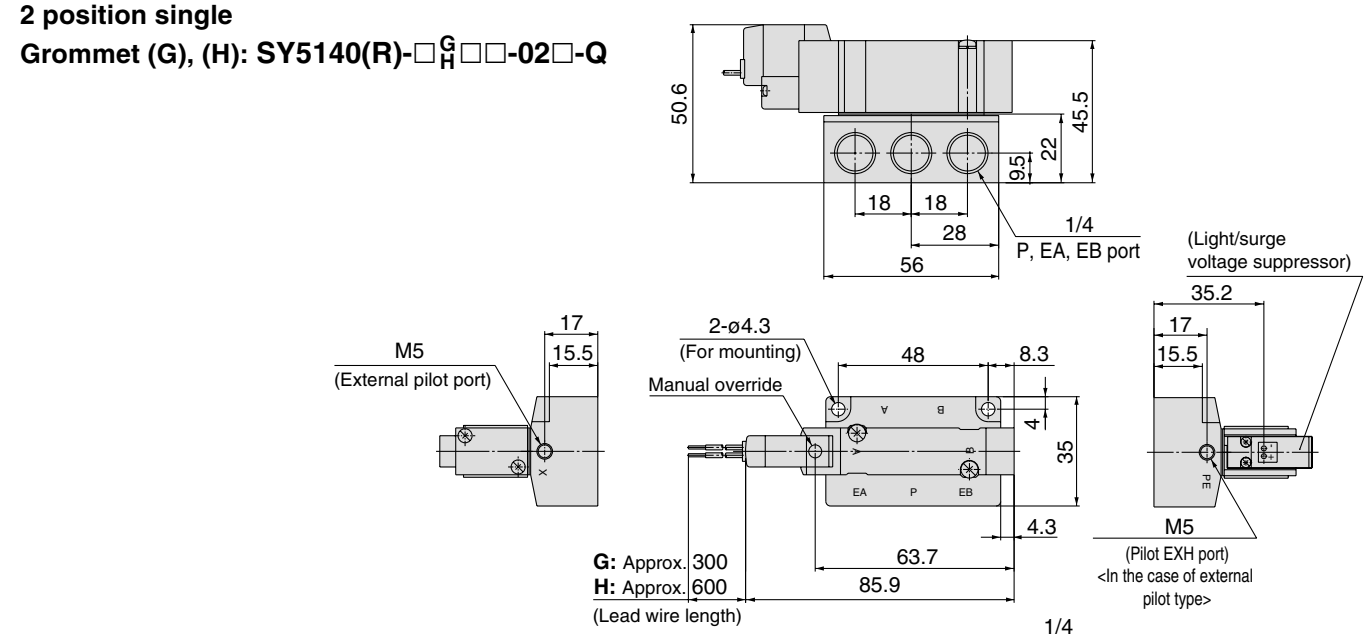

With interface regulator

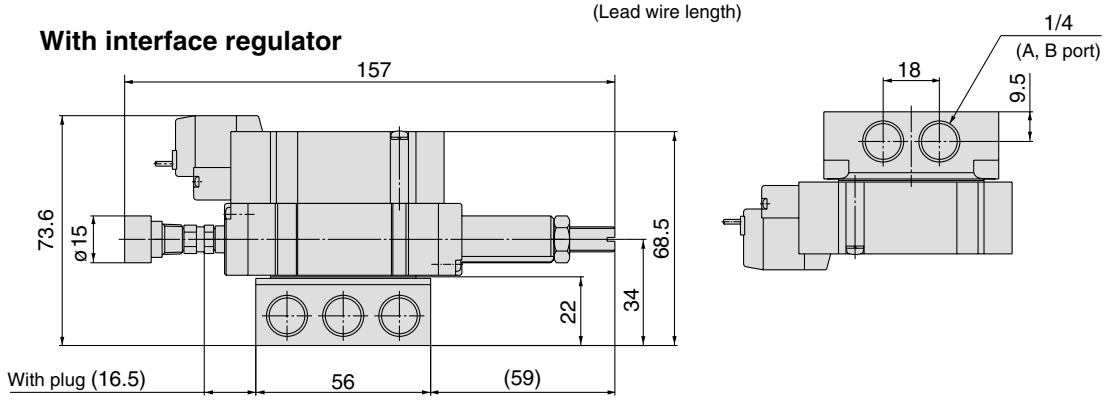

L plug connector (L): SY5140(R)-□L□□-02□-Q

M plug connector (M): SY5140(R)-□M□□-02□-Q

DIN terminal (D): SY5140(R)-□D□□-02□-Q

M8 connector (WO): SY5140(R)-□WO□□-02□-Q

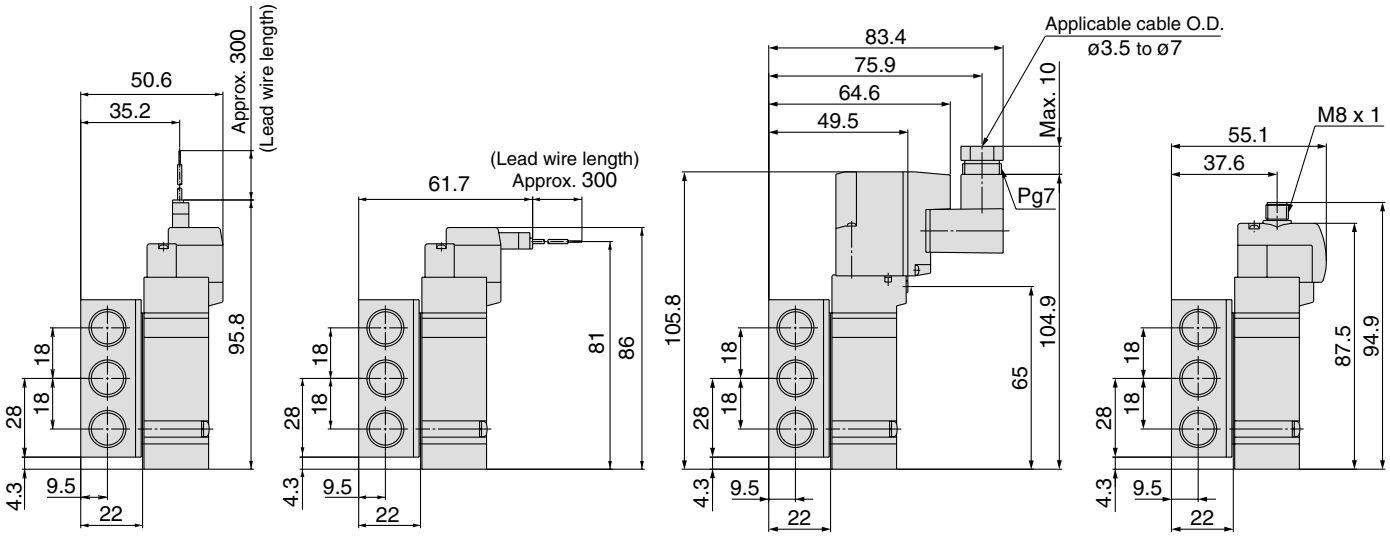

Note) Refer to back page 12 for dimensions of connector types.

Dimensions: Series SY5000

2 position double

Grommet (G), (H): SY5240(R)-□$^{G}_{H}$□□-02□-Q

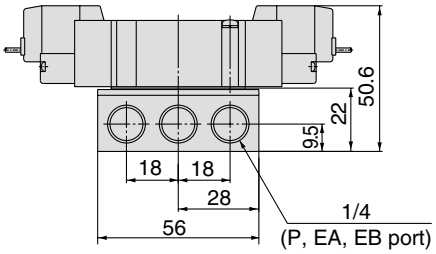

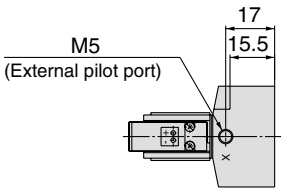

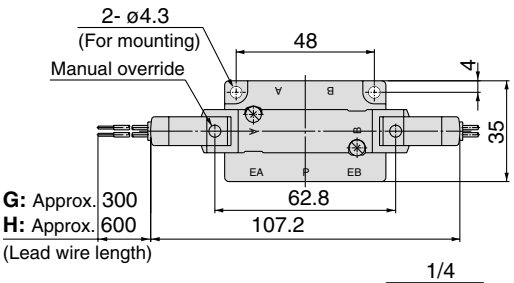

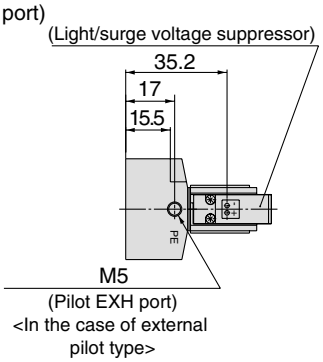

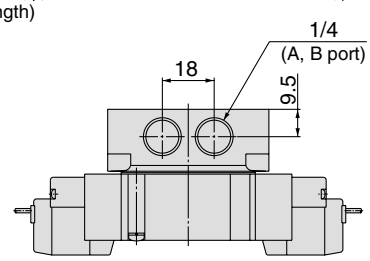

With interface regulator

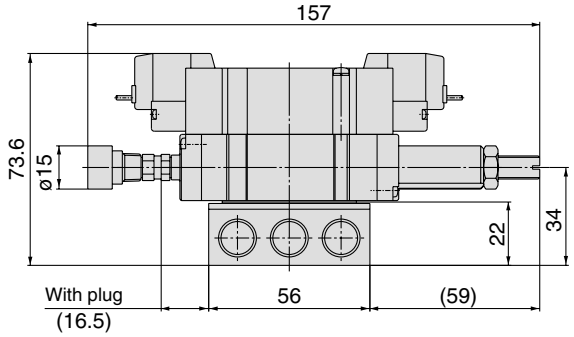

L plug connector (L): SY5240(R)-□L□□-02□-Q

M plug connector (M): SY5240(R)-□M□□-02□-Q

DIN terminal (D): SY5240(R)-□D□□-02□-Q

M8 connector (WO): SY5240(R)-□WO□□-02□-Q

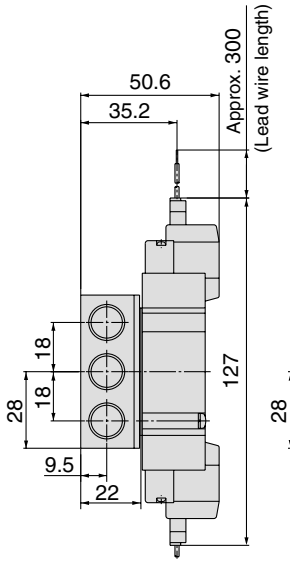

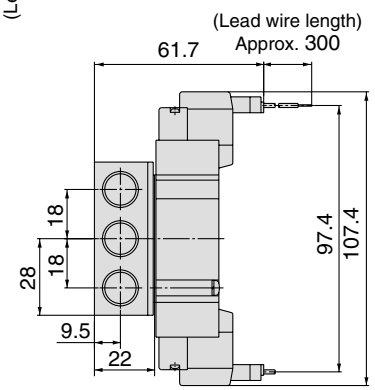

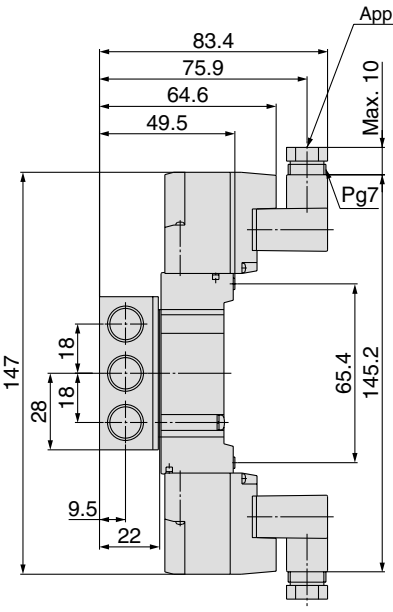

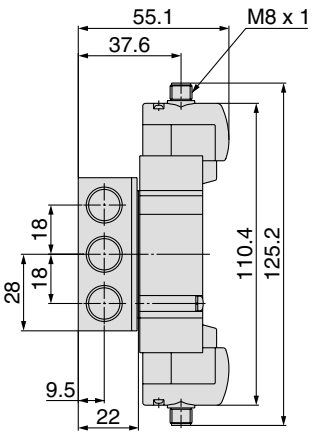

Note) Refer to back page 12 for dimensions of connector types.

Dimensions: Series SY5000

3 position closed center / exhaust center / pressure center

Grommet (G), (H): SY5$^{3}_{5}$40(R)-□$^{G}_{H}$□□-02□-Q

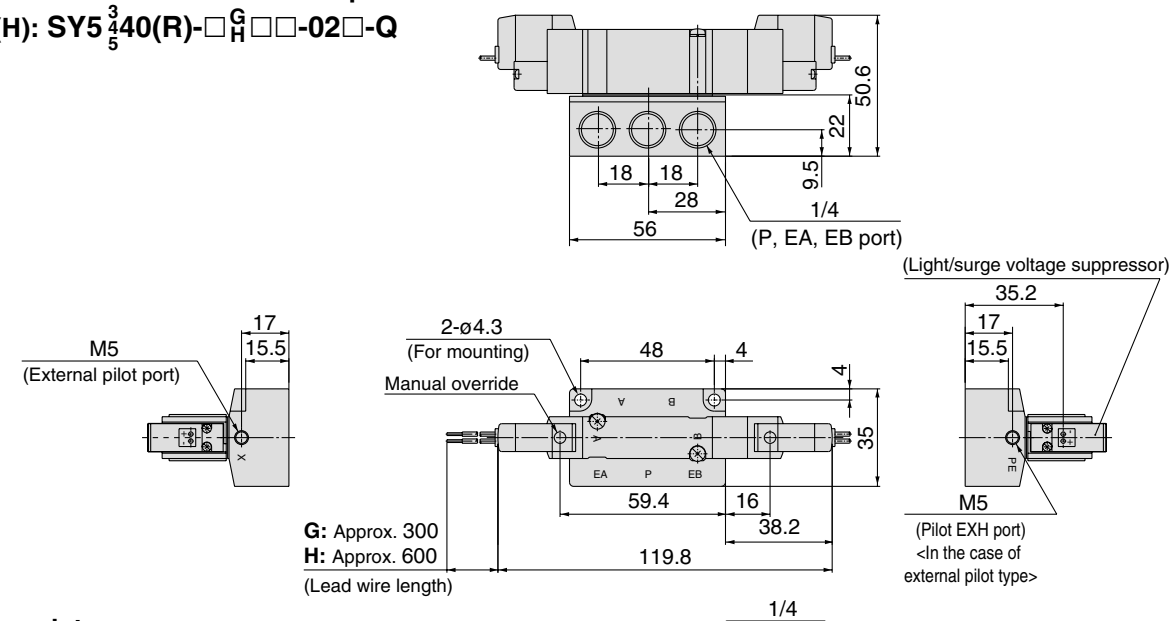

With interface regulator

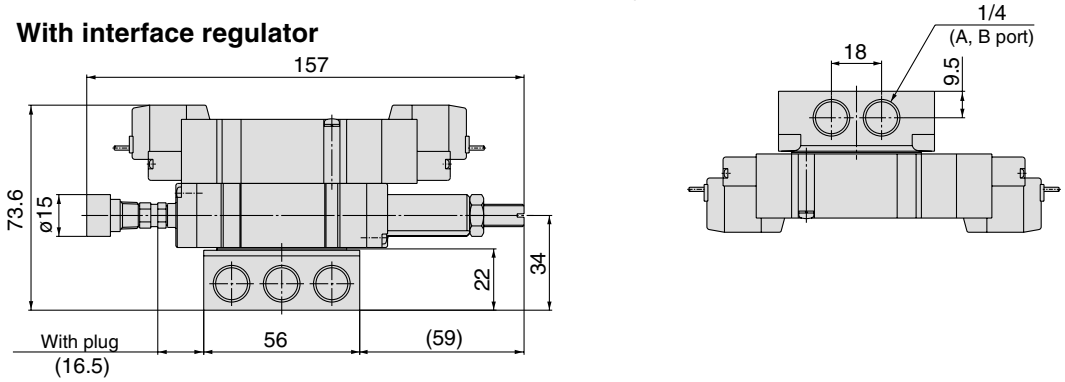

L plug connector (L): **SY5$^{3}_{5}$40(R)-□L□□-02□-Q**

M plug connector (M): **SY5$^{3}_{5}$40(R)-□M□□-02□-Q**

DIN terminal (D): **SY5$^{3}_{5}$40(R)-□D□□-02□-Q**

M8 connector (WO): **SY5$^{3}_{5}$40(R)-□WO□□-02□-Q**

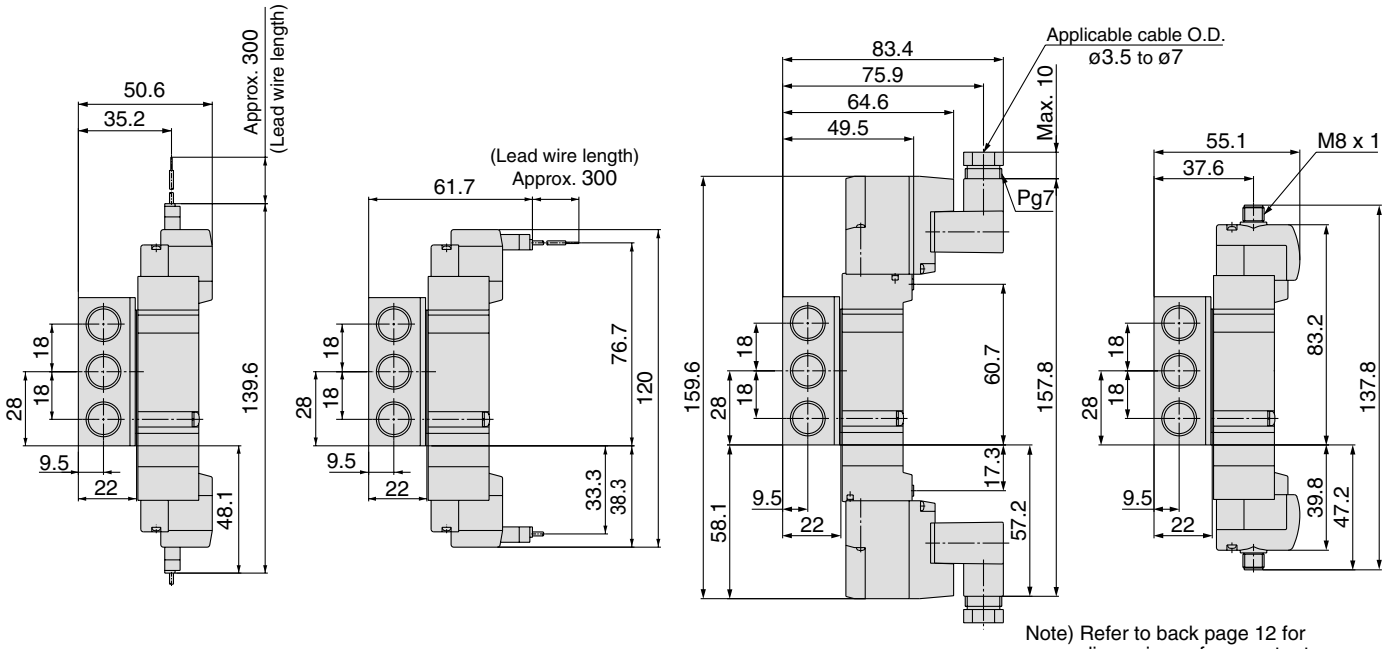

Note) Refer to back page 12 for dimensions of connector types.

Dimensions: Series SY7000

2 position single

Grommet (G), (H): SY7140(R)-□$^{G}_{H}$□□-$^{02}_{03}$□-Q

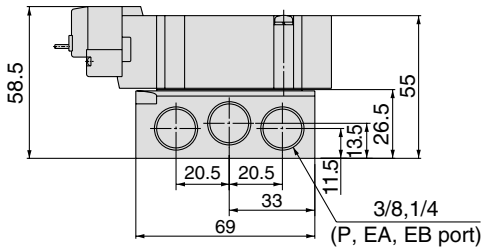

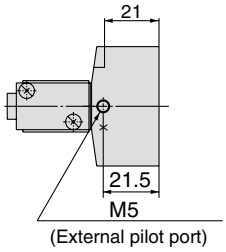

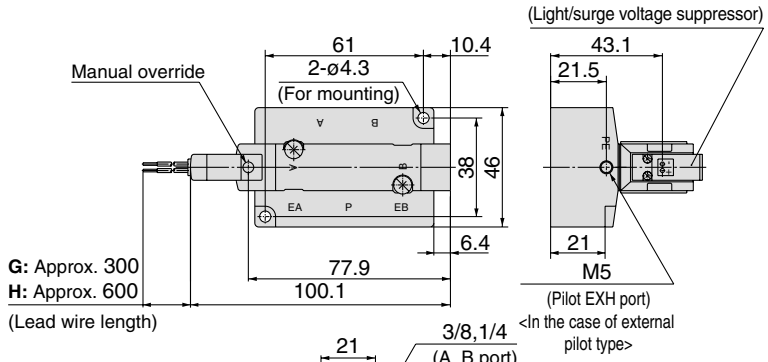

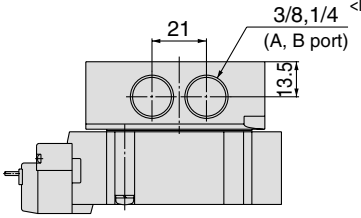

With interface regulator

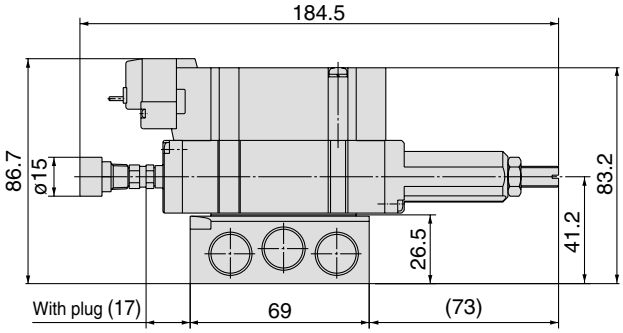

L plug connector (L):
SY7140(R)-□L□□-$^{02}_{03}$□-Q

M plug connector (M):
SY7140(R)-□M□□-$^{02}_{03}$□-Q

DIN terminal (D):
SY7140(R)-□D□□-$^{02}_{03}$□-Q

M8 connector (WO):
SY7140(R)-□WO□□-$^{02}_{03}$□-Q

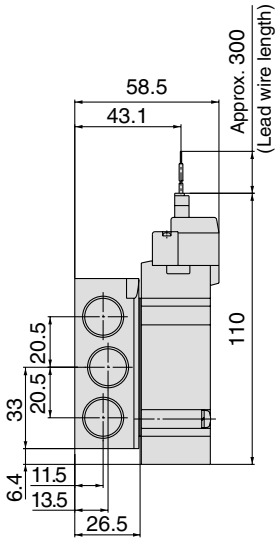

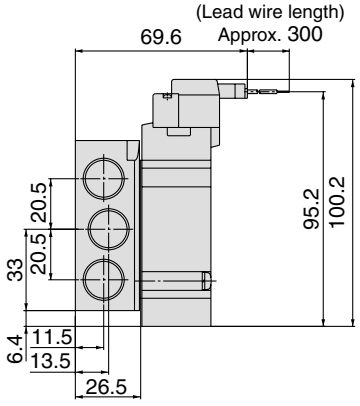

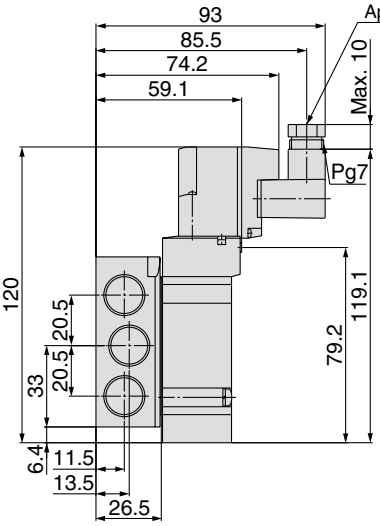

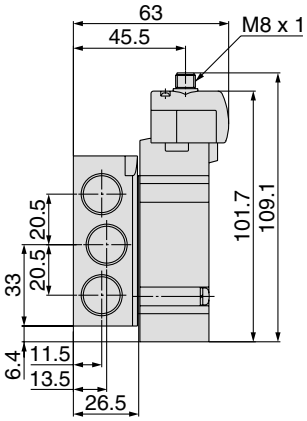

Note) Refer to back page 12 for dimensions of connector types.

Dimensions: Series SY7000

2 position double

Grommet (G), (H): SY7240(R)-□$^{G}_{H}$□□-$^{02}_{03}$□-Q

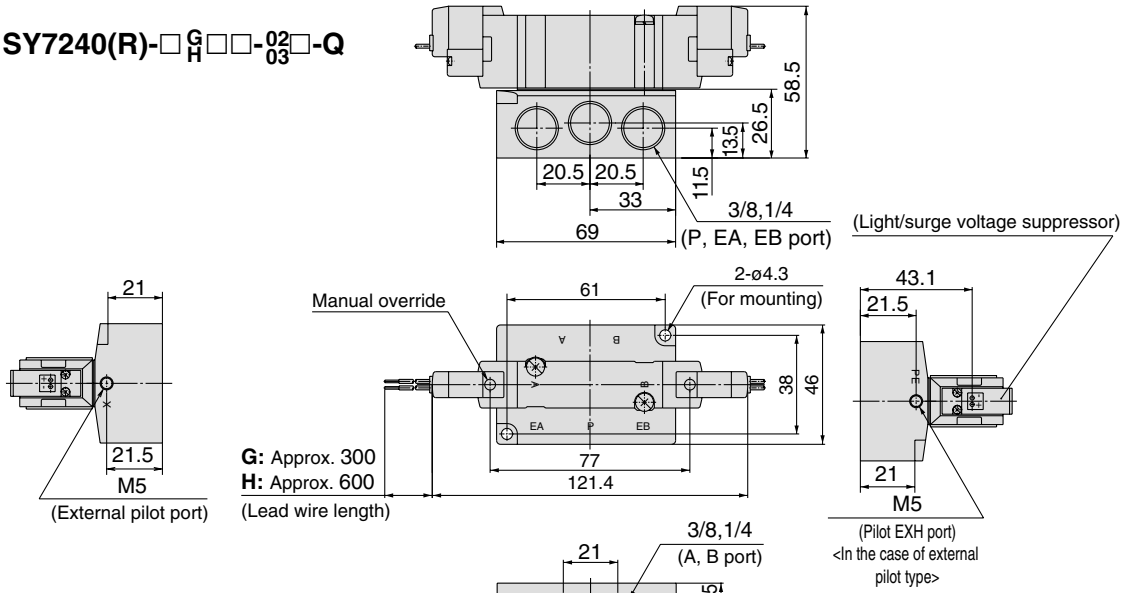

With interface regulator

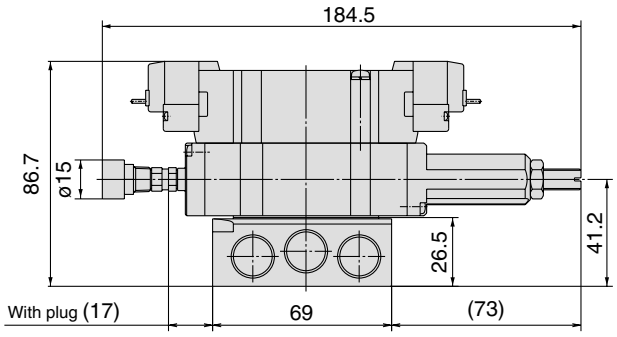

L plug connector: L
SY7240(R)-□L□□-$^{02}_{03}$□-Q

M plug connector: M
SY7240(R)-□M□□-$^{02}_{03}$□-Q

DIN terminal (D):
SY7240(R)-□D□□-$^{02}_{03}$□-Q

M8 connector (WO):
SY7240(R)-□WO□□-$^{02}_{03}$□-Q

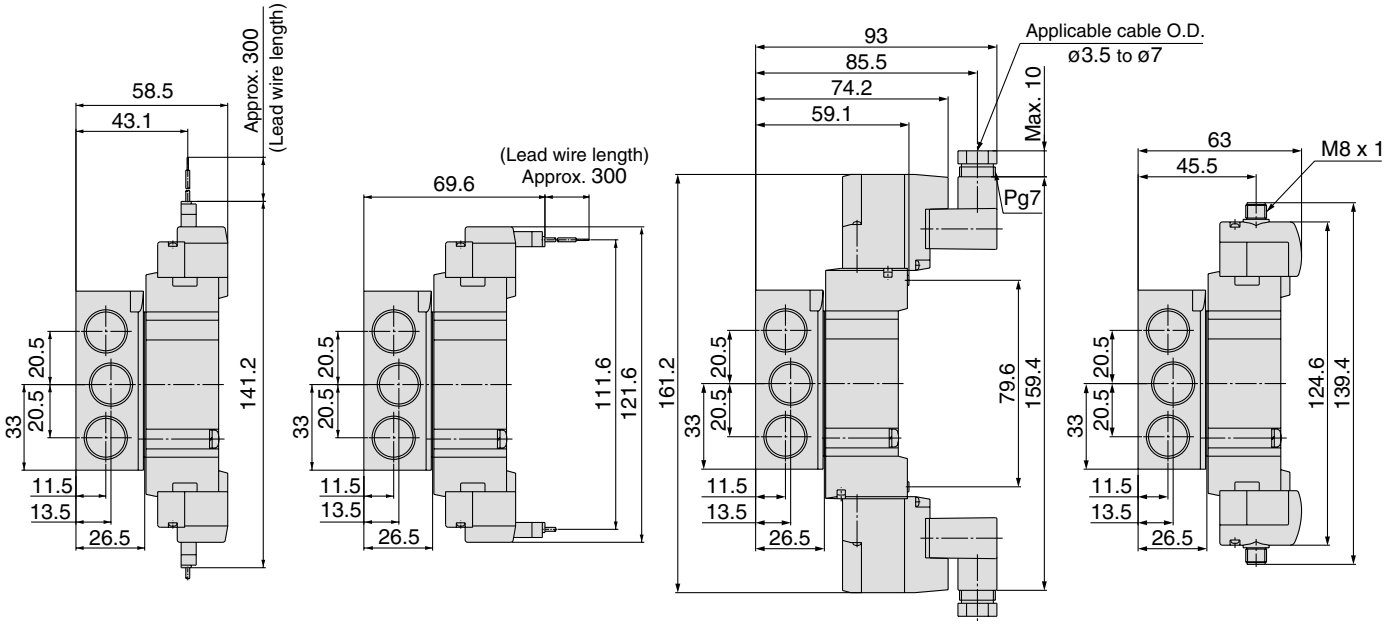

Note) Refer to back page 12 for dimensions of connector types.

Dimensions: Series SY7000

3 position closed center / exhaust center / pressure center

Grommet (G), (H): SY7$^{3}_{4}$40(R)-□$^{G}_{H}$□□-$^{02}_{03}$□-Q

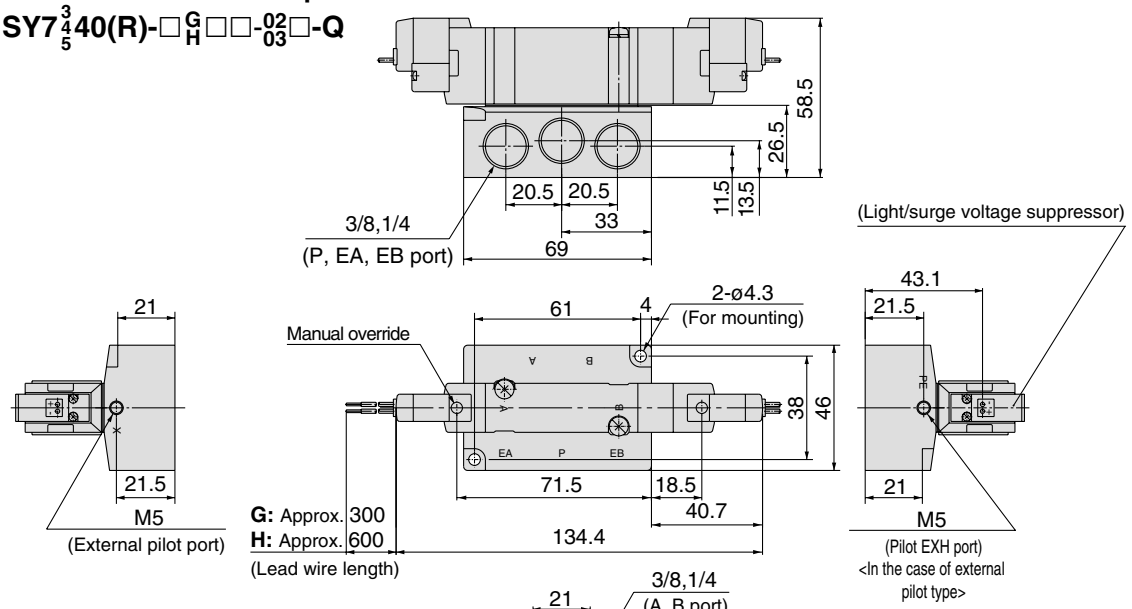

With interface regulator

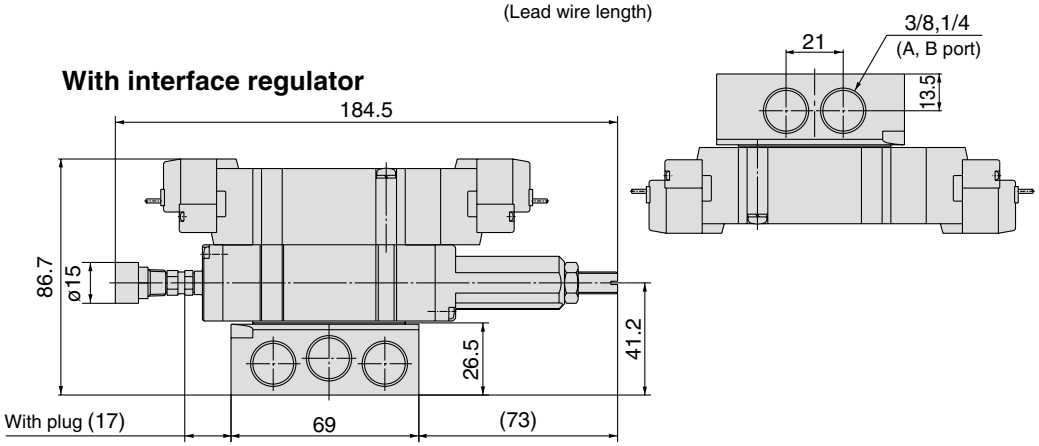

L plug connector: L
SY7$^{3}_{4}$40(R)-□L□□-$^{02}_{03}$□-Q

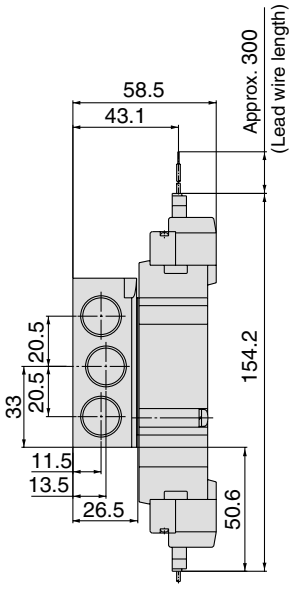

M plug connector: M
SY7$^{3}_{4}$40(R)-□M□□-$^{02}_{03}$□-Q

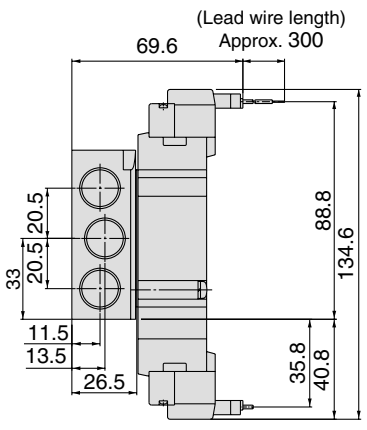

DIN terminal (D):
SY7$^{3}_{4}$40(R)-□D□□-$^{02}_{03}$□-Q

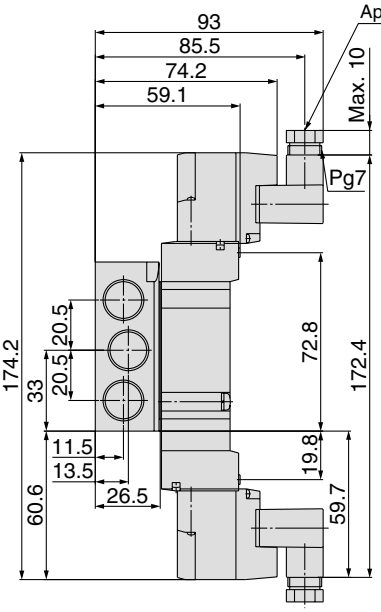

M8 connector (WO):
SY7$^{3}_{4}$40(R)-□WO□□-$^{02}_{03}$□-Q

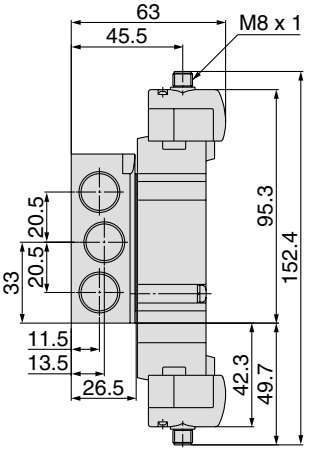

Note) Refer to back page 12 for dimensions of connector types.

Dimensions: Series SY9000

2 position single
Grommet (G), (H): SYJ9140-□$^{G}_{H}$□□-$^{03}_{04}$□-Q

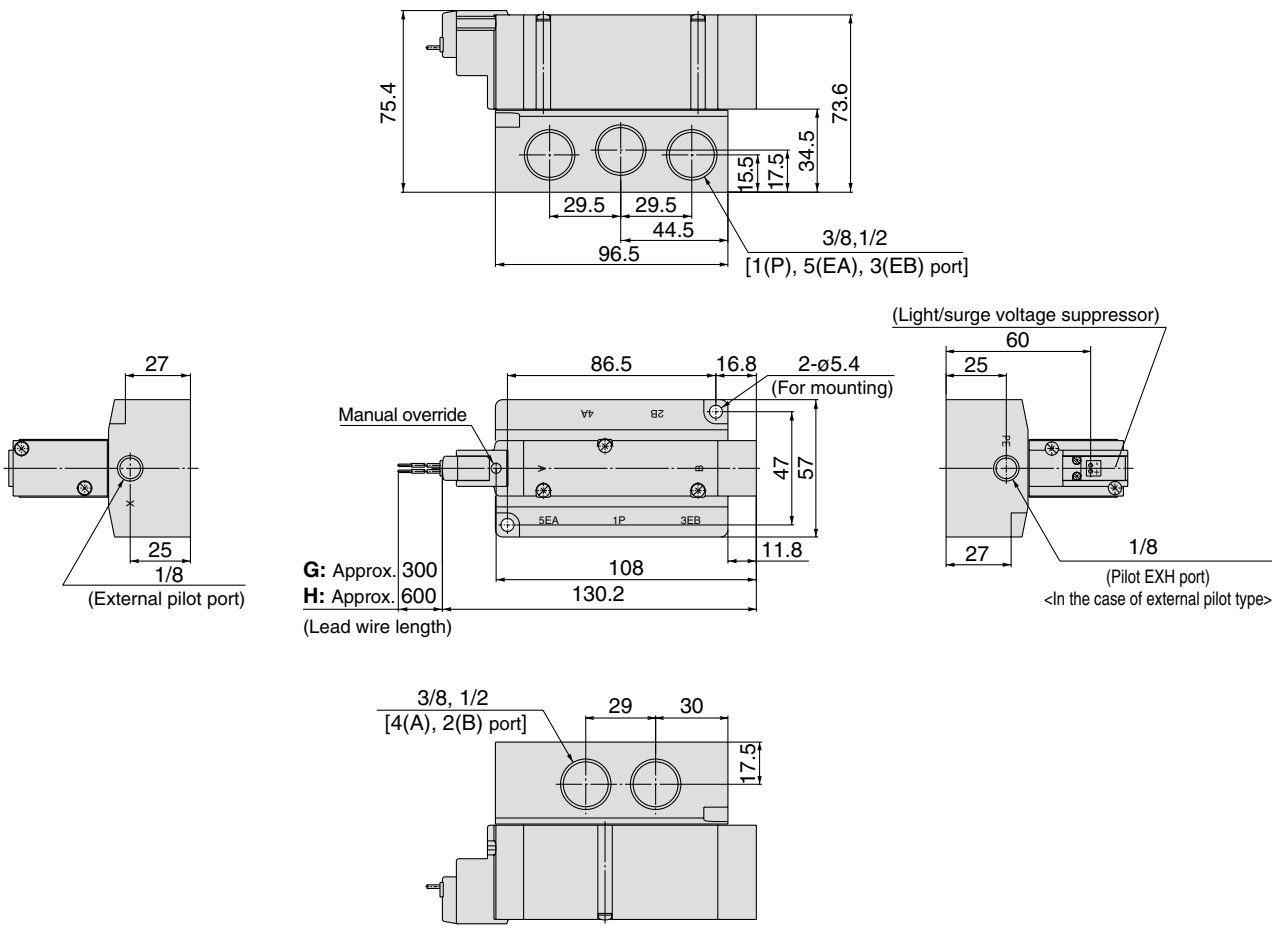

L plug connector (L):
SY9140(R)-□L□□-$^{03}_{04}$□-Q

M plug connector (M):
SY9140(R)-□M□□-$^{03}_{04}$□-Q

DIN terminal (D):
SY9140(R)-□D□□-$^{03}_{04}$□-Q

M8 connector (WO):
SY9140(R)-□WO□□-$^{03}_{04}$□-Q

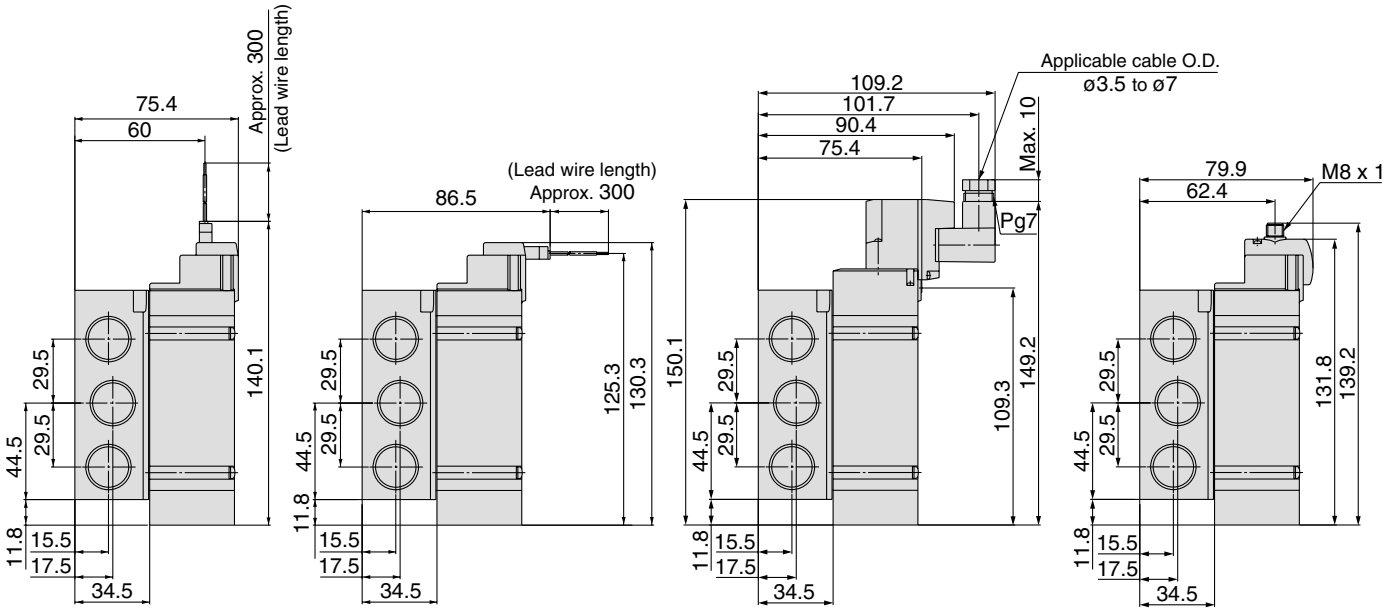

Note) Refer to back page 12 for dimensions of connector types.

Dimensions: Series SY9000

2 position double
Grommet (G), (H): SY9240(R)-□$^{G}_{H}$□□-$^{03}_{04}$□-Q

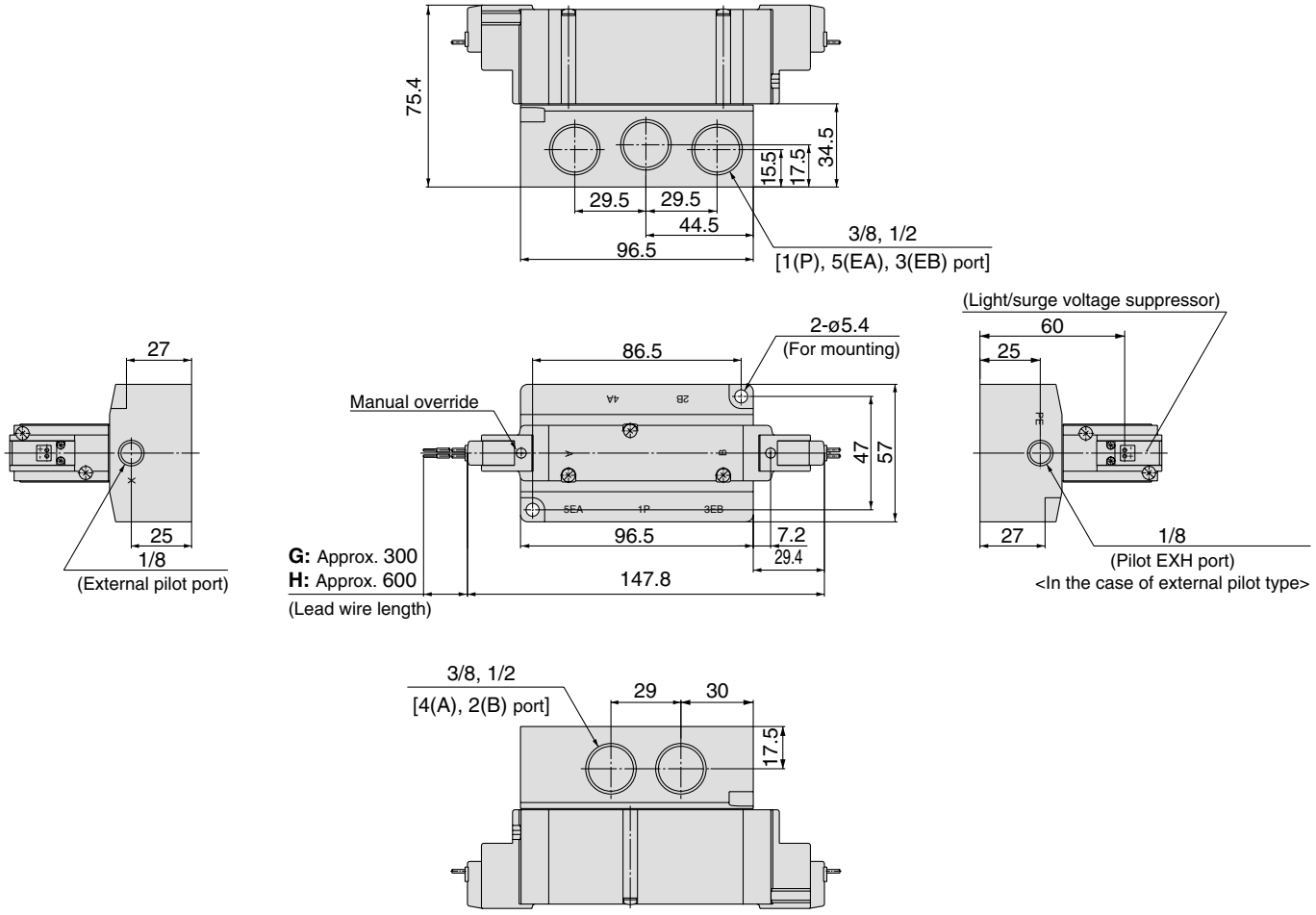

L plug connector (L): SY9240(R)-□L□□-$^{03}_{04}$□-Q

M plug connector (M): SY9240(R)-□M□□-$^{03}_{04}$□-Q

DIN terminal (D): SY9240(R)-□D□□-$^{03}_{04}$□-Q

M8 connector (WO): SY9240(R)-□WO□□-$^{03}_{04}$□-Q

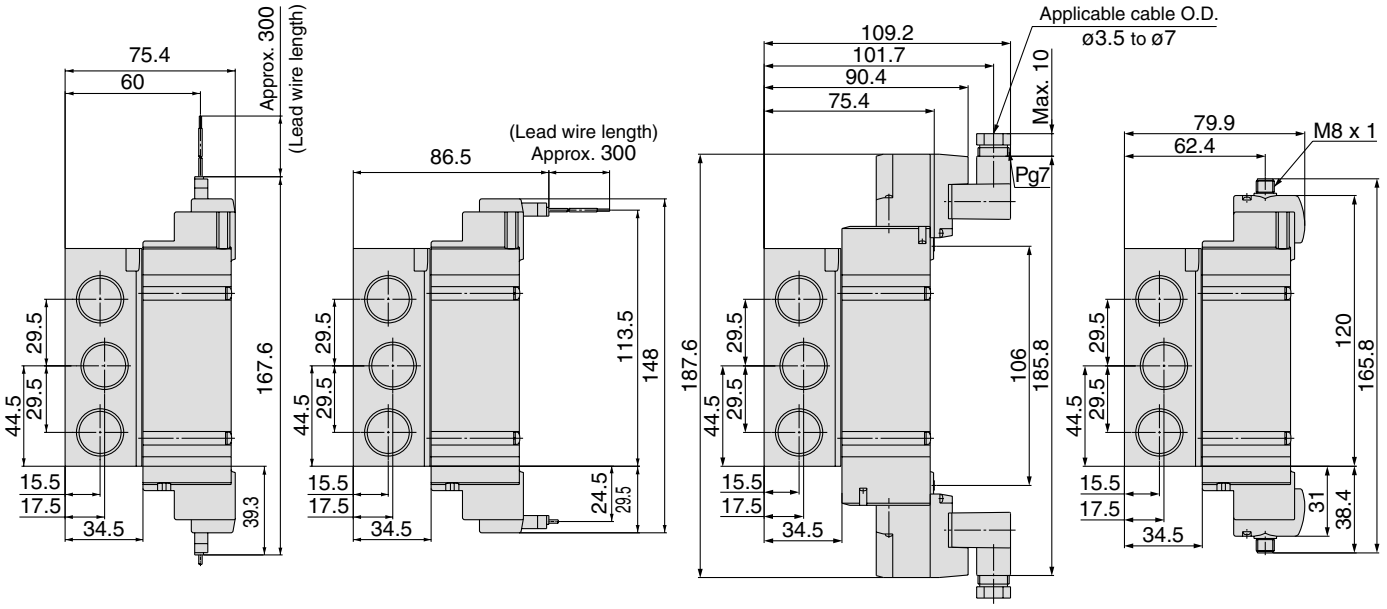

Note) Refer to back page 12 for dimensions of connector types.

Dimensions: Series SY9000

3 position closed center / exhaust center / pressure center

Grommet (G), (H): SY9$^{3}_{5}$40-□$^{G}_{H}$□□-$^{03}_{04}$□-Q

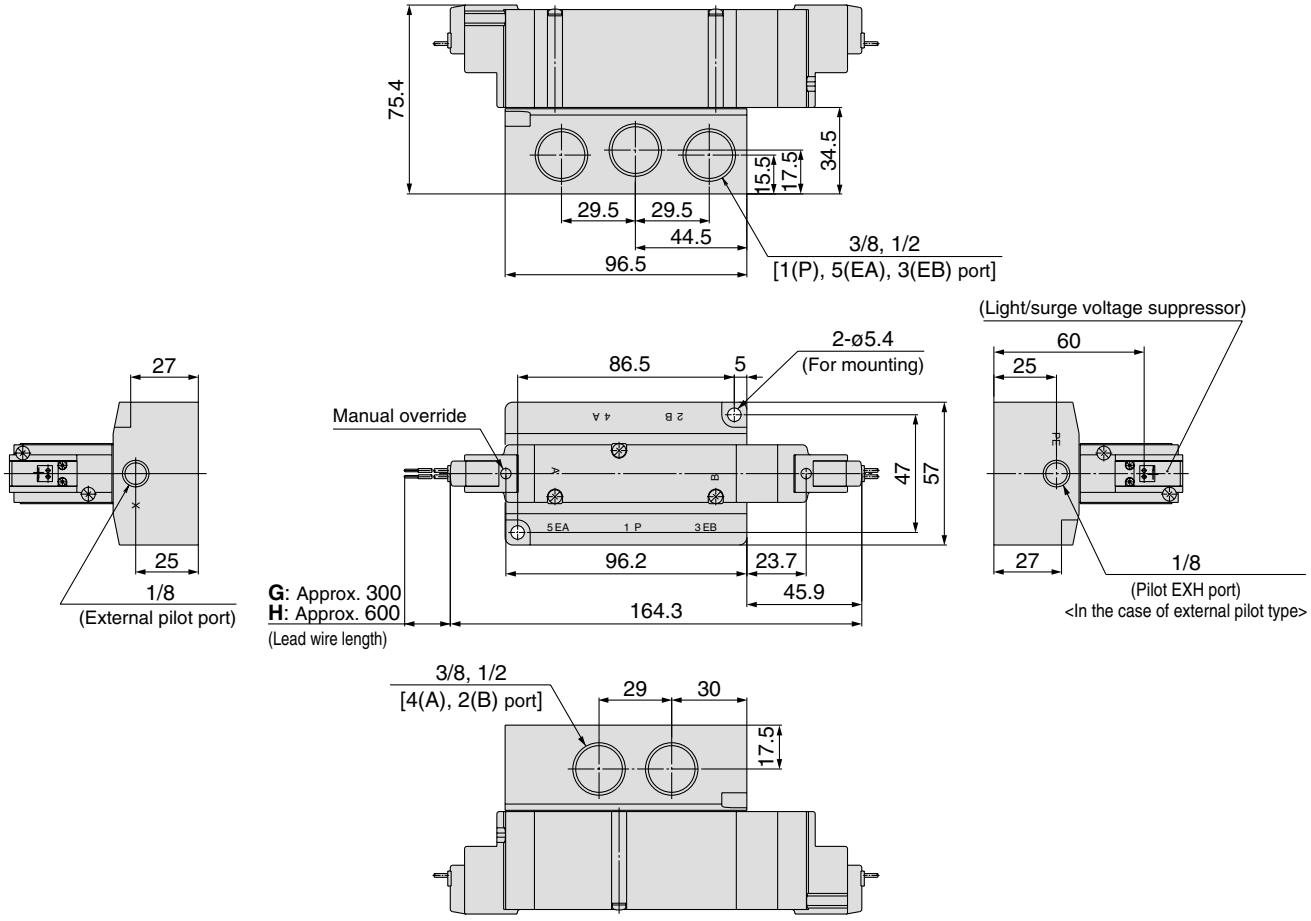

L plug connector (L): SY9$^{3}_{5}$40(R)-□L□□-$^{03}_{04}$□-Q

M plug connector (M): SY9$^{3}_{5}$40(R)-□M□□-$^{03}_{04}$□-Q

DIN terminal (D): SY9$^{3}_{5}$40(R)-□D□□-$^{03}_{04}$□-Q

M8 connector (WO): SY9$^{3}_{5}$40(R)-□WO□□-$^{03}_{04}$□-Q

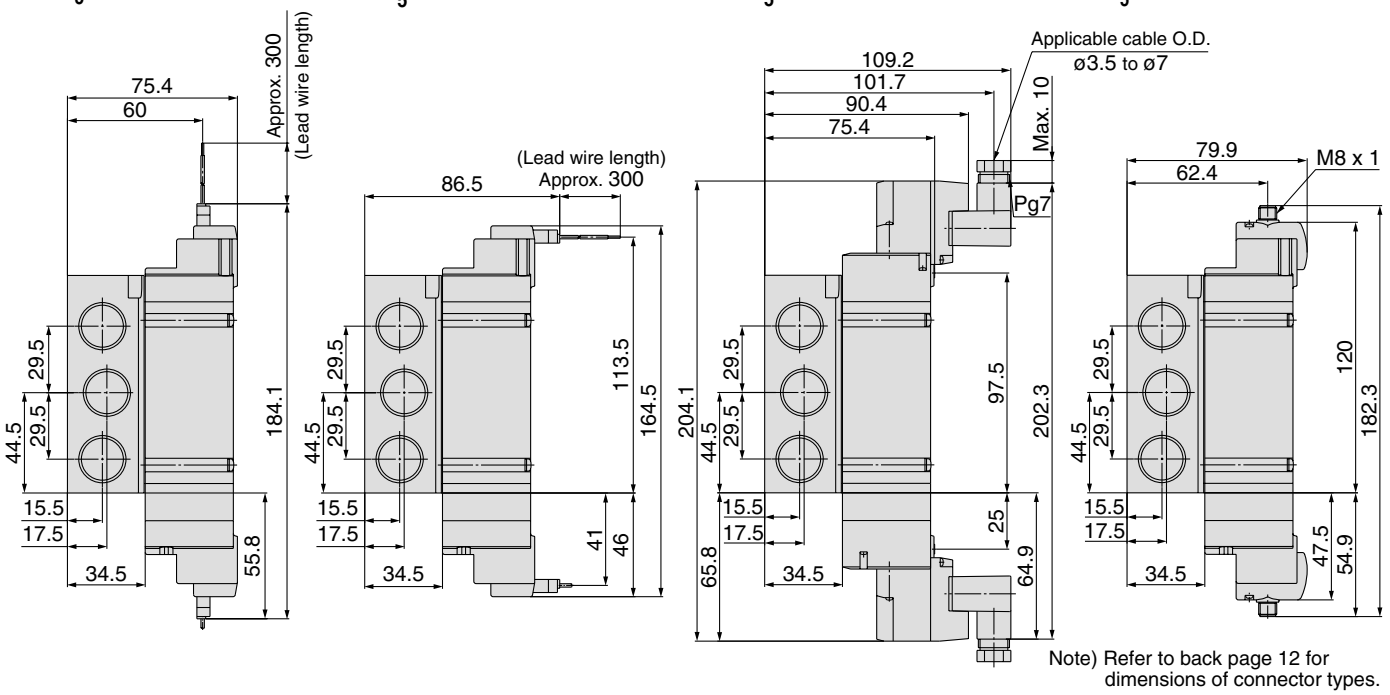

Note) Refer to back page 12 for dimensions of connector types.

Type 20

5 Port Solenoid Valve
Series SY3000/5000/7000
Body Ported
Bar Stock Type/Individual Wiring

How to Order Manifold

SS5Y [5] — 20 — [05] — [ ] **-Q**

Manifold series

3	SY3000
5	SY5000
7	SY7000

Thread type

-	Rc
00F	G
00N	NPT
00T	NPTF

Stations

02	2 stations
⋮	⋮
20	20 stations

∗ This also includes the number of blanking plate assemblies.

How to Order Valve Manifold Assembly (Example)

Example

Cylinder port size
C6: With one-touch fitting for ø6

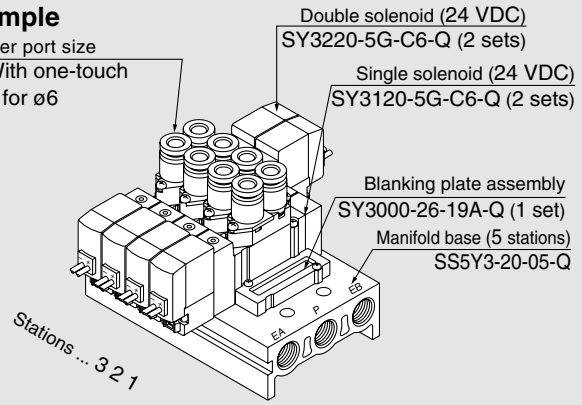

SS5Y3-20-05-Q **1 set (Type 20, 5 station manifold base part no.)**
∗ **SY3000-26-19A-Q** **1 set (Blanking plate assembly part no.)**
∗ **SY3120-5G-C6-Q** **2 sets (Single solenoid part no.)**
∗ **SY3220-5G-C6-Q** **2 sets (Double solenoid part no.)**

→ The asterisk denotes the symbol for assembly.
Prefix it to the part nos. of the solenoid valve, etc.

Add the valve and option part number under the manifold base part number.
In the case of complex arrangement, specify them on the manifold specification sheet.

How to Order Valve

SY [5] [1] **20** [ ] – [5] [L] [ ] [ ] – [01] [ ] **-Q**

Series

3	SY3000
5	SY5000
7	SY7000

Type of actuation

1	2 position single
2	2 position double
3	3 position closed center
4	3 position exhaust center
5	3 position pressure center

Coil specifications

-	Standard
T	With power saving circuit (24 VDC, 12 VDC only)

∗ Power saving circuit is not available in the case of D, DO or W□ type.

Rated voltage

For DC

5	24 VDC
6	12 VDC
V	6 VDC
S	5 VDC
R	3 VDC

AC (50/60 Hz)

1	100 VAC
2	200 VAC
3	110 VAC [115 VAC]
4	220 VAC [230 VAC]

∗ DC specifications of type D and DO is only available with 12 and 24 VDC.
∗ AC specification is only available with D and DO type.

Electrical entry

24, 12, 6, 5, 3 VDC			24, 12 VDC/ 100, 110, 200, 220 VAC	24, 12, 6, 5, 3 VDC
Grommet	**L plug connector**	**M plug connector**	**DIN terminal** Note2)	**M8 connector** ∗
G: Lead wire length 300 mm **H**: Lead wire length 600 mm	**L**: With lead wire (Length 300 mm) **LN**: Without lead wire **LO**: Without connector	**M**: With lead wire (Length 300 mm) **MN**: Without lead wire **MO**: Without connector	**D**: With connector **DO**: Without connector	**WO**: Without connector cable **W□**: With connector cable Note 1)

∗ LN, MN type: with 2 sockets.
∗ For DIN terminal of SY3000 series, refer to back page 10.
∗ DIN terminal type "Y" which conforms to EN-175301-803C (former DIN43650C) is also available. For details, refer to page 210.
∗ For connector cable of M8 connector, refer to back page 12.
∗ Connector M8 type "WA" conforming to IEC 60947-5-2 standard, is also available. For details, see page 211.
Note 1) Enter the cable length symbols in □. Please be sure to fill in the blank referring to back page 13.
Note2) SY5000/7000 only).

Light/surge voltage suppressor

Electrical entry for G, H, L, M, W

-	Without light/surge voltage suppressor
S	With surge voltage suppressor
Z	With light/surge voltage suppressor
R	With surge voltage suppressor (Non-polar type)
U	With light/surge voltage suppressor (Non-polar type)

∗ Power saving circuit is only available in the "Z" type.

Electrical entry for D (SY5000/7000 only)

-	Without light/surge voltage suppressor
S	With surge voltage suppressor (Non-polar type)
Z	With light/surge voltage suppressor (Non-polar type)

∗ DOZ is not available.
∗ For AC voltage valves there is no "S" option. It is already built-in to the rectifier circuit.

Manual override

-	Non-locking push type
D	Push-turn locking slotted type
E	Push-turn locking lever type

Thread type

-	Rc
F	G
N	NPT
T	NPTF

A, B port size

Thread piping

Symbol	Port size	Applicable series
M5	M5	SY3000
01	1/8	SY5000
02	1/4	SY7000

One-touch fitting (Metric size)

Symbol	Port size	Applicable series
C4	One-touch fitting for ø4	SY3000
C6	One-touch fitting for ø6	
C4	One-touch fitting for ø4	SY5000
C6	One-touch fitting for ø6	
C8	One-touch fitting for ø8	
C8	One-touch fitting for ø8	SY7000
C10	One-touch fitting for ø10	

One-touch fitting (Inch size)

Symbol	Port size	Applicable series
N3	One-touch fitting for ø5/32"	SY3000
N7	One-touch fitting for ø1/4"	
N3	One-touch fitting for ø5/32"	SY5000
N7	One-touch fitting for ø1/4"	
N9	One-touch fitting for ø5/16"	
N9	One-touch fitting for ø5/16"	SY7000
N11	One-touch fitting for ø3/8"	

Note) When placing an order for body ported solenoid valve as a single unit, mounting bolt for manifold and gasket are not attached. Order them separately, if necessary.
(For details, refer to catalogue in page 56.)

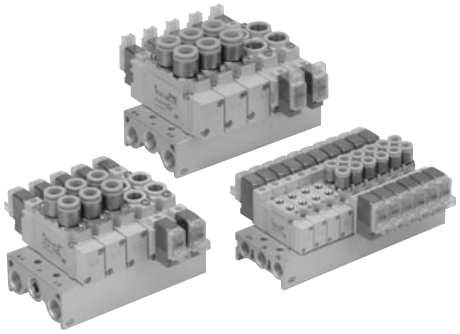

Manifold Specifications

Model		SS5Y3-20	SS5Y5-20	SS5Y7-20
Applicable valve		SY3□20	SY5□20	SY7□20
Manifold type		Single base/B mount		
P (SUP)/R (EXH)		Common SUP, Common EXH		
Valve stations		2 to 20 stations Note1)		
A, B port location		Valve		
Port size	P, EA, EB port	1/8	1/4	1/4
	A, B port	M5 C4(One-touch fitting for ø4) C6 (One-touch fitting for ø6)	1/8 C4 (One-touch fitting for ø4) C6 (One-touch fitting for ø6) C8 (One-touch fitting for ø8)	1/4 C8 (One-touch fitting for ø8) C10 (One-touch fitting for ø10)
Manifold base weight W (g) n: Stations		W = 13n + 35	W = 36n + 64	W = 43n + 64

Note 1) For more than 10 stations (more than 5 stations in case of SS5Y7), supply pressure to P port on both sides and exhaust from EA/EB port on both sides.
Note 2) Refer to “Manifold Option” on page 56.

Flow Characteristics

Model	Port size		Flow characteristics							
	1, 5, 3 (P, EA, EB)	4, 2 (A, B)	1 → 4/2 (P → A/B)				4/2 → 5/3 (A/B → EA/EB)			
			C (dm³/(s·bar))	b	Cv	Q[ℓ/min(ANR)]*	C (dm³/(s·bar))	b	Cv	Q[ℓ/min(ANR)]*
SS5Y3-20	1/8	C6	0.72	0.29	0.18	182	0.80	0.36	0.21	212
SS5Y5-20	1/4	C8	1.9	0.28	0.48	477	2.2	0.20	0.53	527
SS5Y7-20	1/4	C10	3.6	0.31	0.93	921	3.6	0.27	0.88	898

Note) The value is for manifold base with 5 stations and individually operated 2 position type.
* These values have been calculated according to ISO6358 and represent the flow rate measured in standard conditions at an upstream pressure of 0.6 MPa (relative pressure) and a differential pressure of 0.1MPa.

SY3000: SS5Y3-20-Stations-□-Q

Grommet (G)

Dimensions when mounting individual EXH spacer

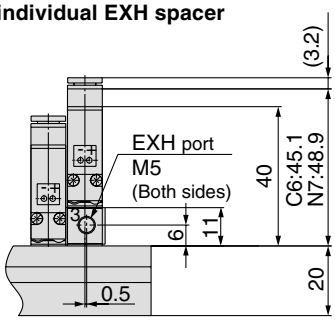

Dimensions when mounting individual SUP spacer

(SUP port is at the end plate of single solenoid.)

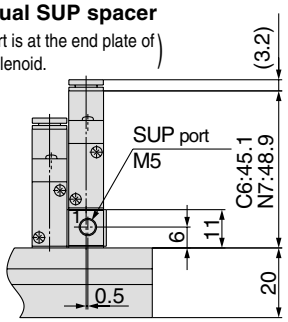

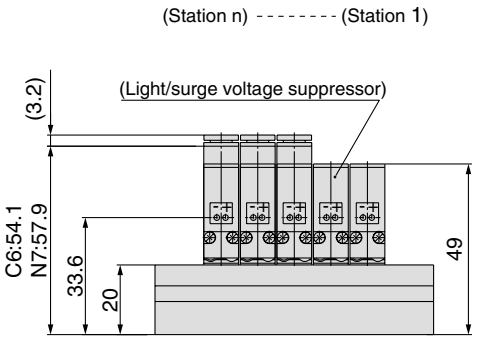

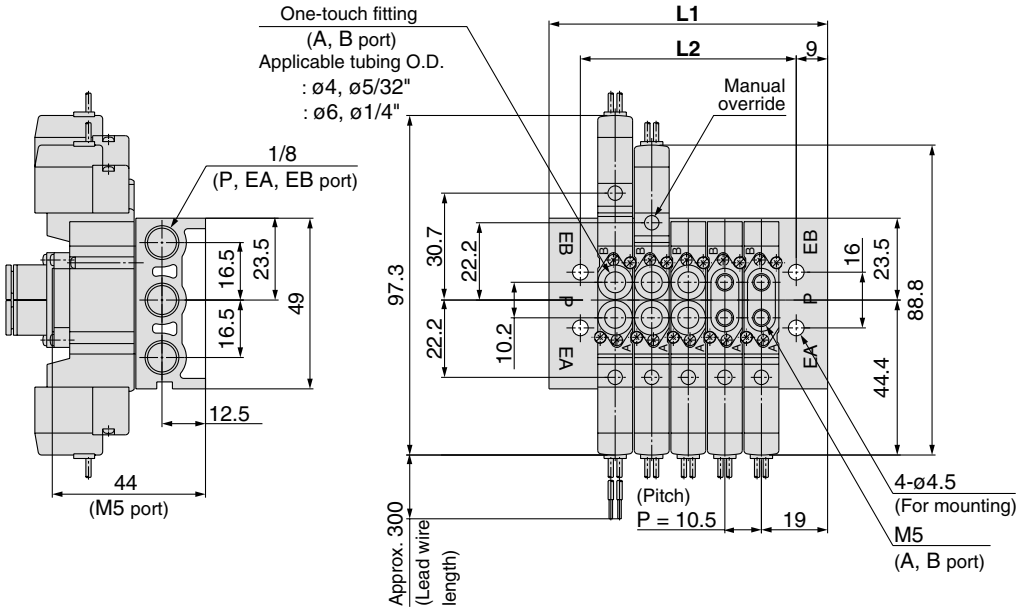

L plug connector (L)

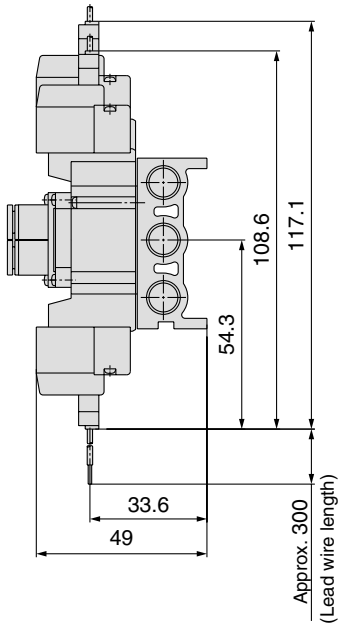

M plug connector (M)

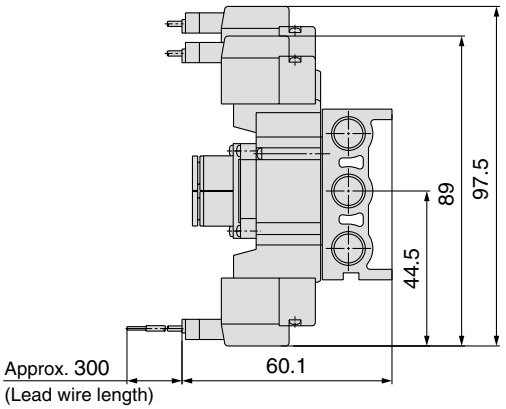

M8 connector (WO)

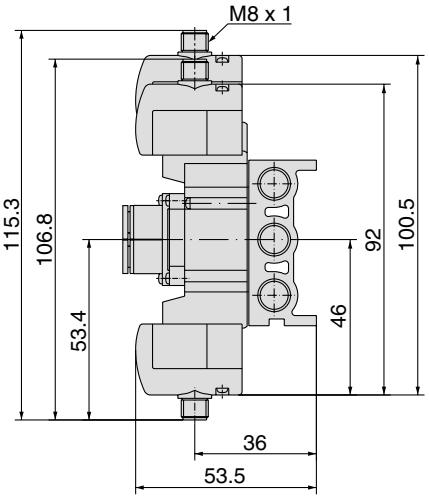

Note) Refer to back page 12 for dimensions of connector types.

Stations n	2 stations	3	4	5	6	7	8	9	10	11	12	13	14	15	16	17	18	19	20 stations
L1	48.5	59	69.5	80	90.5	101	111.5	122	132.5	143	153.5	164	174.5	185	195.5	206	216.5	227	237.5
L2	30.5	41	51.5	62	72.5	83	93.5	104	114.5	125	135.5	146	156.5	167	177.5	188	198.5	209	219.5

SY5000: SS5Y5-20-Stations-□-Q

Grommet (G)

Dimensions when mounting individual EXH spacer

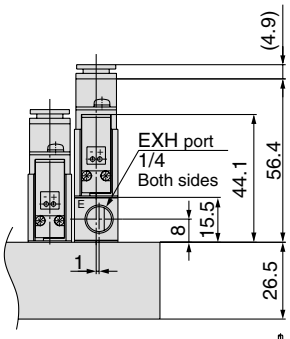

Dimensions when mounting individual SUP spacer

(SUP port is at the end plate of single solenoid.)

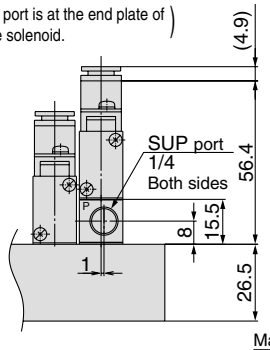

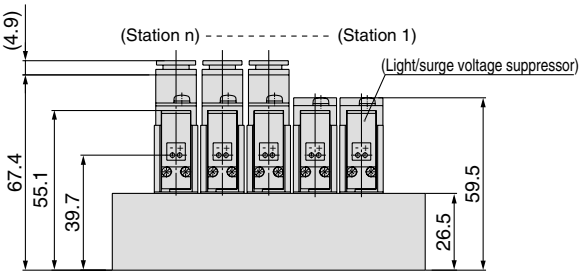

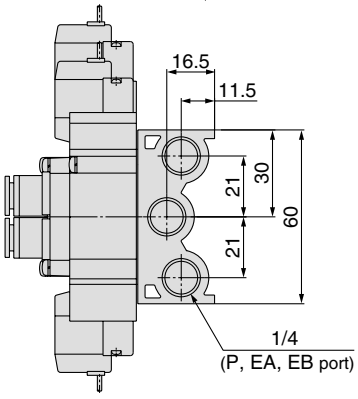

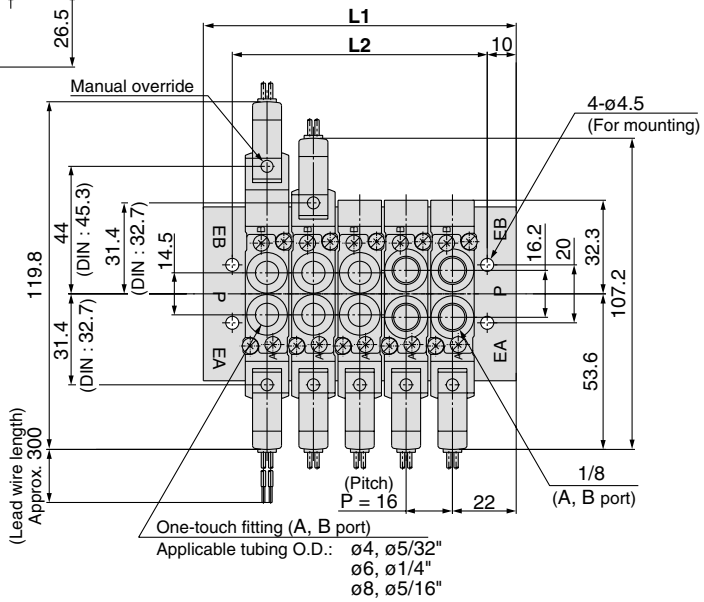

L plug connector (L)

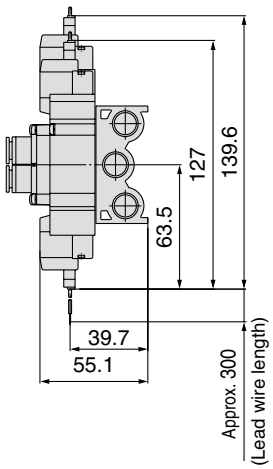

M plug connector (M)

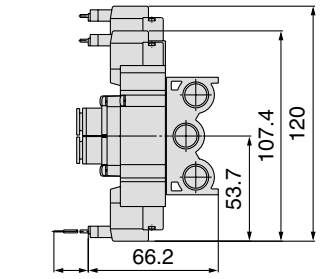

DIN terminal (D)

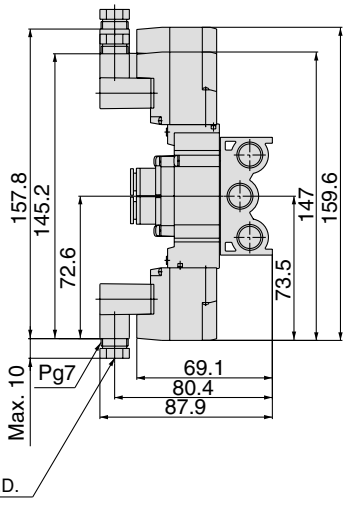

M8 connector (WO)

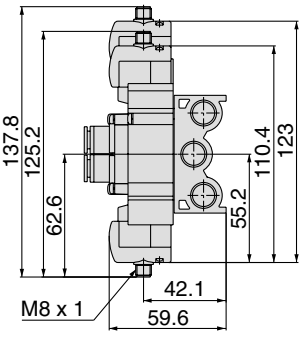

Note) Refer to back page 12 for dimensions of connector types.

Stations n	2 stations	3	4	5	6	7	8	9	10	11	12	13	14	15	16	17	18	19	20 stations
L1	60	76	92	108	124	140	156	172	188	204	220	236	252	268	284	300	316	332	348
L2	40	56	72	88	104	120	136	152	168	184	200	216	232	248	264	280	296	312	328

SY7000: SS5Y7-20-Stations-□-Q

Grommet (G)

Dimensions when mounting individual EXH spacer

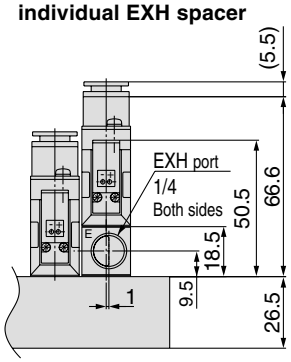

Dimensions when mounting individual SUP spacer

(SUP port is at the end plate of single solenoid.)

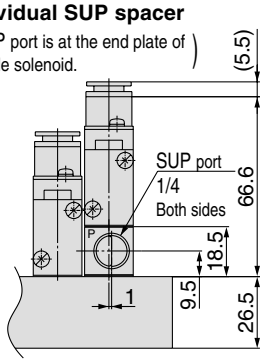

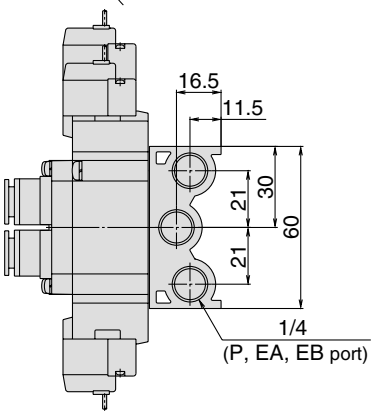

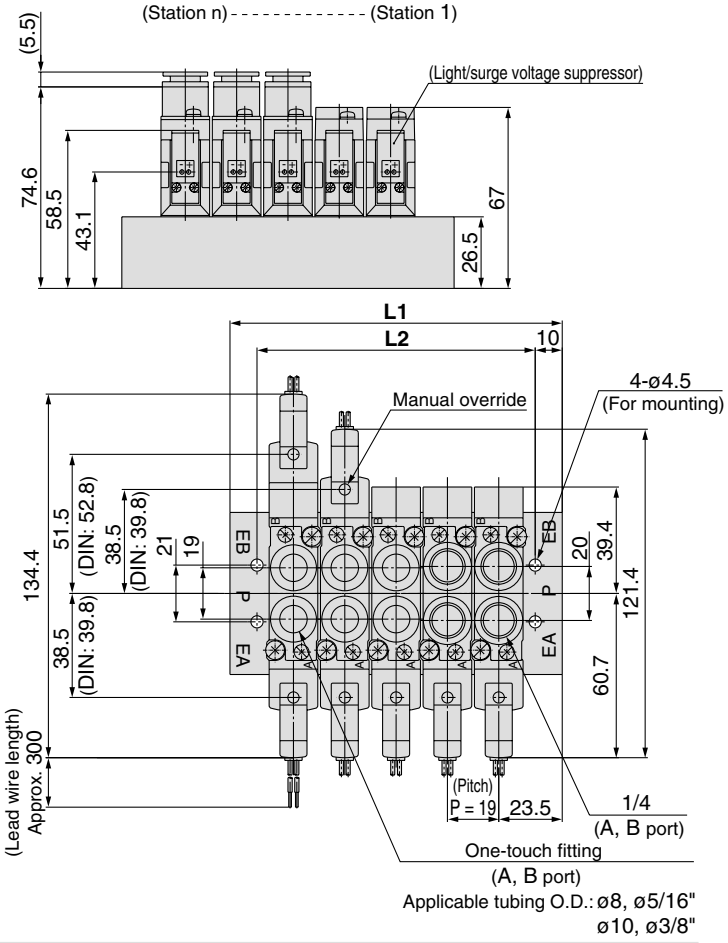

L plug connector (L)

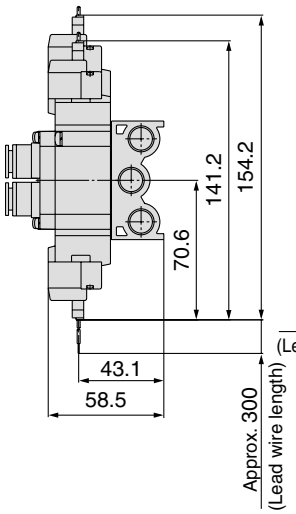

M plug connector (M)

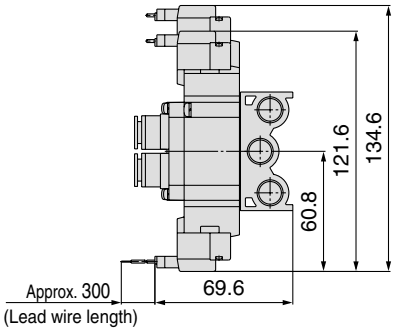

DIN terminal (D)

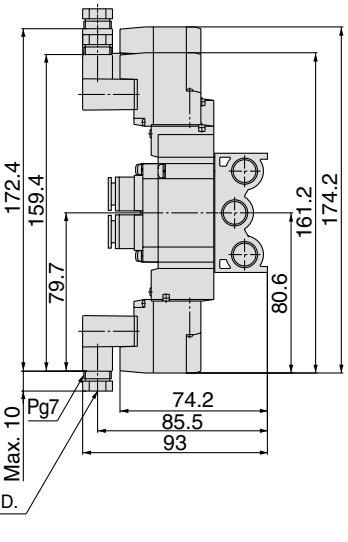

M8 connector (WO)

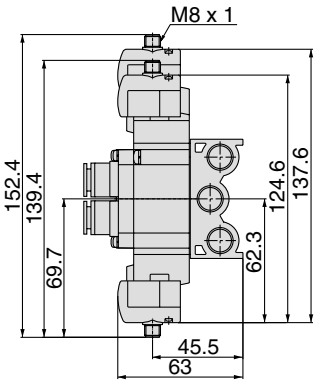

Note) Refer to back page 12 for dimensions of connector types.

Stations n	2 stations	3	4	5	6	7	8	9	10	11	12	13	14	15	16	17	18	19	20 stations
L1	66	85	104	123	142	161	180	199	218	237	256	275	294	313	332	351	370	389	408
L2	46	65	84	103	122	141	160	179	198	217	236	255	274	293	312	331	350	369	388

Type 23

5 Port Solenoid Valve
Series SY9000
Body Ported
Stacking Type/Individual Wiring

How to Order Manifold

SS5Y 9 — 23 — 05 — [ ] — [ ] -Q

Manifold series

9	SY9000

Thread type

-	Rc
00F	G
00N	NPT
00T	NPTF

Valve stations

Symbol	Stations
02	2 stations
⋮	⋮
20	20 stations

∗ This also includes the number of blanking plate assemblies.

Option

Symbol	Mounting
-	Direct mounting
D	DIN rail mounting (with DIN rail)
D0	DIN rail mounting (without DIN rail)
D∗	When a longer DIN rail is desired than the specified stations, specify the station number to be required into ∗ mark.

∗ Type 23 manifold of Series SY9000 is concurrently used for the internal and external pilot.

How to Order Valve Manifold Assembly (Example)

Example

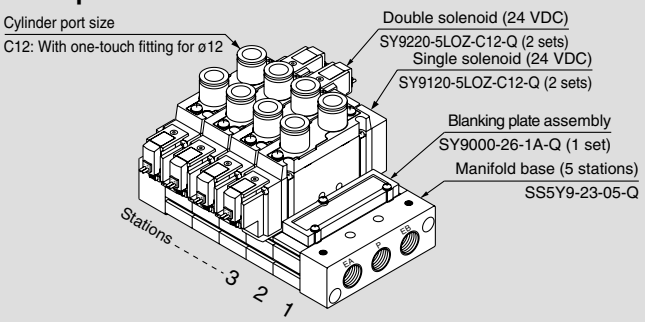

SS5Y9-23-05-Q **1 set (Type 23, 5 station manifold base part no.)**
∗ SY9000-26-1A-Q **1 set (Blanking plate assembly part no.)**
∗ SY9120-5LOZ-C12-Q **2 sets (Single solenoid part no.)**
∗ SY9220-5LOZ-C12-Q **2 sets (Double solenoid part no.)**

→ The asterisk denotes the symbol for assembly.
Prefix it to the part nos. of the solenoid valve, etc.

Add the valve and option part number under the manifold base part number. In the case of complex arrangement, specify them on the manifold specification sheet.

How to Order Valve

SY 9 1 20 ☐ ☐ – 5 L ☐ ☐ – 02 ☐ -Q

Series

9	SY9000

Type of actuation

1	2 position single
2	2 position double
3	3 position closed center
4	3 position exhaust center
5	3 position pressure center

Pilot specifications

-	Internal pilot
R	External pilot

∗ In the case of external pilot specifications, it cannot be used as a single unit.

Coil specifications

-	Standard
T	With power saving circuit (24 VDC, 12 VDC only)

∗ Power saving circuit is not available in the case of D, DO or W☐ type.

Rated voltage

For DC

5	24 VDC
6	12 VDC
V	6 VDC
S	5 VDC
R	3 VDC

For AC (50/60 Hz)

1	100 VAC
2	200 VAC
3	110 VAC [115 VAC]
4	220 VAC [230 VAC]

∗ DC specifications of type D and DO is only available with 12 and 24 VDC.
∗ AC specification is only available with D and DO type.

Manual override

-	Non-locking push type
D	Push-turn locking slotted type
E	Push-turn locking lever type

Light/surge voltage suppressor

Electrical entry for G, H, L, M, W

-	Without light/surge voltage suppressor
S	With surge voltage suppressor
Z	With light/surge voltage suppressor
R	With surge voltage suppressor (Non-polar type)
U	With light/surge voltage suppressor (Non-polar type)

∗ Power saving circuit is only available in the "Z" type.

Electrical entry for D

-	Without light/surge voltage suppressor
S	With surge voltage suppressor
Z	With light/surge voltage suppressor

∗ DOZ is not available.
∗ For AC voltage valves there is no "S" option. It is already built-in to the rectifier circuit.

Thread type

Nil	Rc
F	G
N	NPT
T	NPTF

A, B port size

Thread piping

Symbol	Port size
02	1/4
03	3/8

One-touch fitting (Metric size)

Symbol	Port size
C8	One-touch fitting for ø8
C10	One-touch fitting for ø10
C12	One-touch fitting for ø12

One-touch fitting (Inch size)

Symbol	Port size
N9	One-touch fitting for ø5/16"
N11	One-touch fitting for ø3/8"

Electrical entry

24, 12, 6, 5, 3 VDC			24, 12 VDC/ 100, 110, 200, 220 VAC	24, 12, 6, 5, 3 VDC
Grommet	**L plug connector**	**M plug connector**	**DIN terminal**	**M8 connector** ∗
G: Lead wire length 300 mm **H**: Lead wire length 600 mm	**L**: With lead wire (Length 300 mm) **LN**: Without lead wire **LO**: Without connector	**M**: With lead wire (Length 300 mm) **MN**: Without lead wire **MO**: Without connector	**D**: With connector **DO**: Without connector	**WO**: Without connector cable **W☐**: With connector cable Note 1)

∗ LN, MN type: with 2 sockets.
∗ DIN terminal type "Y" which conforms to EN-175301-803C (former DIN43650C) is also available. For details, refer to page 210.
∗ For connector cable of M8 connector, refer to back page 12.
∗ Connector M8 type "WA" conforming to IEC 60947-5-2 standard, is also available. For details, see page 211.

Note 1) Enter the cable length symbols in ☐. Please be sure to fill in the blank referring to back page 13.

Note) When placing an order for body ported solenoid valve as a single unit, mounting bolt for manifold and gasket are not attached. Order them separately, if necessary.
For details, refer to page 56.

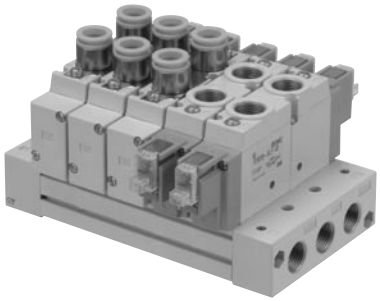

Manifold Specifications

Model		SS5Y9-23
Applicable valve		SY9□20
Manifold type		Stacking type
P (SUP)/R (EXH)		Common SUP, Common EXH
Valve stations		2 to 20 stations Note1)
A, B port location		Valve
Port size	P, EA, EB port	3/8
	A, B port	1/4 3/8 C8 (One-touch fitting for ø8) C10 (One-touch fitting for ø10) C12 (One-touch fitting for ø12)
Manifold base weight W (g) n: Stations		W = 66n + 246

Note 1) For more than 10 stations, supply pressure to P port on both sides and exhaust from EA/EB port on both sides.

Note 2) Refer to “Manifold Option” on page 56.

Flow Characteristics

Model	Port size		Flow characteristics							
	1, 5, 3	4, 2	1→4/2 (P→A/B)				4/2→5/3 (A/B→EA/EB)			
	(P, EA, EB)	(A, B)	C (dm³/(s·bar))	b	Cv	Q[ℓ/min/ANR)]*	C (dm³/(s·bar))	b	Cv	Q[ℓ/min/ANR)]*
SS5Y9-23	3/8	C12	6.3	0.20	1.5	1509	8.2	0.28	1.9	2059

Note) The value is for manifold base with 5 stations and individually operated 2 position type.

* These values have been calculated according to ISO6358 and represent the flow rate measured in standard conditions at an upstream pressure of 0.6 MPa (relative pressure) and a differential pressure of 0.1MPa.

SY9000: SS5Y9-23-Stations-(D)-□(D)-Q

Grommet (G)

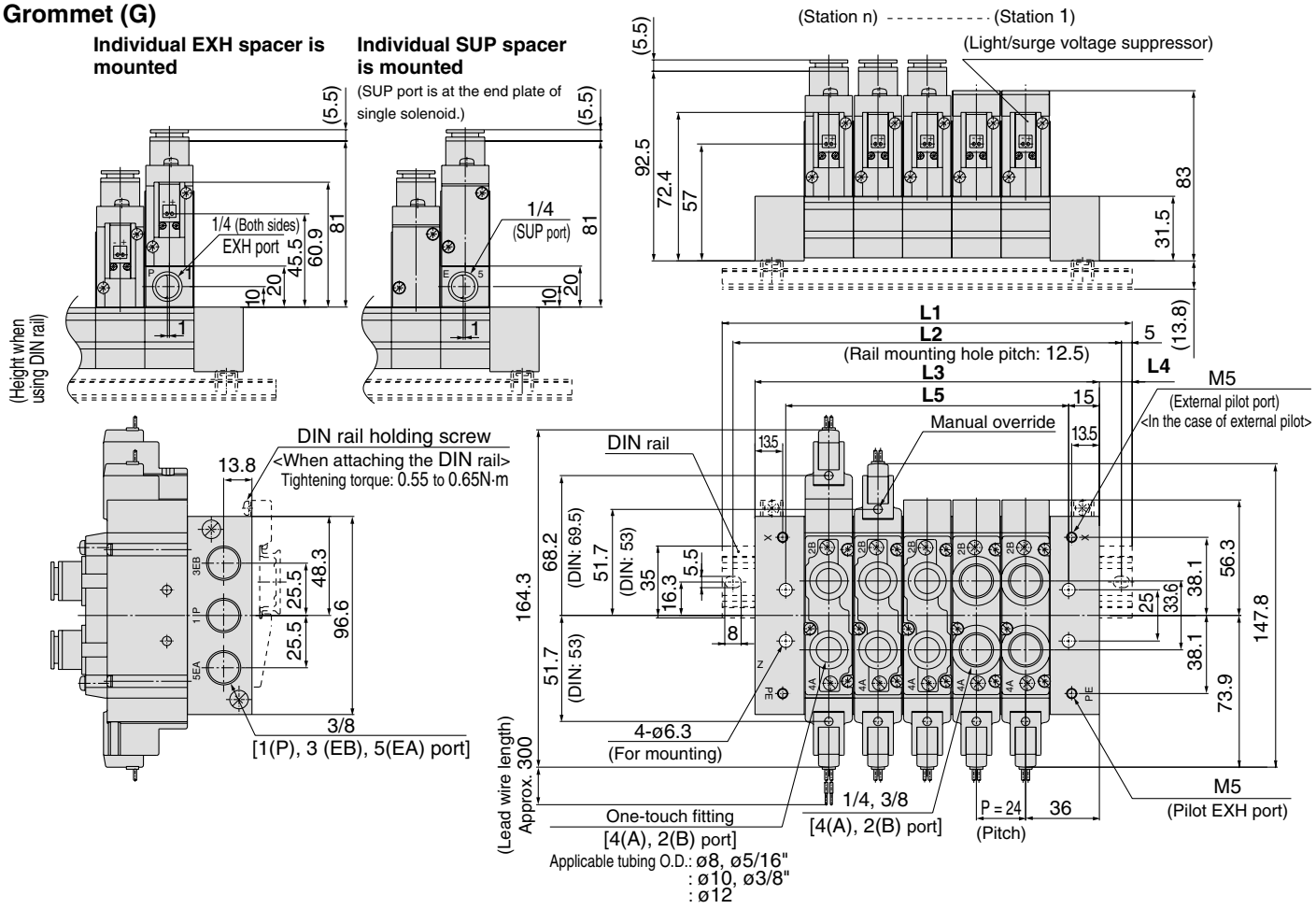

L plug connector (L)

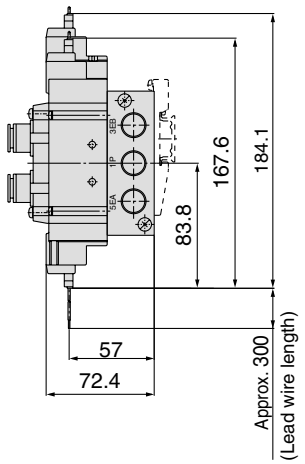

M plug connector (M)

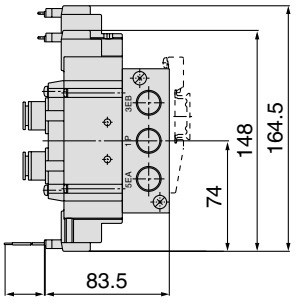

DIN terminal (D)

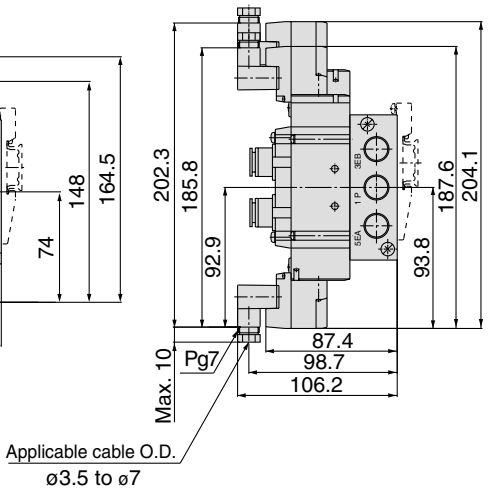

M8 connector (WO)

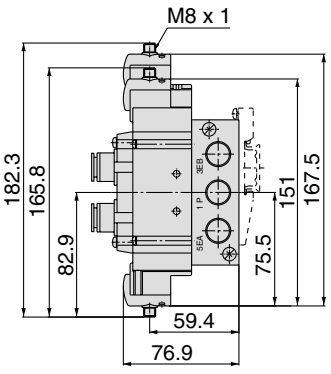

Note) Refer to back page 12 for dimensions of connector types.

Stations n	2 stations	3	4	5	6	7	8	9	10	11	12	13	14	15	16	17	18	19	20 stations
L1	123	148	173	198	223	248	273	298	323	335.5	360.5	385.5	410.5	435.5	460.5	485.5	510.5	535.5	560.5
L2	112.5	137.5	162.5	187.5	212.5	237.5	262.5	287.5	312.5	325	350	375	400	425	450	475	500	525	550
L3	96	120	144	168	192	216	240	264	288	312	336	360	384	408	432	456	480	504	528
L4	13.5	14	14.5	15	15.5	16	16.5	17	17.5	12	12.5	13	13.5	14	14.5	15	15.5	16	16.5
L5	66	90	114	138	162	186	210	234	258	282	306	330	354	378	402	426	450	474	498

Note) In the case of direct mounting without DIN rail, total width of manifold is **L3**.

Type 20P

5 Port Solenoid Valve
Series SY3000/5000/7000
Body Ported
Bar Stock Type/Flat Ribbon Cable

How to Order Manifold

SS5Y [5] — 20P — [05] — [ ] -Q

Manifold series

3	SY3000
5	SY5000
7	SY7000

Thread type

-	Rc
00F	G
00N	NPT
00T	NPTF

Stations

03	3 stations
⋮	⋮
12	12 stations

Note) SS5Y3 has 4 to 12 stations.

How to Order Valve Manifold Assembly (Example)

Example

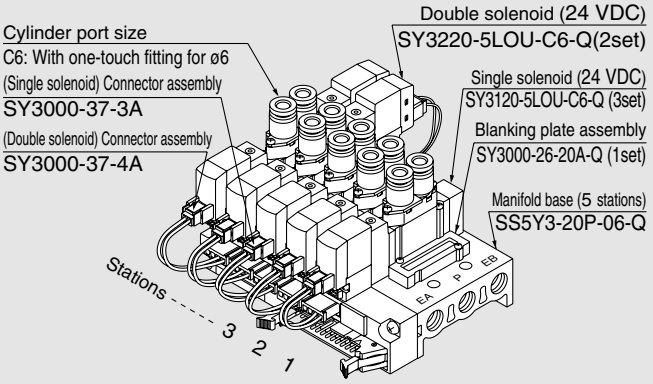

SS5Y3-20P-06-Q	**1 set (Type 20P, 6 station manifold part no.)**
***SY3000-26-20A-Q**	**1 set (Blanking plate assembly part no)**
***SY3120-5LOU-C6-Q**	**3 sets (Single solenoid part no.)**
***SY3220-5LOU-C6-Q**	**2 sets (Double solenoid part no.)**
***SY3000-37-3A**	**3 sets (Connector assembly part no.)**
***SY3000-37-4A**	**2 sets (Connector assembly part no.)**

*The asterisk denotes the symbol for assembly.
Prefix it to the part nos. of the solenoid valve, etc.

Add the valve and option part number under the manifold base part number. In the case of complex arrangement, specify them on the manifold specification sheet.

How to Order Valve

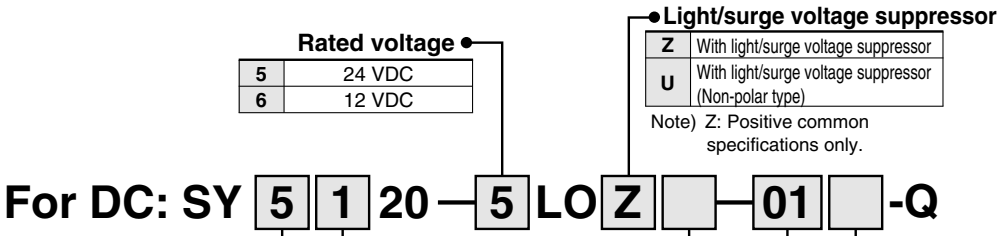

Rated voltage

5	24 VDC
6	12 VDC

Light/surge voltage suppressor

Z	With light/surge voltage suppressor
U	With light/surge voltage suppressor (Non-polar type)

Note) Z: Positive common specifications only.

Series

3	SY3000
5	SY5000
7	SY7000

Type of actuation

1	2 position single
2	2 position double
3	3 position closed center
4	3 position exhaust center
5	3 position pressure center

Manual override

-	Non-locking push type
D	Push-turn locking slotted type
E	Push-turn locking lever type

A, B port size

Thread piping

Symbol	Port size	Applicable series
M5	M5	SY3000
01	1/8	SY5000
02	1/4	SY7000

One-touch fitting (Metric size)

Symbol	Port size	Applicable series
C4	One-touch fitting for ø4	SY3000
C6	One-touch fitting for ø6	
C4	One-touch fitting for ø4	SY5000
C6	One-touch fitting for ø6	
C8	One-touch fitting for ø8	
C8	One-touch fitting for ø8	SY7000
C10	One-touch fitting for ø10	

One-touch fitting (Inch size)

Symbol	Port size	Applicable series
N3	One-touch fitting for ø5/32"	SY3000
N7	One-touch fitting for ø1/4"	
N3	One-touch fitting for ø5/32"	SY5000
N7	One-touch fitting for ø1/4"	
N9	One-touch fitting for ø5/16"	
N9	One-touch fitting for ø5/16"	SY7000
N11	One-touch fitting for ø3/8"	

Thread type

-	Rc
F	G
N	NPT
T	NPTF

∗ Except for M5

Note) When placing an order for body ported solenoid valve as a single unit, mounting bolt for manifold and gasket are not attached. Order them separately, if necessary.
(For details, refer to page 56.)

- **Multiple valve wiring is simplified through the use of the flat cable connector**
- **Clean appearance**

In the case of a flat ribbon cable type, each valve is wired on the print board of manifold base to allow the external wiring to be piped all together with 26 pins MIL connector.

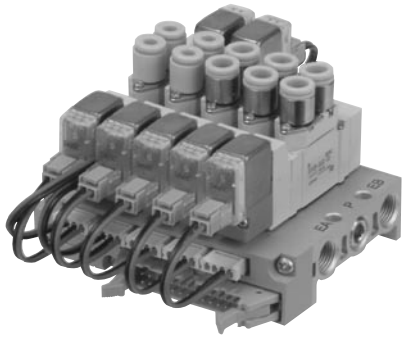

Manifold Specifications

Model		SS5Y3-20P	SS5Y5-20P	SS5Y7-20P
Applicable valve		SY3□20	SY5□20	SY7□20
Manifold type		Single base/B mount		
P (SUP)/R (EXH)		Common SUP, Common EXH		
Valve stations		4 to 12 stations(1)	3 to 12 stations Note 1)	
A, B port location		Valve		
Port size	P, EA, EB port	1/8	1/4	1/4
	A, B port	M5, C4 (One-touch fitting for ø4) C6 (One-touch fitting for ø6)	1/8 C4 (One-touch fitting for ø4) C6 (One-touch fitting for ø6) C8 (One-touch fitting for ø8)	1/4 C8 (One-touch fitting for ø8) C10 (One-touch fitting for ø10)
Manifold base weight W (g) n: Stations		W = 19n + 45	W = 43n + 77	W = 51n + 81
Applicable flat ribbon cable connector		Flat ribbon cable connector, Socket: 26 pins MIL type with strain relief, Conforming to MIL-C-83503		
Internal wiring		In common between +COM and –COM (Z type: +COM only).		
Rated voltage		12, 24 VDC		

Note 1) For more than 10 stations (more than 5 stations in case of SS5Y7), supply pressure to P port on both sides and exhaust from EA/EB port on both sides.
Note 2) The withstand voltage specification for the wiring unit section is JIS C 0704, Grade 1 or its equivalent.
Note 3) Refer to "Manifold Option" on page 56.

Flow Characteristics

Model	Port size		Flow characteristics							
	1, 5, 3 (P, EA, EB)	4, 2 (A, B)	1 → 4/2 (P → A/B)				4/2 → 5/3 (A/B → EA/EB)			
			C [dm³/(s·bar)]	b	Cv	Q[ℓ/min(ANR)]*	C [dm³/(s·bar)]	b	Cv	Q[ℓ/min(ANR)]*
SS5Y3-20P	1/8	C6	0.72	0.29	0.18	182	0.80	0.36	0.21	212
SS5Y5-20P	1/4	C8	1.9	0.28	0.48	477	2.2	0.20	0.53	527
SS5Y7-20P	1/4	C10	3.6	0.31	0.93	921	3.6	0.27	0.88	898

Note) The value is for manifold base with 5 stations and individually operated 2 position type.
* These values have been calculated according to ISO6358 and represent the flow rate measured in standard conditions at an upstream pressure of 0.6 MPa (relative pressure) and a differential pressure of 0.1MPa.

How to Order Connector Assembly

For 12, 24 VDC

For DC	For SY3000	For SY5000/7000
For single solenoid:	SY3000-37-3A	SY5000-37-3A
Double solenoid, 3 position type	SY3000-37-4A	SY5000-37-4A
Single with spacer assembly	SY5000-37-3A	SY5000-37-5A
Double, 3 position with spacer assembly	SY3000-37-6A	SY5000-37-6A

⚠Caution

- For non-polar (U) valves, the electrical DC connections can be used with either positive and negative COM. For type (Z), only use with positive COM as the valve does not operate correctly when used with negative COM.

Internal Wiring of Manifold (Non-polar type)

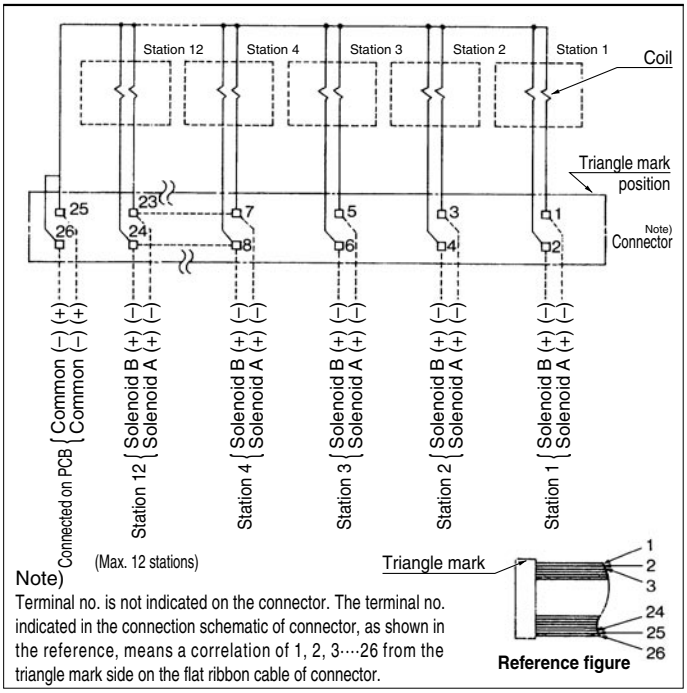

Note)
Terminal no. is not indicated on the connector. The terminal no. indicated in the connection schematic of connector, as shown in the reference, means a correlation of 1, 2, 3····26 from the triangle mark side on the flat ribbon cable of connector.

- For more than 10 stations, both poles of the common should be wired.
- For single solenoid, connect to the solenoid A side.
- The maximum number of stations that can be accommodated is 12. For more stations, please contact SMC.

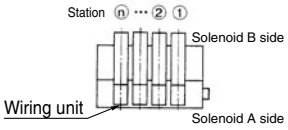

SY3000: SS5Y3-20P-Stations -□-Q

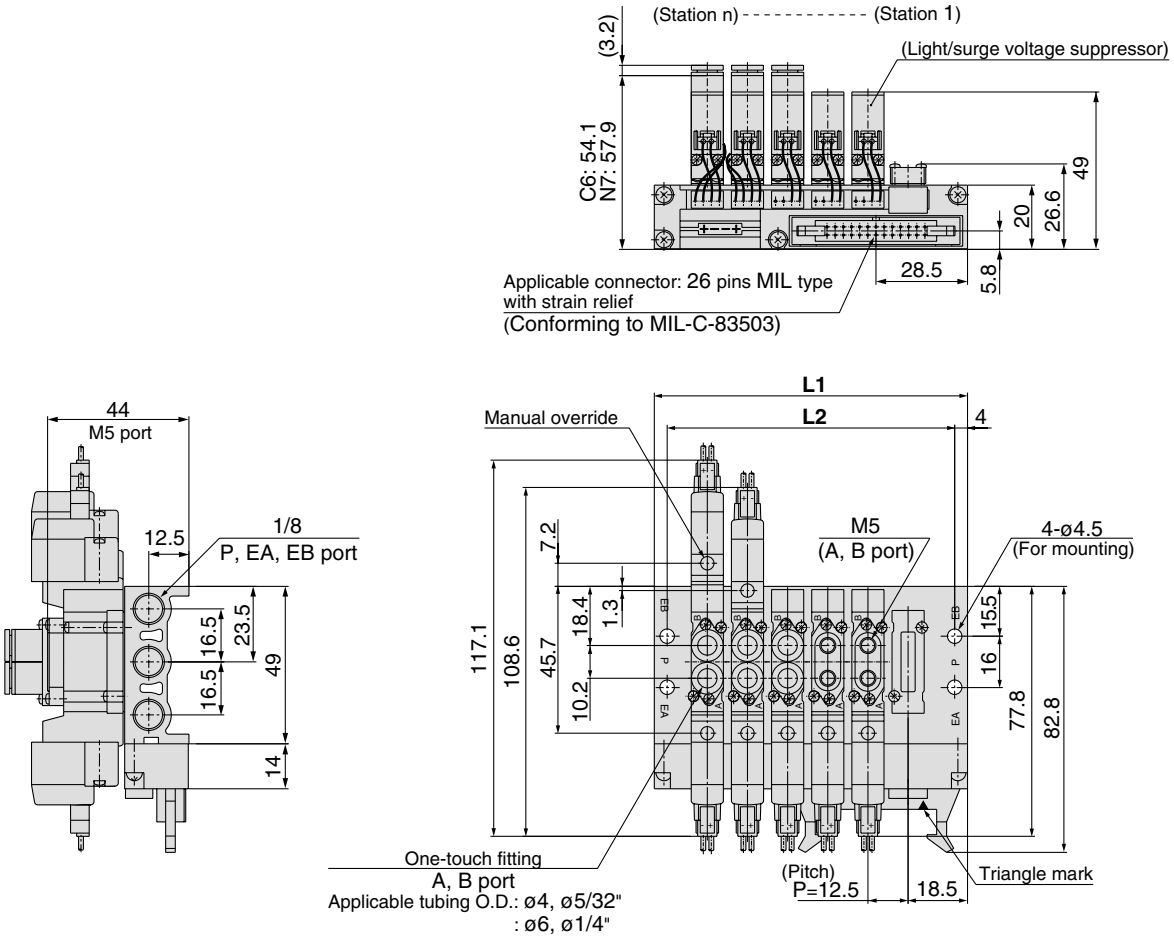

Stations n	4	5	6	7	8	9	10	11	12
L1	72.5	85	97.5	110	122.5	135	147.5	160	172.5
L2	64.5	77	89.5	102	114.5	127	139.5	152	164.5

SY5000: SS5Y5-20P-Stations-□-Q

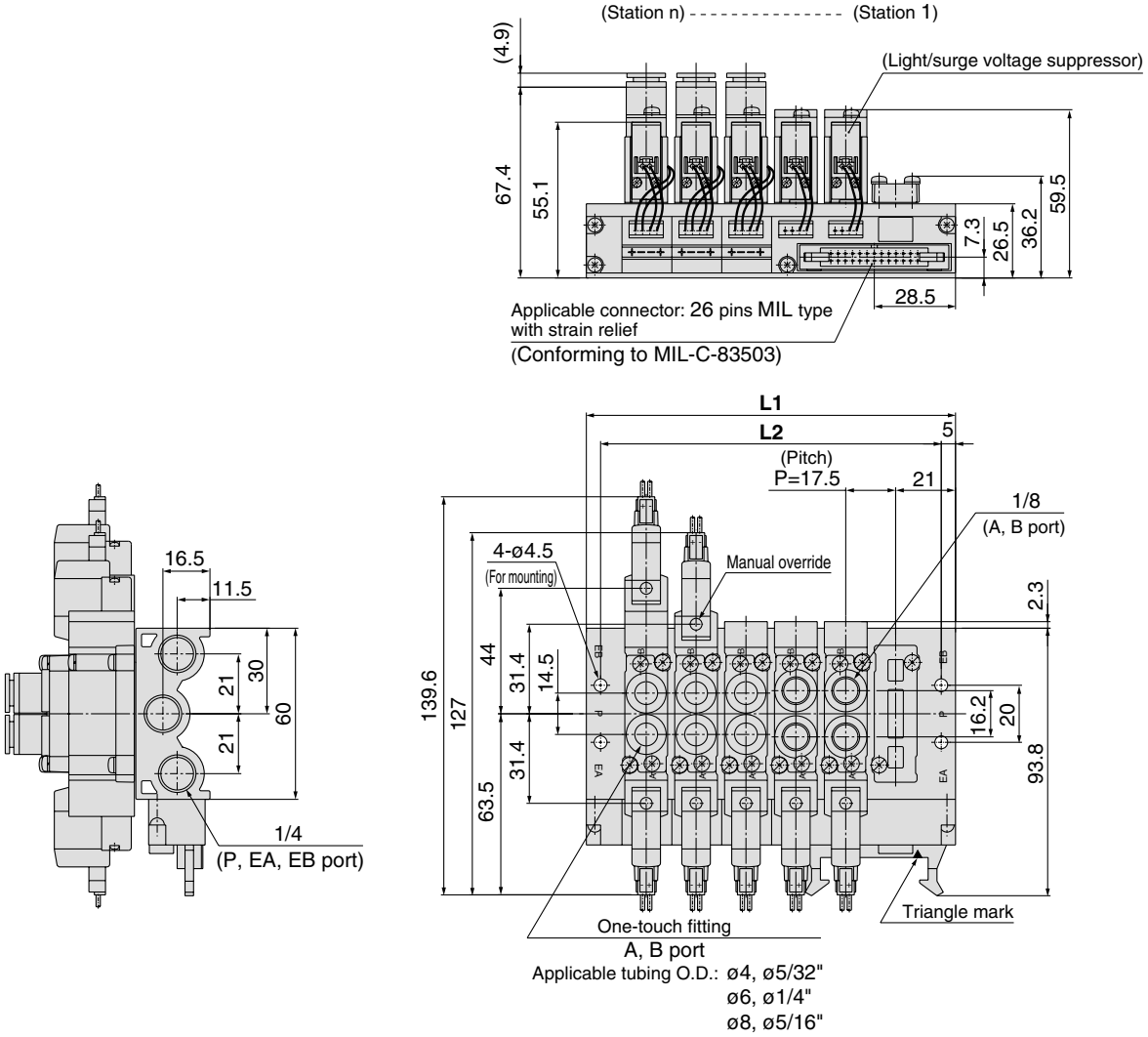

Stations n	3	4	5	6	7	8	9	10	11	12
L1	77	94.5	112	129.5	147	164.5	182	199.5	217	234.5
L2	67	84.5	102	119.5	137	154.5	172	189.5	207	224.5

SY7000: SS5Y7-20P-Stations-□-Q

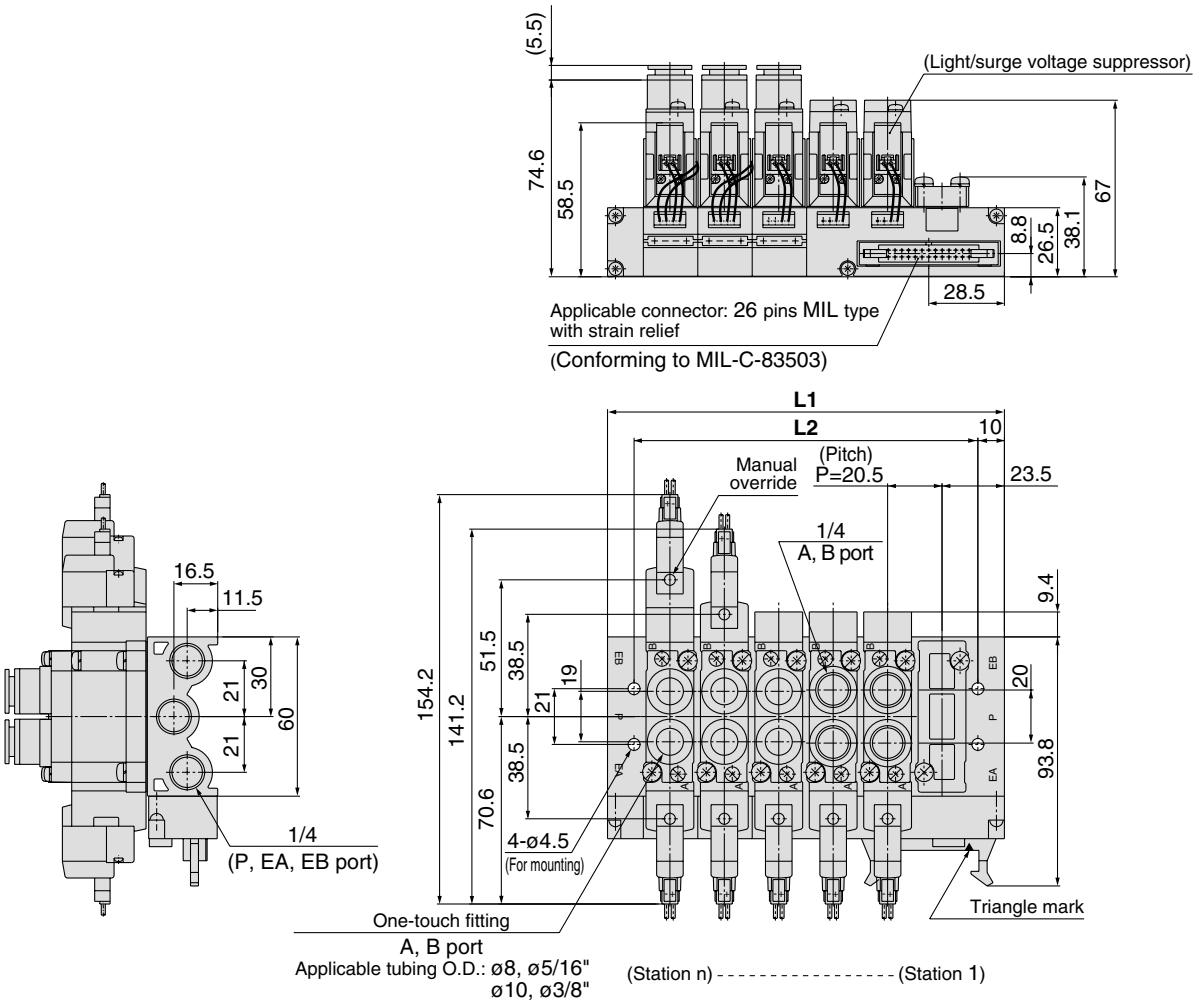

Stations n	3	4	5	6	7	8	9	10	11	12
L1	88	108.5	129	149.5	170	190.5	211	231.5	252	272.5
L2	68	88.5	109	129.5	150	170.5	191	211.5	232	252.5

Type 23P

5 Port Solenoid Valve
Series SY9000
Body Ported
Stacking Type/Flat Ribbon Cable

How to Order Manifold

SS5Y 9 — 23P — 05 — [ ] — [ ] -Q

Manifold series

9	SY9000

Thread type

-	Rc
00F	G
00N	NPT
00T	NPTF

Valve stations

Symbol	Stations
04	4 stations
⋮	⋮
12	12 stations

∗ This also includes the number of blanking plate assemblies.

Option

Symbol	Mounting
-	Direct mounting
D	DIN rail mounting (with DIN rail)
D0	DIN rail mounting (without DIN rail)
D ∗	When a longer DIN rail is desired than the specified stations, specify the station number to be required into ∗ mark.

∗ Type 23P manifold of Series SY9000 is concurrently used for the internal and external pilot.

How to Order Valve Manifold Assembly (Example)

Example

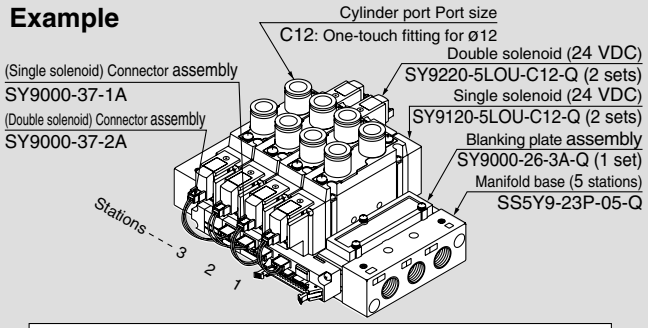

SS5Y9-23P-05-Q	**1 set (Type 23, 5 station manifold base part no.)**
∗SY9000-26-3A-Q	**1 set (Blanking plate assembly part no.)**
∗SY9120-5LOU-C12-Q	**2 sets (Single solenoid part no.)**
∗SY9220-5LOU-C12-Q	**2 sets (Double solenoid part no.)**
∗SY9000-37-1A	**2 sets (Connector assembly part no.)**
∗SY9000-37-2A	**2 sets (Connector assembly part no.)**

→ The asterisk denotes the symbol for assembly. Prefix it to the part nos. of the solenoid valve, etc.

Add the valve and option part number under the manifold base part number. In the case of complex arrangement, specify them on the manifold specification sheet.

How to Order Valve

For DC: SY 9 [1] 20 [ ] — [5] LO [Z] [ ] — [02] [ ] -Q

Light/surge voltage suppressor

Z	With light/surge voltage suppressor
U	With light/surge voltage suppressor (Non-polar type)

Note) Z: Positive common specifications only.

Rated voltage

5	24 VDC
6	12 VDC

Thread type

-	Rc
F	G
N	NPT
T	NPTF

Series

9	SY9000

Type of actuation

1	2 position single
2	2 position double
3	3 position closed center
4	3 position exhaust center
5	3 position pressure center

Pilot specifications

-	Internal pilot
R	External pilot

∗ Type 23P manifolds can be used for both internal and external pilots.

A, B port size

Thread piping

Symbol	Port size
02	1/4
03	3/8

One-touch fitting (Metric size)

Symbol	Port size
C8	One-touch fitting for ø8
C10	One-touch fitting for ø10
C12	One-touch fitting for ø12

One-touch fitting (Inch size)

Symbol	Port size
N9	One-touch fitting for ø5/16"
N11	One-touch fitting for ø3/8"

Manual override

-	Non-locking push type
D	Push-turn locking slotted type
E	Push-turn locking lever type

Note) When placing an order for body ported solenoid valve as a single unit, mounting bolt for manifold and gasket are not attached. Order them separately, if necessary. (For details, refer to page 56.)

SMC

- **Multiple valve wiring is simplified through the use of the flat cable connector.**
- **Clean appearance**

In the case of a flat ribbon cable type, each valve is wired on the print board of manifold base to allow the external wiring to be piped all together with 26 pins MIL connector.

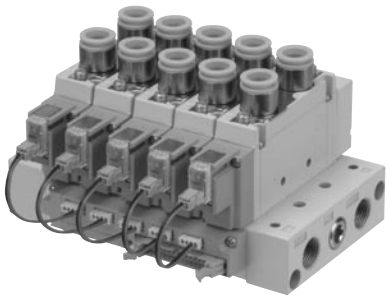

Manifold Specifications

Model		SS5Y9-23P
Applicable valve		SY9□20
Manifold type		Stacking type
P (SUP)/R (EXH)		Common SUP, Common EXH
Valve stations		4 to 12 stations Note1)
A, B port location		Valve
Port size	P, EA, EB port	3/8
	A, B port	1/4 3/8 C8 (One-touch fitting for ø8) C10 (One-touch fitting for ø10) C12 (One-touch fitting for ø12)
Manifold base weight W (g) n: Stations		W = 73n + 259
Applicable flat ribbon cable connector		Flat ribbon cable connector, Socket: 26 pins MIL with strain relief, Conforming to MIL-C-83503
Internal wiring		In common between +COM and –COM (Z type: +COM only)
Rated voltage		12, 24 VDC

Note 1) For more than 10 stations, supply pressure to P port on both sides and exhaust from EA/EB port on both sides.
Note 2) The withstand voltage specification for the wiring unit section is JIS C 0704, Grade 1 or its equivalent.
Note 3) Refer to "Manifold Option" on page 56.

How to Order Connector Assembly

For 12, 24 VDC

Specifications	For SY9000
For single solenoid	SY9000-37-1A
Double solenoid 3 position	SY9000-37-2A
Single with spacer assembly	SY9000-37-3A
Double, 3 position with spacer assembly	SY9000-37-4A

Flow Characteristics

Model	Port size		Flow characteristics							
	1,5,3 (P,EA,EB)	4,2 (A,B)	1 → 4/2 (P → A/B)				4/2 → 5/3 (A/B → EA/EB)			
			C (dm³/(s·bar))	b	Cv	Q[ℓ/min(ANR)]*	C (dm³/(s·bar))	b	Cv	Q[ℓ/min(ANR)]*
SS5Y9-23P	3/8	C12	6.3	0.20	1.5	1509	8.2	0.28	1.9	2059

Note) The value is for manifold base with 5 stations and individually operated 2 position type.
* These values have been calculated according to ISO6358 and represent the flow rate measured in standard conditions at an upstream pressure of 0.6 MPa (relative pressure) and a differential pressure of 0.1MPa.

Internal Wiring of Manifold (Non-polar type)

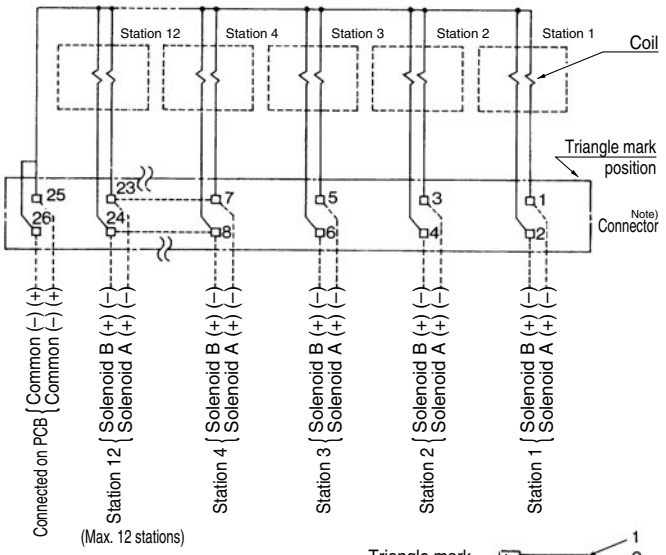

Note)
Terminal no. is not indicated on the connector. The terminal no. indicated in the connection schematic of connector, as shown in the reference, means a correlation of 1, 2, 3····26 from the triangle mark side on the flat ribbon cable of connector.

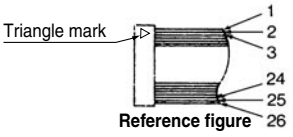

Reference figure

- For more than 10 stations, both poles of the common should be wired.
- For single solenoid, connect to the solenoid A side.
- The maximum number of stations that can be accommodated is 12. For more stations, please contact SMC.

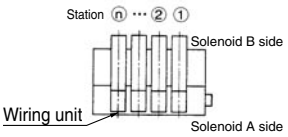

⚠Caution

- For non-polar (U) valves, the electrical DC connections can be used with either positive and negative COM. For type (Z), only use with positive COM as the valve does not operate correctly when used with negative COM.

SY9000: SS5Y9-23P-Stations-□-(D)-Q

Grommet (G)

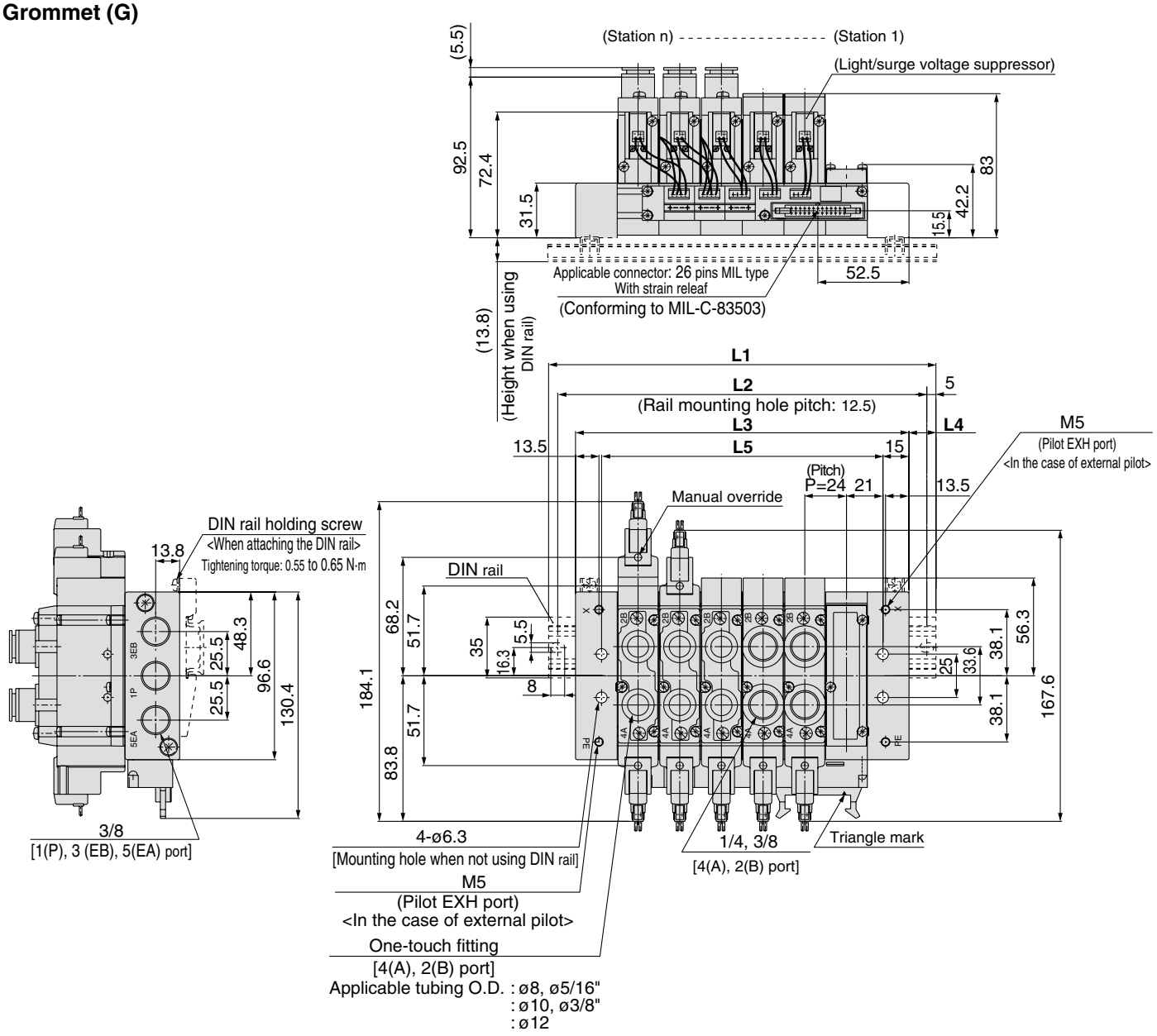

Stations n	4 stations	5	6	7	8	9	10	11	12 stations
L1	173	198	223	248	273	298	323	335.5	360.5
L2	162.5	187.5	212.5	237.5	262.5	287.5	312.5	325	350
L3	144	168	192	216	240	264	288	312	336
L4	14.5	15	15.5	16	16.5	17	17.5	12	12.5
L5	114	138	162	186	210	234	258	282	306

Note) In the case of direct mounting without DIN rail, total width of manifold is L3.

Manifold Option

■ Type 20, 23 Blanking plate assembly

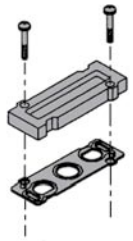

Series	Assembly part no.
SY3000	SY3000-26-19A-Q
SY5000	SY5000-26-1A-Q
SY7000	SY7000-26-1A-Q
SY9000	SY9000-26-1A-Q

■ Type 20P, 23P Blanking plate assembly

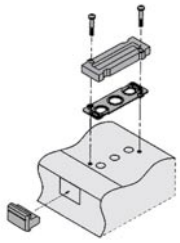

Series	Assembly part no.
SY3000	SY3000-26-20A-Q
SY5000	SY5000-26-3A-Q
SY7000	SY7000-26-3A-Q
SY9000	SY9000-26-3A

■ Gasket assembly part no.

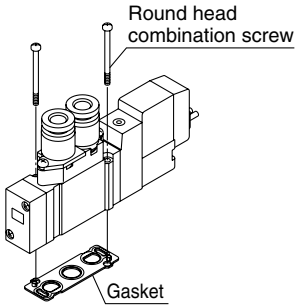

Series	Gasket assembly
SY3000	SY3000-GS-1
SY5000	SY5000-GS-1
SY7000	SY7000-GS-1
SY9000	SY9000-GS-1

Note) Gasket assembly consists of mounting screws and a gasket.

■ Individual SUP spacer assembly

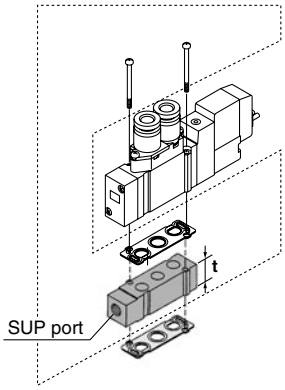

Series	Assembly part no.	Port size	t
SY3000	SY3000-38-20A-Q	M5	10.5
SY5000	SY5000-38-1∗A-Q	1/8	15
SY7000	SY7000-38-1∗A-Q	1/4	18
SY9000	SY9000-38-1∗A-Q	1/4	20

Note)
- The SUP port of SY3000/5000/7000 may be either on the lead wire side or on the end plate side. (An assembly is shipped under the conditions shown in the figure.)
- The end plate side is only available to SY9000.

■ Individual EXH spacer assembly

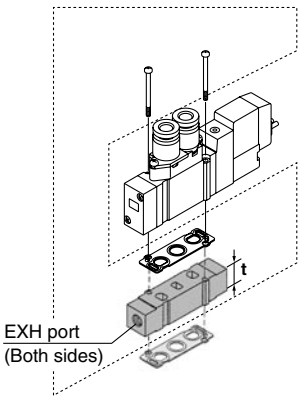

Series	Assembly part no.	Port size	t
SY3000	SY3000-39-20A-Q	M5	10.5
SY5000	SY5000-39-1∗A-Q	1/8	15
SY7000	SY7000-39-1∗A-Q	1/4	18
SY9000	SY9000-39-1∗A-Q	1/4	20

Note) In case of 20P and 23P, for protection of the wiring unit section from drainage, piping at the EA port should be arranged so that it will not be directly exposed to exhaust from the valve.

■ Individual SUP spacer assembly + Individual EXH spacer assembly (Double spacer)

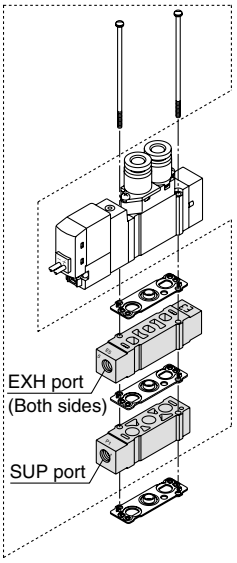

[●: Available ×: Not available]

Series	Individual SUP + Individual EXP Assemble part no.	Port size	Applicable manifold types	
			20	20P
SY3000	SY3000-120-1A-Q	M5	●	×
SY5000	SY5000-75-2∗A-Q	1/8	●	×
SY7000	SY7000-73-3∗A-Q	1/4	●	×

Note) The SUP spacer's port does not have an orientation. As for the EXH ports, adjust the symbol "5" to the pilot valve side. Also, please make sure to connect the individual ports to protect the wiring section of the pilot valve from drainage, etc. The individual SUP spacer and EXH spacer can be mounted either on the upper side or lower side. (The above illustration shows the condition when the product is shipped out from a factory already assembled.)

⚠ Caution

Mounting screw tightening torques

M2: 0.16 N·m
M3: 0.8 N·m
M4: 1.4 N·m

∗ Thread type

-	Rc
F	G
N	NPT
T	NPTF

⚠ Warning

When mounting a valve or spacer on the manifold base or sub-plate, etc., those mounting directions are determined. If mounted in the wrong direction, the equipment to be connected may cause malfunction. Refer to external dimensions, and then mount it.

Manifold Option

▪ SUP blocking disk (For SY9000)

By installing a SUP blocking disk in the pressure supply passage of a manifold valve, it is possible to supply two or more different high and low pressures to one manifold.



Series	No.
SY9000	SY9000-61-2A

▪ EXH blocking disk (For SY9000)

By installing an EXH blocking disk in the exhaust passage of a manifold valve, it is possible to divide the valve's exhaust so that it does not affect another valve. (Two blocking disks are needed to divide both exhausts.)

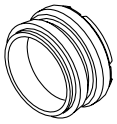

Series	No.
SY9000	SY9000-61-2A

▪ Label for blocking disk (For SY9000)

The labels shown below are used on manifold stations containing SUP/EXH blocking disk(s) to show their location. (3 pcs. each)

VZ3000-123-1A

Label for SUP block disk **Label for EXH block disk** **Label for SUP/EXH block disk**



∗ When a block disk is concurrently ordered by specifying on the manifold specification sheet, etc., a label will be stuck on the position where block disk is mounted.

▪ DIN Rail Dimensions/Weight for SY9000

VZ1000 – 11 – 4 – □

● Refer to L dimensions

∗ Fill in □ with an appropriate no. listed on the table of DIN rail dimensions shown below.

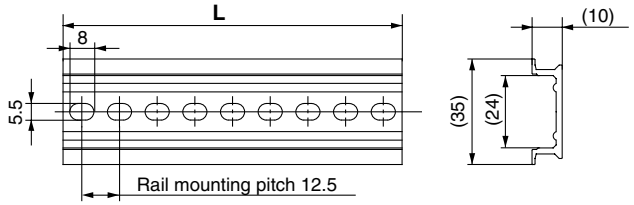

No.	0	1	2	3	4	5	6	7	8	9
L Dimension	98	110.5	123	135.5	148	160.5	173	185.5	198	210.5
Weight (g)	24.8	28	31.1	34.3	37.4	40.6	43.8	46.9	50.1	53.3
No.	10	11	12	13	14	15	16	17	18	19
L Dimension	223	235.5	248	260.5	273	285.5	298	310.5	323	335.5
Weight (g)	56.4	59.6	62.7	65.9	69.1	72.2	75.4	78.6	81.7	84.9
No.	20	21	22	23	24	25	26	27	28	29
L Dimension	348	360.5	373	385.5	398	410.5	423	435.5	448	460.5
Weight (g)	88	91.2	94.4	97.5	100.7	103.9	107	110.2	113.3	116.5

Note) · For DIN rail, refer to page 223.
· Refer to **L1** dimension on pages starting with page 55 for lengths that correspond to the number of manifold stations.

▪ Cable assembly (For 20P, 23P)

AXT100-FC26- 1 / 3

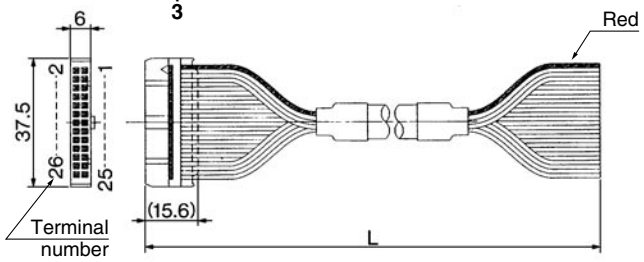

Connector Assembly for Flat Ribbon Cables

Cable length (L)	Assembly part no.	Note
1.5 m	AXT100-FC26-1	Cable 26 core x 28 AWG
3 m	AXT100-FC26-2	
5 m	AXT100-FC26-3	

∗ For other commercial connectors, use a 26 pins with strain relief conforming to MIL-C-83503.

Connector manufacturers' example

- **Hirose Electric Company**
- **Japan Aviation Electronics Industry, Ltd.**
- **Sumitomo 3M Limited**
- **J.S.T. Mfg. Co., Ltd.**
- **Fujitsu Limited**

■ Plug (white)

These are inserted in unused cylinder ports and SUP, EXH ports.
Note) Purchasing order is available in units of 10 pieces.

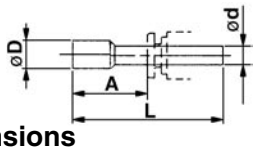

Dimensions

Applicable fittings size **ød**	Model	**A**	**L**	**D**
4	**KQ2P-04**	16	32	6
6	**KQ2P-06**	18	35	8
8	**KQ2P-08**	20.5	39	10
10	**KQ2P-10**	22	43	12
12	**KQ2P-12**	24	44.5	14
1/8"	**KQ2P-01**	16	31.5	5
5/32"	**KQ2P-03**	16	32	6
1/4"	**KQ2P-07**	18	35	8.5
5/16"	**KQ2P-09**	20.5	39	10
3/8"	**KQ2P-11**	22	43	11.5

How to Increase Manifold Bases (Series SY9000 only) Manifold case can be added at any location.

When a type 23 manifold base is added, tension bolts as well as manifold block assembly will be required. Order the tension bolt suitable for the stations after a station was increased (decreased), since the length of a tension bolt differs by the number of stations. (For changing the number of stations for a type 23P manifold, wiring unit for the stations and lead assembly will be required.)

1. Loosen the tension bolts ⑤ connecting the manifold base, and pull out both of 2 tension bolts.
   (When equipped with a DIN rail, loosen one DIN rail holding screw on either U side or D side.)
2. Separate the blocks at the location where station expansion is desired.
3. Mount additional manifold block assembly.
4. Press block-to-block so that there's no gap. After connection, insert a tension bold for desired stations and then tighten it.

⚠ **Caution** (Tightening torque: 2.9 N·m)
(When equipped with a DIN rail, be sure to tighten the DIN rail holding screws after tightening the tension bolts. Tightening torque: 1.4 N·m)

⚠ Caution

1. Be sure to shut off the power and air supplies before disassembly. Furthermore, since air may remain inside the actuator, piping and manifold, confirm that the air is completely exhausted before performing any work.
2. When disassembly and assembly are performed, air leakage may result if connections between blocks and tightening of the end block's holding screw, is inadequate.
3. By adding wiring unit assembly to type 23 manifold, it can be changed to type 23P manifold, too.

Body Ported Manifold Exploded View, 23/23P Common

As for body ported manifold, it is available only for Series SY9000 to disassemble or increase the manifold.

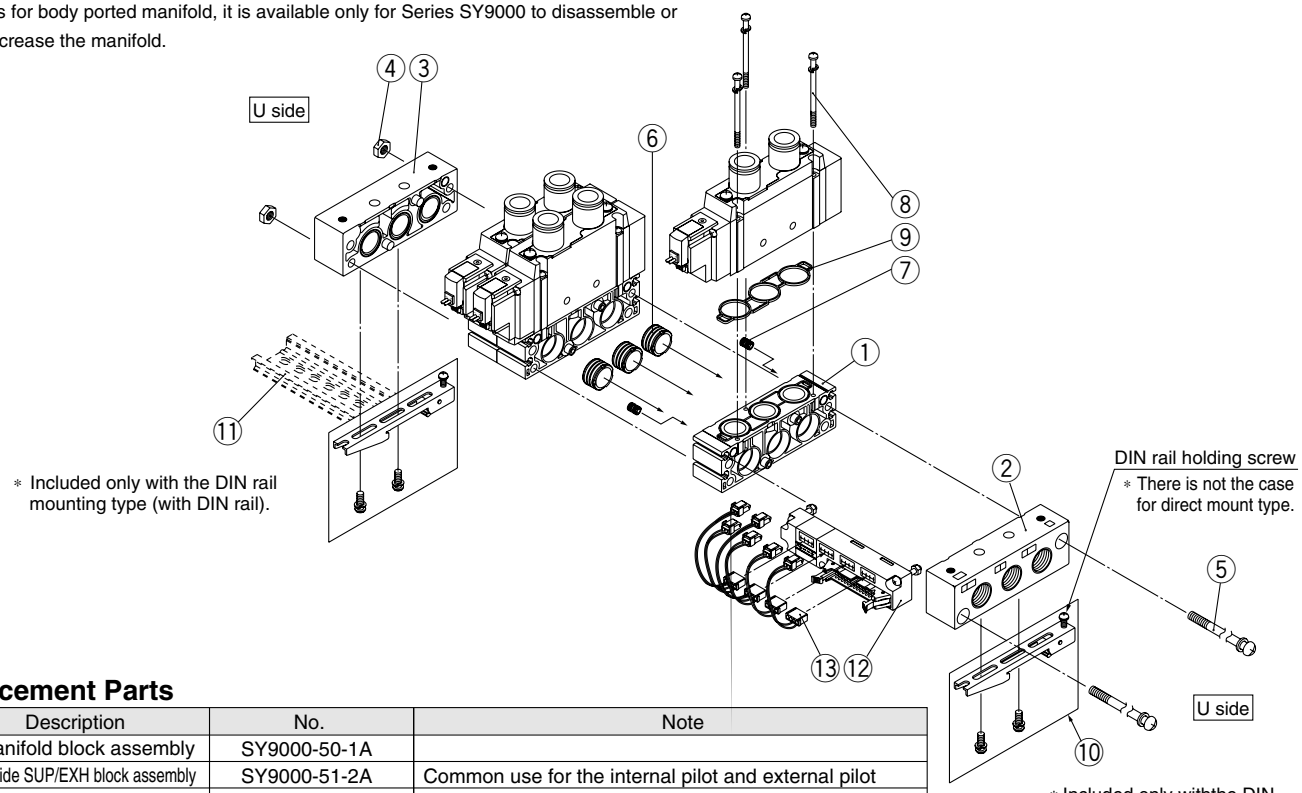

Replacement Parts

No.	Description	No.	Note
1	Manifold block assembly	SY9000-50-1A	
2	D side SUP/EXH block assembly	SY9000-51-2A	Common use for the internal pilot and external pilot
3	U side SUP/EXH block	SY9000-51-4	Common use for the internal pilot and external pilot
4	Hexagon nut	SY9000-25-1	M5 x 0.8
5	Tension bolt	SY9000-23-□	Since □ at the end of part number corresponds with the number of stations, fill in the same number as the number of stations.
6	SUP Block bush assembly	SY9000-61-1A	Included in the Manifold block assembly and the D side SUP/EXH block assembly.
7	SUP Block bush assembly	SY9000-61-3A	Included in the Manifold block assembly and the D side SUP/EXH block assembly.
8	Round head combination screw	SY9000-18-2	Included in the Manifold block assembly.
9	Manifold gasket	SY9000-11-1	Included in the Manifold block assembly.
10	Clamp sub assembly	SY9000-29-1A	
11	DIN rail	VZ1000-11-4-□	Refer to p. 57.
12	Wiring unit assembly	SY9000-36-□A	Since □ in part number corresponds with the number of stations, fill in the number of stations (4 to 12).
13	Connector assembly	SY9000-37-□□	Refer to page 54.

Type 60

5 Port Solenoid Valve
Series SY3000/5000/7000
Body Ported
Cassette Type

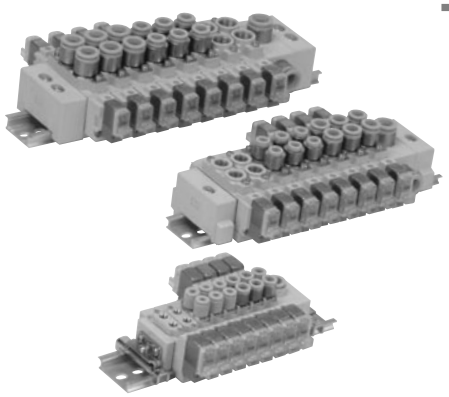

How to Order

SS5Y 3 — 60 — 05 D — -Q

Series

3	SY3000
5	SY5000
7	SY7000

Valve stations

02	2 stations
⋮	⋮
20	20 stations

Option

When a DIN rail longer than standard is required, enter the number of manifold stations that corresponds with the length of DIN rail needed. Max. 20 stations

SUP/EXH block assembly mounting position

Symbol	Mounting position	Applicable stations
U	U side	2 to 10 stations
D	D side	
B	Both sides	2 to 20 stations
M*	Special location	

* For special specifications, indicate separately by the manifold specification sheet.

How to Order Valve Manifold Assembly (Example)

Example

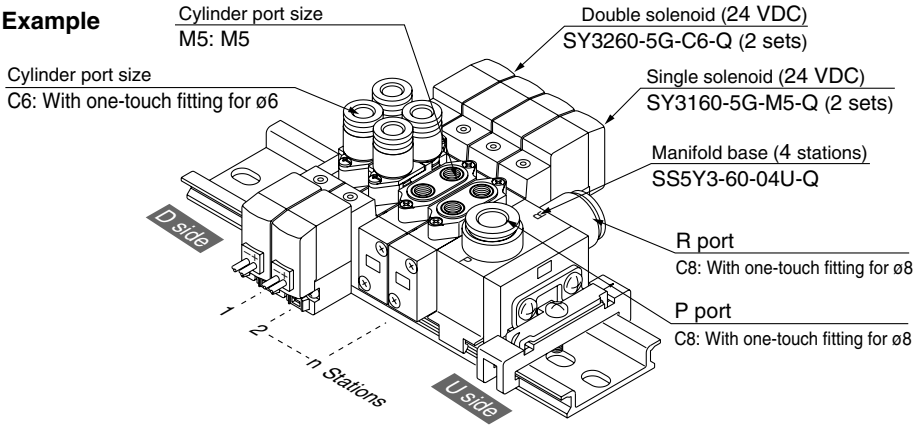

SS5Y3-60-04U-Q — **1 set (Type 60, 4 station manifold base part no.)**
* **SY3260-5G-C6-Q** — **2 sets (Double solenoid part no.)**
* **SY3160-5G-M5-Q** — **2 sets (Single solenoid part no.)**

→ The asterisk denotes the symbol for assembly. Prefix it to the part nos. of the solenoid valve, etc.

Add the valve and option part number under the manifold base part number. In the case of complex arrangement, specify them on the manifold specification sheet.

Manifold Specifications

Model		SS5Y3-60	SS5Y5-60	SS5Y7-60
Applicable valve		SY3□60	SY5□60	SY7□60
Manifold type		Stacking type/DIN rail mounted		
P (SUP)/R (EXH)		Common SUP/Common EXH		
Valve stations		2 to 20 stations Note 1)		
A, B port location		Valve		
Port size	P, R port	C8 (One-touch fitting for ø8)	C10 (One-touch fitting for ø10)	C12 (One-touch fitting for ø12)
	A, B port	M5 C4(One-touch fitting for ø4) C6 (One-touch fitting for ø6)	1/8 C4 (One-touch fitting for ø4) C6 (One-touch fitting for ø6) C8 (One-touch fitting for ø8)	1/4 C8 (One-touch fitting for ø8) C10 (One-touch fitting for ø10)
Manifold base weight W (g) Note 2) (n: Number of SUP/EXH blocks, m: Weight of DIN rail)		W = 13n + m + 36	W = 41.2n + m + 77.6	W = 65.4n + m + 128.2

Note 1) In cases such as those where many valves are operated simultaneously, use "-station B (SUP/EXH block on both sides)" (both sides SUP/EXH), applying pressure to the P ports on both sides and exhausting from the R ports on both sides.

Note 2) For DIN rail weight, refer to page 67.

Flow Characteristics

Model	Port size		Flow characteristics							
	1,5/3 (P,R)	4,2 (A,B)	1 → 4/2(P → A/B)				4/2 → 5/3(A/B → R)			
			C (dm^3/(s·bar))	b	Cv	Q[ℓ/min(ANR)]*	C (dm^3/(s·bar))	b	Cv	Q[ℓ/min(ANR)]*
SS5Y3-60	C8	M5	0.55	0.29	0.14	139	0.72	0.24	0.18	176
		C4	0.57	0.24	0.14	140	0.71	0.20	0.17	170
		C6	0.68	0.28	0.17	171	0.77	0.24	0.19	189
SS5Y5-60	C10	1/8	1.8	0.24	0.44	441	2.1	0.17	0.47	495
		C6	1.5	0.30	0.37	381	2.0	0.16	0.46	469
		C8	1.8	0.20	0.45	431	2.2	0.17	0.50	518
SS5Y7-60	C12	1/4	3.7	0.25	0.96	912	3.8	0.19	0.94	905
		C8	3.2	0.26	0.81	794	4.0	0.18	0.96	947
		C10	3.7	0.28	0.98	929	4.1	0.19	1.0	977

Note) The value is for manifold base with 5 stations and individually operated 2 position type.

* These values have been calculated according to ISO6358 and represent the flow rate measured in standard conditions at an upstream pressure of 0.6 MPa (relative pressure) and a differential pressure of 0.1MPa.

How to Order Valve

SY 3 1 60 □ — 5 L □ □ — C6 -Q

Series

3	SY3000
5	SY5000
7	SY7000

Type of actuation

1	2 position single
2	2 position double
3	3 position closed center
4	3 position exhaust center
5	3 position pressure center

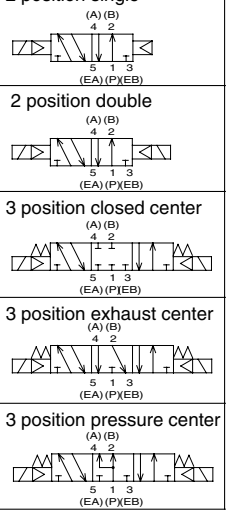

Coil specifications

-	Standard
T	With power saving circuit (24 VDC, 12 VDC only)

∗ Power saving circuit is not available in the case of D, DO or W□ type.

Rated voltage

For DC

5	24 VDC
6	12 VDC
V	6 VDC
S	5 VDC
R	3 VDC

For AC (50/60Hz)

1	100 VAC
2	200 VAC
3	110 VAC [115 VAC]
4	220 VAC [230 VAC]

∗ DC specifications of type D and DO is only available with 12 and 24 VDC.
∗ AC specification is only available with D and DO type.

A, B port size

Thread piping

Symbol	Port size	Applicable series
M5	M5	SY3000
01	1/8	SY5000
02	1/4	SY7000

One-touch fitting (Metric size)

Symbol	Port size	Applicable series
C4	One-touch fitting for ø4	SY3000
C6	One-touch fitting for ø6	
C4	One-touch fitting for ø4	SY5000
C6	One-touch fitting for ø6	
C8	One-touch fitting for ø8	
C8	One-touch fitting for ø8	SY7000
C10	One-touch fitting for ø10	

One-touch fitting (Inch size)

Symbol	Port size	Applicable series
N3	One-touch fitting for ø5/32"	SY3000
N7	One-touch fitting for ø1/4"	
N3	One-touch fitting for ø5/32"	SY5000
N7	One-touch fitting for ø1/4"	
N9	One-touch fitting for ø5/16"	
N9	One-touch fitting for ø5/16"	SY7000
N11	One-touch fitting for ø3/8"	

Manual override

-: Non-locking push type	D: Push-turn locking slotted type	E: Push-turn locking lever type
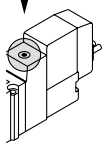	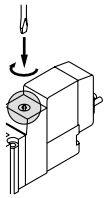	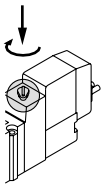

Light/surge voltage suppressor

Electrical entry for G, H, L, M, W

-	Without light/surge voltage suppressor
S	With light/surge voltage suppressor
Z	With light/surge voltage suppressor
R	With surge voltage suppressor (Non-polar type)
U	With light/surge voltage suppressor (Non-polar type)

∗ Power saving circuit is only available in the "Z" type.

Electrical entry for D (SY5000/7000 only)

-	Without light/surge voltage suppressor
S	With surge voltage suppressor (Non-polar type)
Z	With light/surge voltage suppressor (Non-polar type)

∗ For AC voltage valves there is no "S" option. It is already built-in to the rectifier circuit.
∗ DOZ is not available.

Electrical entry

24, 12, 6, 5, 3 VDC				24, 12 VDC/ 100, 110, 200, 220 VAC	24, 12, 6, 5, 3 VDC
Grommet	L plug connector	M plug connector		DIN terminal	M8 connector ∗
G: Lead wire length 300 mm	**L:** With lead wire (Length 300 mm)	**M:** With lead wire (Length 300 mm)	**MN:** Without lead wire	(**SY5000, 7000**) **D:** With connector	**WO:** Without connector cable
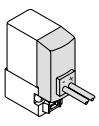	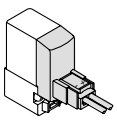	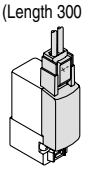	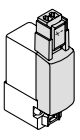	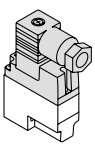	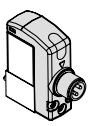
H: Lead wire length 600 mm	**LN:** Without lead wire	**LO:** Without connector	**MO:** Without connector	**DO:** Without connector	**W□:** With connector cable Note 1)
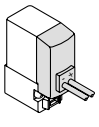	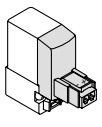	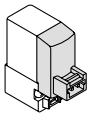	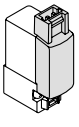	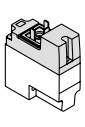	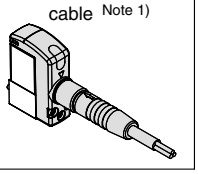

∗ LN, MN type: with 2 sockets.
∗ DIN terminal type "Y" which conforms to EN-175301-803C (former DIN43650C) is also available. For details, refer to page 210.
∗ For connector cable of M8 connector, refer to back page 12.
∗ Connector M8 type "WA" conforming to IEC 60947-5-2 standard, is also available. For details, see page 211.
Note 1) Enter the cable length symbols in □. Please be sure to fill in the blank referring to back page 13.

Specifications

Series		SY3000	SY5000	SY7000
Fluid		Air		
Internal pilot Operating pressure range (MPa)	2 position single	0.15 to 0.7		
	2 position double	0.1 to 0.7		
	3 position	0.2 to 0.7		
Ambient and fluid temperature (°C)		Max. 50		
Max. operating frequency (Hz)	2 position double	10	5	5
	3 position	3	3	3
Manual override (Manual operation)		Non-locking push type, Push-turn locking slotted type, Push-turn locking lever type		
Pilot exhaust method		Common exhaust type for main and pilot valve		
Lubrication		Not required		
Mounting position		Unrestricted		
Impact/Vibration resistance Note)		150/30		
Enclosure		Dust proof (∗ DIN terminal, M8 connector: IP65)		

Note) Impact resistance: No malfunction occurred when it is tested in the axial direction and at the right angles to the main valve and armature in both energised and de-energised states every once for each condition.

Vibration resistance: No malfunction occurred in a one-sweep test between 45 and 2000 Hz. Test was performed at both energised and de-energised states in the axial direction and at the right angles to the main valve and armature. (Values in the initial stage)

∗ Based on IEC60529

Solenoid Specifications

Electrical entry			Grommet (G), (H) L plug connector (L) M plug connector (M) DIN terminal (D) M8 connector (W)	
			G, H, L, M, W	D
Coil rated voltage (V)	DC		24, 12, 6, 5, 3	24, 12
	AC 50/60 Hz		100, 110	200, 220
Allowable voltage fluctuation (%)			±10% of rated voltage ∗	
Power consumption (W)	DC	Standard	0.35 [With indicator light: 0.4 (DIN terminal with indicator light: 0.45)]	
		With power saving circuit	0.1 (With indicator light only)	
Apparent power (VA) ∗	AC	100 V	-	0.78 (With indicator light: 0.87)
		110 V [115 V]	- -	0.86 (With indicator light: 0.97) [0.94 (With indicator light: 1.07)]
		200 V	-	1.15 (With indicator light: 1.30)
		220 V [230 V]	- -	1.27 (With indicator light: 1.46) [1.39 (With indicator light: 1.60)]
Surge voltage suppressor			Diode (Varistor is for DIN terminal and non-polar)	
Indicator light			LED (AC of DIN connector is neon light.)	

∗ In common between 110 VAC and 115 VAC, and between 220 VAC and 230 VAC.

∗ For 115 VAC and 230 VAC, the allowable voltage is –15% to +5% of rated voltage.

∗ S, Z and T type (with power saving circuit) should be used within the following allowable voltage fluctuation range due to a voltage drop caused by the internal circuit.

S and Z type: 24 VDC: –7% to +10%
12 VDC: –4% to +10%
T type: 24 VDC: –8% to +10%
12 VDC: –6% to +10%

Response Time

Note) Based on dynamic performance test, JIS B 8375-1981. (Coil temperature: 20°C, at rated voltage)

SY3000

Type of actuation	Response time (ms) (at the pressure of 0.5 MPa)		
	Without surge voltage suppressor	With surge voltage suppressor	
		S, Z type	R, U type
2 position single	12 or less	15 or less	12 or less
2 position double	10 or less	13 or less	10 or less
3 position	15 or less	20 or less	16 or less

SY5000

Type of actuation	Response time (ms) (at the pressure of 0.5 MPa)		
	Without surge voltage suppressor	With surge voltage suppressor	
		S, Z type	R, U type
2 position single	19 or less	26 or less	19 or less
2 position double	18 or less	22 or less	18 or less
3 position	32 or less	38 or less	32 or less

SY7000

Type of actuation	Response time (ms) (at the pressure of 0.5 MPa)		
	Without light/surge voltage suppressor	With light/surge voltage suppressor	
		S, Z type	R, U type
2 position single	31 or less	38 or less	33 or less
2 position double	27 or less	30 or less	28 or less
3 position	50 or less	56 or less	50 or less

Weight

Series SY3000

Valve model	Type of actuation		Port size	Weight (g)		
			A, B	Gro-mmet	L/M plug connector	M8 Connector
SY3□60-□-M5	2 position	Single	M5	49	51	55
		Double		70	73	81
	3 position	Closed center		73	76	84
		Exhaust center				
		Pressure center				
SY3□60-□-C4	2 position	Single	C4 (One-touch fitting for ø4)	62	61	65
		Double		80	83	91
	3 position	Closed center		82	86	94
		Exhaust center				
		Pressure center				
SY3□60-□-C6	2 position	Single	C6 (One-touch fitting for ø6)	55	57	61
		Double		76	79	87
	3 position	Closed center		78	82	90
		Exhaust center				
		Pressure center				

Note) [ ]: denotes normal position.

Series SY5000

Valve model	Type of actuation		Port size	Weight (g)			
			A, B	Gro-mmet	L/M plug connector	DIN terminal	M8 Conne-ctor
SY5□60-□-01	2 position	Single	1/8	67	69	90	71
		Double		91	94	136	102
	3 position	Closed center		97	100	142	108
		Exhaust center					
		Pressure center					
SY5□60-□-C4	2 position	Single	C4 (One-touch fitting for ø4)	91	93	114	97
		Double		113	116	158	124
	3 position	Closed center		119	122	164	130
		Exhaust center					
		Pressure center					
SY5□60-□-C6	2 position	Single	C6 (One-touch fitting for ø6)	86	88	109	92
		Double		108	111	153	119
	3 position	Closed center		114	117	159	125
		Exhaust center					
		Pressure center					
SY5□60-□-C8	2 position	Single	C8 (One-touch fitting for ø8)	78	80	101	84
		Double		100	103	145	111
	3 position	Closed center		106	109	151	117
		Exhaust center					
		Pressure center					

Series SY7000

Valve model	Type of actuation		Port size	Weight (g)			
			A, B	Gro-mmet	L/M plug connector	DIN terminal	M8 Conne-ctor
SY7□60-□-02	2 position	Single	1/4	103	105	126	109
		Double		125	128	170	136
	3 position	Closed center		133	136	178	144
		Exhaust center					
		Pressure center					
SY7□60-□-C8	2 position	Single	C8 (One-touch fitting for ø8)	138	139	160	143
		Double		160	163	205	171
	3 position	Closed center		168	171	213	179
		Exhaust center					
		Pressure center					
SY7□60-□-C10	2 position	Single	C10 (One-touch fitting for ø10)	123	125	146	129
		Double		145	149	191	157
	3 position	Closed center		153	157	199	165
		Exhaust center					
		Pressure center					

How to Order Pilot Valve Assembly

V111 □ — 5 G □

Coil specifications

Nil	Standard
T	With power saving circuit (24 VDC, 12 VDC only)

∗ Power saving circuit is not available in the case of D, DO or W□ type.

Rated voltage

5	24 VDC
6	12 VDC
V	6 VDC
S	5 VDC
R	3 VDC

Light/surge voltage suppressor

Nil	Without light/surge voltage suppressor
S	With surge voltage suppressor
Z	With light/surge voltage suppressor
R	With surge voltage suppressor (Non-polar type)
U	With light/surge voltage suppressor (Non-polar type)

∗ Power saving circuit is only available in the "Z" type.

Electrical entry

G	Grommet, 300 mm lead wire	
H	Grommet, 600 mm lead wire	
L	L plug connector	With lead wire
LN		Without lead wire
LO		Without connector
M	M plug connector	With lead wire
MN		Without lead wire
MO		Without connector
WO	M8 connector	Without connector cable
W□		With connector cable Note 1)

∗ For connector cable of M8 connector, refer to back page 12.

Note 1) Enter the cable length symbols in □. Please be sure to fill in the blank referring to back page 13.

■ DIN terminal type

V115 — 5 D □

Rated voltage

5	24 VDC
6	12 VDC
1	100 VAC 50/60 Hz
2	200 VAC 50/60 Hz
3	110 VAC 50/60 Hz [115 VAC 50/60 Hz]
4	220 VAC 50/60 Hz [230 VAC 50/60 Hz]

∗ DC specifications of Type D and DO is only available with 12 and 24 VDC.

Light/surge voltage suppressor

Nil	Without light/surge voltage suppressor
S	With surge voltage suppressor (Non-polar type)
Z	With light/surge voltage suppressor (Non-polar type)

∗ DOZ is not available.
∗ For AC voltage valves there is no "S" option. It is already built-in to the rectifier circuit.

Electrical entry

D	DIN terminal	With connector
DO		Without connector

Note) Do not replace V111 (G, H, L, M) to V115 (DIN terminal) and vice versa when replacing pilot valve assembly only.

How to Order Connector Assembly for L/M Plug Connector

For DC: SY100 − 30 − 4A − □

Without lead wire: SY100 − 30 − A

Only connector and sockets (x 2 pcs.)

Lead wire length

Nil	300 mm
6	600 mm
10	1000 mm
15	1500 mm
20	2000 mm
25	2500 mm
30	3000 mm
50	5000 mm

How to Order M8 Connector Cable

V100 − 49 − 1 − □

Cable length

1	300 mm
2	500 mm
3	1000 mm
4	2000 mm
7	5000 mm

∗ For details, refer to back page 5.

How to Order Port Block Assembly

SY 3 000 — 6A — C4

Series

3	SY3000
5	SY5000
7	SY7000

A, B port size

Thread piping

Symbol	Port size	Applicable series
M5	M5	SY3000
01	1/8	SY5000
02	1/4	SY7000

One-touch fitting (Metric size)

Symbol	Port size	Applicable series
C4	One-touch fitting for ø4	SY3000
C6	One-touch fitting for ø6	
C4	One-touch fitting for ø4	SY5000
C6	One-touch fitting for ø6	
C8	One-touch fitting for ø8	
C8	One-touch fitting for ø8	SY7000
C10	One-touch fitting for ø10	

One-touch fitting (Inch size)

Symbol	Port size	Applicable series
N3	One-touch fitting for ø5/32"	SY3000
N7	One-touch fitting for ø1/4"	
N3	One-touch fitting for ø5/32"	SY5000
N7	One-touch fitting for ø1/4"	
N9	One-touch fitting for ø5/16"	
N9	One-touch fitting for ø5/16"	SY7000
N11	One-touch fitting for ø3/8"	

How to Change Port Block Assembly

Connecting port size of A and B can be changed by replacing port block assembly mounted on body. When changing block assembly, correct screw torque must be achieved to avoid trouble; e.g. air leakage.

With the one-touch fitting port block assembly, it is only necessary to change the fitting and not the whole block. Refer to following part numbers.

One-touch fitting (Metric size)

Port size	Fitting assembly part no.	Applicable series
One-touch fitting for ø4	VVQ1000-50A-C4	SY3000
One-touch fitting for ø6	VVQ1000-50A-C6	
One-touch fitting for ø4	VVQ1000-51A-C4	SY5000
One-touch fitting for ø6	VVQ1000-51A-C6	
One-touch fitting for ø8	VVQ1000-51A-C8	
One-touch fitting for ø8	VVQ2000-51A-C8	SY7000
One-touch fitting for ø10	VVQ2000-51A-C10	

One-touch fitting (Inch size)

Port size	Fitting assembly part no.	Applicable series
One-touch fitting for ø5/32"	VVQ1000-50A-N3	SY3000
One-touch fitting for ø1/4"	VVQ1000-50A-N7	
One-touch fitting for ø5/32"	VVQ1000-51A-N3	SY5000
One-touch fitting for ø1/4"	VVQ1000-51A-N7	
One-touch fitting for ø5/16"	VVQ1000-51A-N9	
One-touch fitting for ø1/4"	VVQ2000-51A-N9	SY7000
One-touch fitting for ø3/8"	VVQ2000-51A-N11	

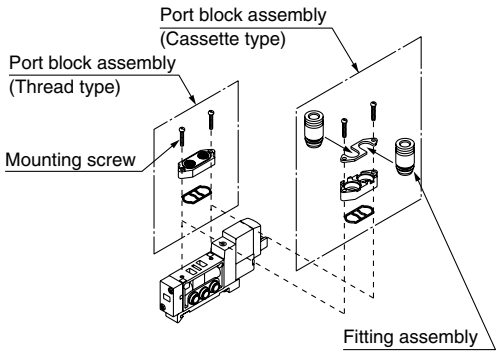

⚠ Caution

Torque for mounting screws

SY3000(M2): 0.12 N·m
SY5000, 7000 (M3): 0.6 N·m

∗ Refer to "How to Change Port Block Assembly" for part numbers.

Manifold Option

■ Individual SUP block assembly

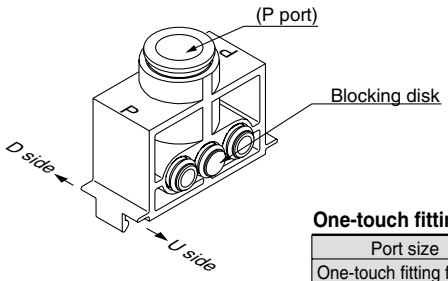

One-touch fitting (Metric size)

Port size	Assembly part no.	Applicable series
One-touch fitting for ø6	SY3000-54-2C-Q	SY3000
One-touch fitting for ø8	SY3000-54-1C-Q	
One-touch fitting for ø10	SY5000-54-1C-Q	SY5000
One-touch fitting for ø12	SY7000-54-1C-Q	SY7000

One-touch fitting (Inch size)

Port size	Assembly part no.	Applicable series
One-touch fitting for ø5/16"	SY3000-54-3C-Q	SY3000
One-touch fitting for ø3/8"	SY5000-54-2C-Q	SY5000
One-touch fitting for ø3/8"	SY7000-54-3C-Q	SY7000

■ Individual EXH block assembly

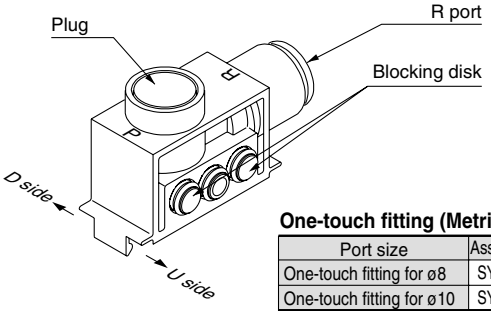

One-touch fitting (Metric size)

Port size	Assembly part no.	Applicable series
One-touch fitting for ø8	SY3000-55-1B-Q	SY3000
One-touch fitting for ø10	SY5000-55-1B-Q	SY5000
One-touch fitting for ø12	SY7000-55-1B-Q	SY7000

One-touch fitting (Inch size)

Port size	Assembly part no.	Applicable series
One-touch fitting for ø5/16"	SY3000-55-2B-Q	SY3000
One-touch fitting for ø3/8"	SY5000-55-2B-Q	SY5000
One-touch fitting for ø3/8"	SY7000-55-3B-Q	SY7000

[When supplying the manifold with 2 different supply pressures.]

Specify arrangement of individual SUP block assembly on the manifold specification sheet. (When using SS5Y□-60-□□D, blocking disk is assembled on D side.)

<Manifold model no.: SS5Y$^{3}_{5}$-60-□□$^{U}_{D}$>

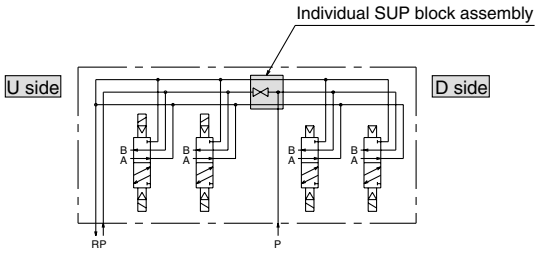

[When 2 different EXH passages are required.]

Specify arrangement of individual EXH block assembly on the manifold specification sheet. (When using SS5Y□-60-□□D, blocking disk is assembled on D side.)

<Manifold model no.: SS5Y$^{3}_{5}$-60-□□$^{U}_{D}$>

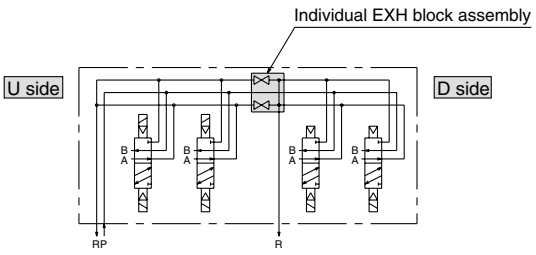

[When a different supply pressure is required for only a middle valve.]

Specify arrangement of individual SUP block assembly and SUP blocking disk on the manifold specification sheet.
(Applicable manifold model no.: SS5Y□-60-□□B)

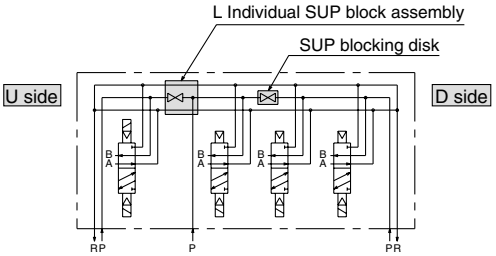

[When a separate exhaust passage is needed on only a middle valve.]

Specify arrangement of individual EXH block assembly and EXH blocking disk on the manifold specification sheet.
(Applicable manifold model no.: SS5Y□-60-□□B)

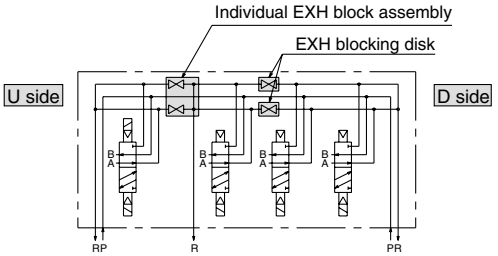

Manifold Option

■ SUP blocking disk

By installing a SUP blocking disk in the pressure supply passage of a manifold valve, it is possible to supply two or more different high and low pressures to one manifold. (This is the same block disk used with the individual SUP block assembly.)



Series	No.
SY3000	SY3000-52-6A
SY5000	SY5000-52-4A
SY7000	SY7000-70-2A

■ EXH blocking disk

By installing an EXH blocking disk in the exhaust passage of a manifold valve, it is possible to divide the valve's exhaust so that it does not affect another valve. (Two blocking disks are needed to separate both EXH passages. It is the same block disk that is used in the individual EXH block assembly.)



Series	No.
SY3000	SY3000-52-6A
SY5000	SY5000-52-4A
SY7000	SY7000-70-2A

■ Label for block disk

The labels shown below are used on manifold stations containing SUP/EXH blocking disk(s) to show their location. (3 pcs. each)

VZ3000-123-1A

Label for SUP block disk

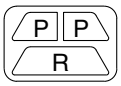

Label for EXH block disk

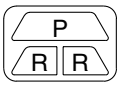

Label for SUP/EXH block disk

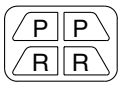

∗ When a block disk is concurrently ordered by specifying on the manifold specification sheet, etc., a label will be stuck on the position where block disk is mounted.

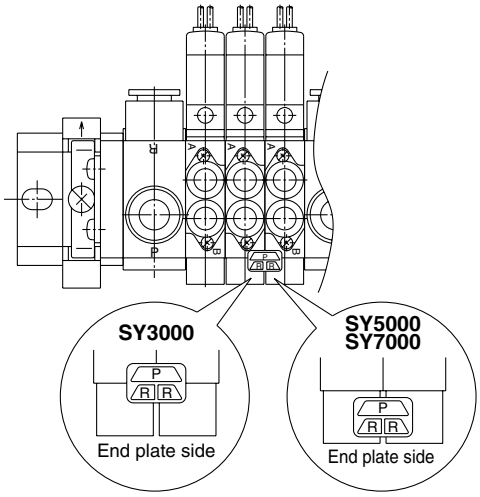

■ Silencer with One-touch fitting

The silencer plugs directly into the One-touch fittings of the manifold.

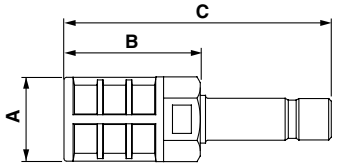

Series	Model	Effective area	A	B	C
SY3000 (for ø8)	AN203-KM8	14 mm²	ø16	26	51
SY5000 (for ø10)	AN200-KM10	26 mm²	ø22	54	80.8
	AN300-KM10	30 mm²	ø25	70	97
SY7000 (for ø12)	AN300-KM12	41 mm²	ø25	70	98

■ Plug (white)

These are inserted in unused cylinder ports and SUP, EXH ports.
Purchasing order is available in units of 10 pieces.

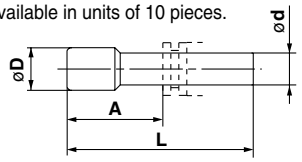

Dimensions

Applicable fittings size ød	Model	A	L	D
4	**KQ2P-04**	16	32	6
6	**KQ2P-06**	18	35	8
8	**KQ2P-08**	20.5	39	10
10	**KQ2P-10**	22	43	12
12	**KQ2P-12**	24	45.5	14
5/32"	**KQ2P-03**	16	32	6
1/4"	**KQ2P-07**	18	35	8.5
5/16"	**KQ2P-09**	20.5	39	10
3/8"	**KQ2P-11**	22	43	11.5

■ DIN Rail Dimensions/Weight for SY3000/5000

VZ1000-11-1-□

• Refer to the L dimension tables

∗ Enter a number from the DIN rail dimension table below in them.

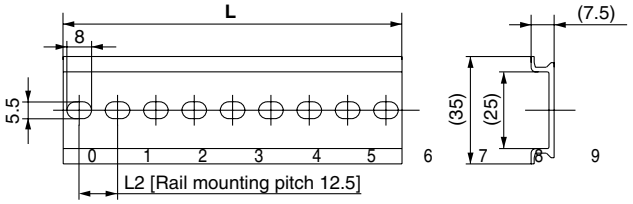

No.										
L dimension	198	110.5	123	135.5	148	160.5	173	185.5	198	210.5
Weight (g)	17.6	19.9	22.1	24.4	26.6	28.9	31.1	33.4	35.6	37.9

No.										
L dimension	223	235.5	248	260.5	273	285.5	298	310.5	323	335.5
Weight (g)	40.1	42.4	44.6	46.9	49.1	51.4	53.6	55.9	58.1	60.4

No.										
L dimension	348	360.5	373	385.5	398	410.5	423	435.5	448	460.5
Weight (g)	62.6	64.9	67.1	69.4	71.6	73.9	76.1	78.4	80.6	82.9

■ DIN Rail Dimensions/Weight for SY7000

VZ1000-11-4-□

• Refer to the L dimension tables

∗ Enter a number from the DIN rail dimension table below in them.

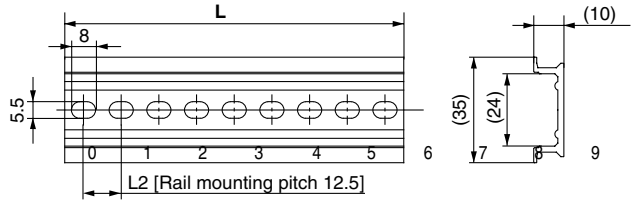

No.										
L dimension	198	110.5	123	135.5	148	160.5	173	185.5	198	210.5
Weight (g)	24.8	28	31.1	34.3	37.4	40.6	43.8	46.9	50.1	53.3

No.										
L dimension	223	235.5	248	260.5	273	285.5	298	310.5	323	335.5
Weight (g)	56.4	59.6	62.7	65.9	69.1	72.2	75.4	78.6	81.7	84.9

No.										
L dimension	348	360.5	373	385.5	398	410.5	423	435.5	448	460.5
Weight (g)	88	91.2	94.4	97.5	100.7	103.9	107	110.2	113.3	116.5

Note) For DIN rail mounting, refer to page 226.

Construction

Series SY

JIS Symbol

2 position single

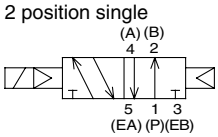

2 position single

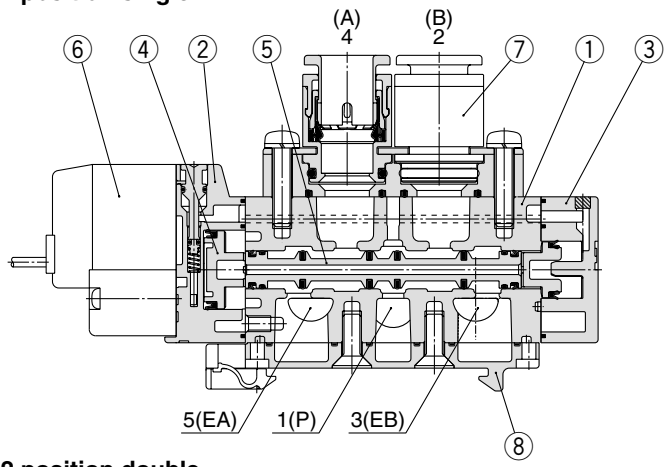

JIS Symbol

2 position double

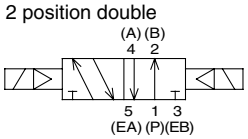

2 position double

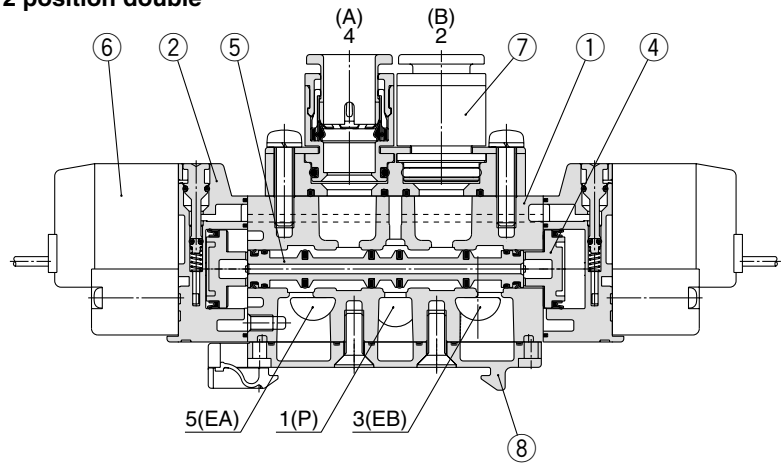

JIS Symbol

3 position closed center

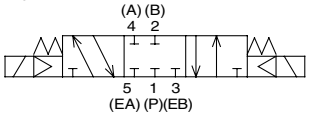

3 position exhaust center

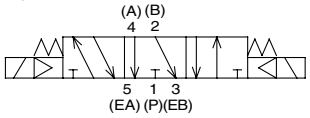

3 position pressure center

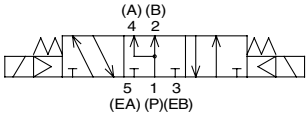

3 position closed center / exhaust center / pressure center

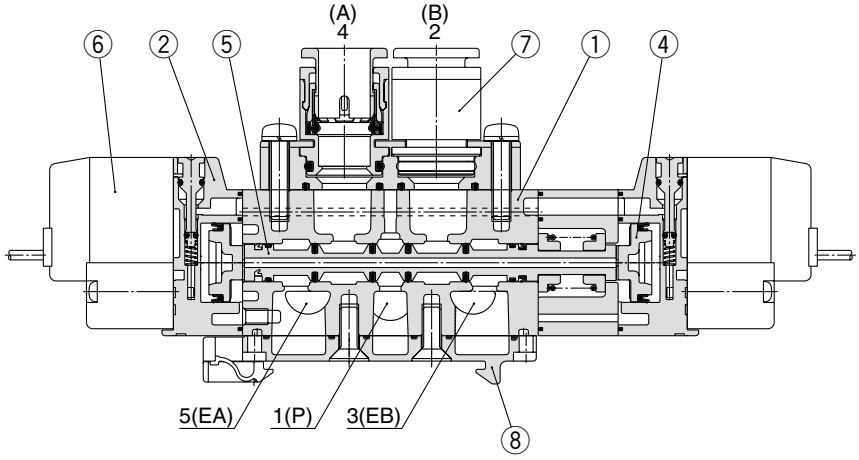

(This figure shows a closed center type.)

Component Parts

No.	Description	Material	Note
1	Body	Aluminum die-casted (SY3000: Zinc die-casted)	White
2	Adapter plate	Resin	White
3	End plate	Resin	White
4	Piston	Resin	—
5	Spool valve assembly	Aluminum/NBR	—

Replacement Parts

No.	Description	No.
6	Pilot valve assembly	Refer to “How to Order Pilot Valve Assembly” on page 64.
7	Port block assembly	Refer to “How to Order Port Block Assembly” on page 65.
8	Bottom cover assembly Note)	SY3000-41-2A (with screw, gasket)
		SY5000-41-2A (with screw, gasket)

Note) There is no bottom cover assembly available for SY7000.

Dimensions

SS5Y3-60-Stations U-Q

Stations	2 stations	3	4	5	6	7	8	9	10 stations
L1	98	110.5	123	135.5	135.5	148	160.5	173	185.5
L2	87.5	100	112.5	125	125	137.5	150	162.5	175
L3	69.5	80	90.5	101	111.5	122	132.5	143	153.5
L4	14	15	16	17	12	13	14	15	16

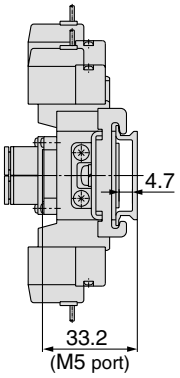

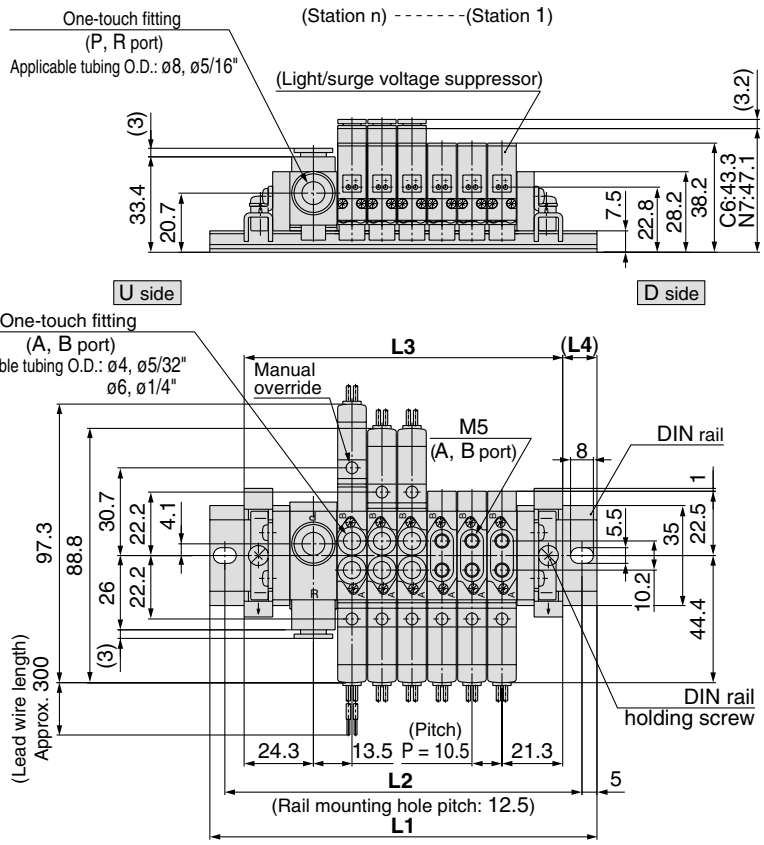

SS5Y3-60-Stations D-Q

Stations	2 stations	3	4	5	6	7	8	9	10 stations
L1	98	110.5	123	135.5	135.5	148	160.5	173	185.5
L2	87.5	100	112.5	125	125	137.5	150	162.5	175
L3	69.5	80	90.5	101	111.5	122	132.5	143	153.5
L4	14	15	16	17	12	13	14	15	16

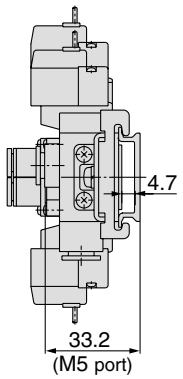

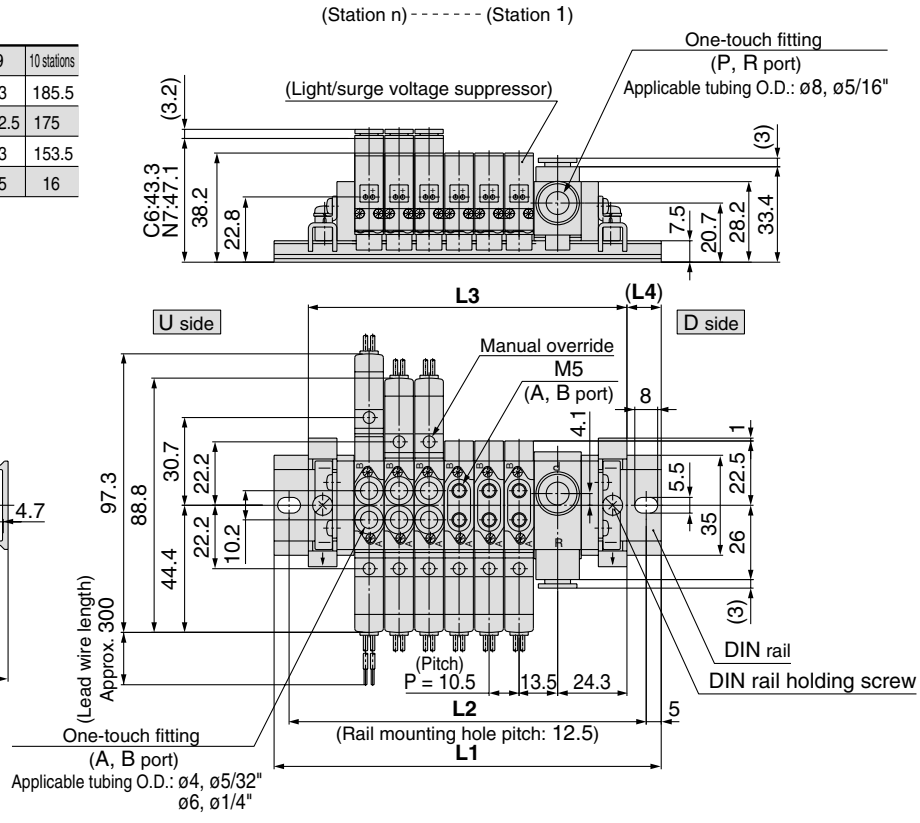

SS5Y3-60- Stations **B-Q**

Stations	2 stations	3	4	5	6	7	8	9	10 stations
L1	110.5	123	135.5	148	160.5	173	173	185.5	198
L2	100	112.5	125	137.5	150	162.5	162.5	175	187.5
L3	86	96.5	107	117.5	128	138.5	149	159.5	170
L4	12	13	14	15	16	17	12	13	14

Stations	11 stations	12	13	14	15	16	17	18	19	20 stations
L1	210.5	223	235.5	235.5	248	260.5	273	285.5	298	310.5
L2	200	212.5	225	225	237.5	250	262.5	275	287.5	300
L3	180.5	191	201.5	212	222.5	233	243.5	254	264.5	275
L4	15	16	17	11.5	12.5	13.5	14.5	15.5	16.5	17.5

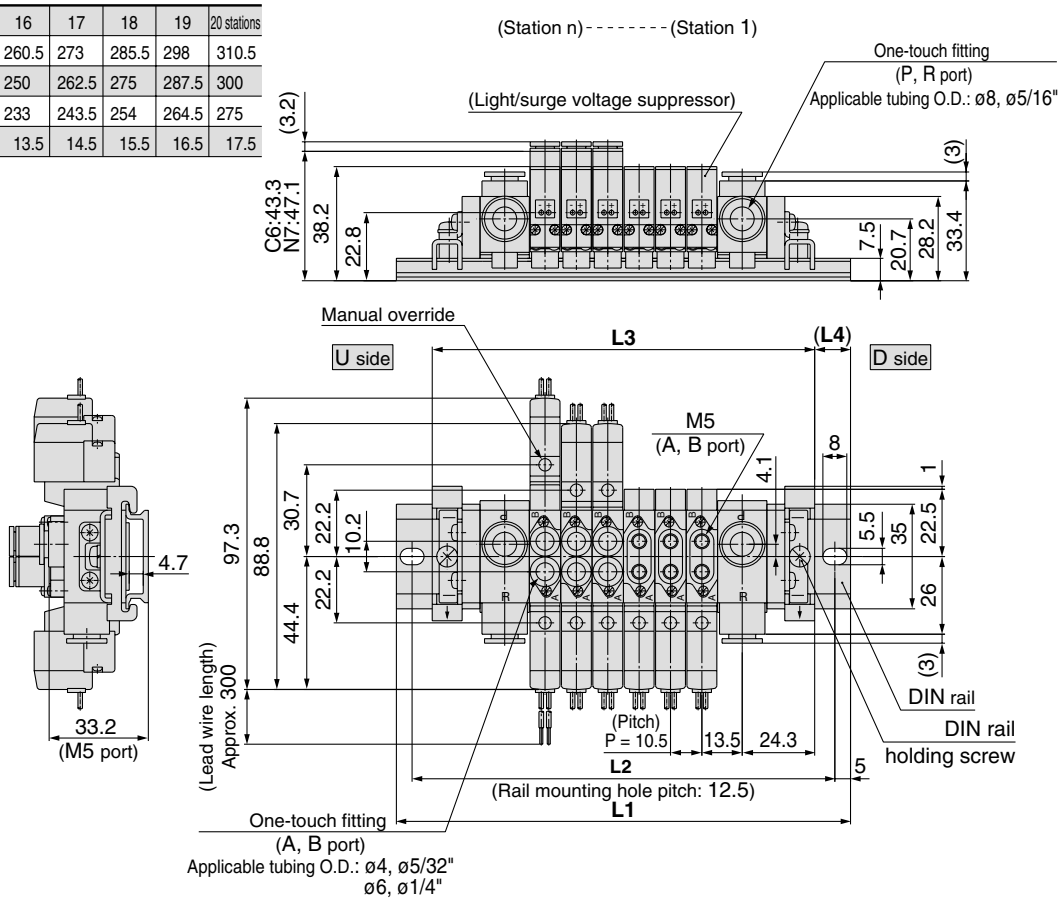

L plug connector (L)

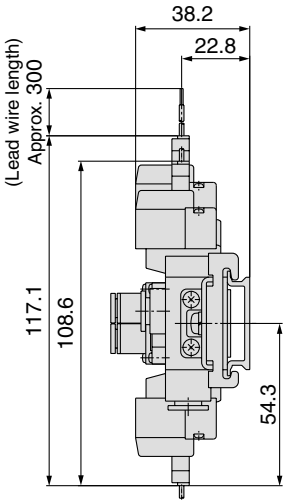

M plug connector (M)

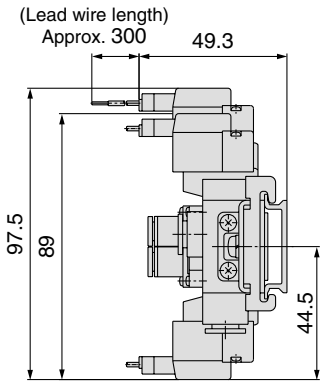

M8 connector (WO)

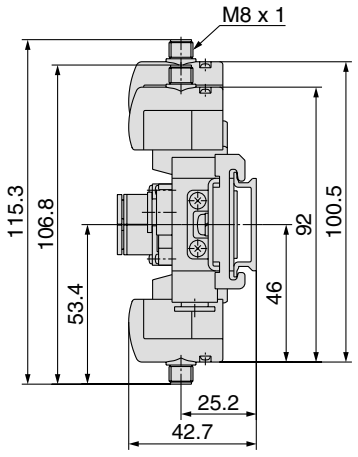

Note) Refer to back page 12 for dimensions of connector types.

Dimensions (mm)

SS5Y5-60-Stations U-Q

Stations	2 stations	3	4	5	6	7	8	9	10 stations
L1	123	135.5	148	160.5	185.5	198	210.5	235.5	248
L2	112.5	125	137.5	150	175	187.5	200	225	237.5
L3	88	104	120	136	152	168	184	200	216
L4	17.5	15.5	14	12	16.5	15	13	17.5	16

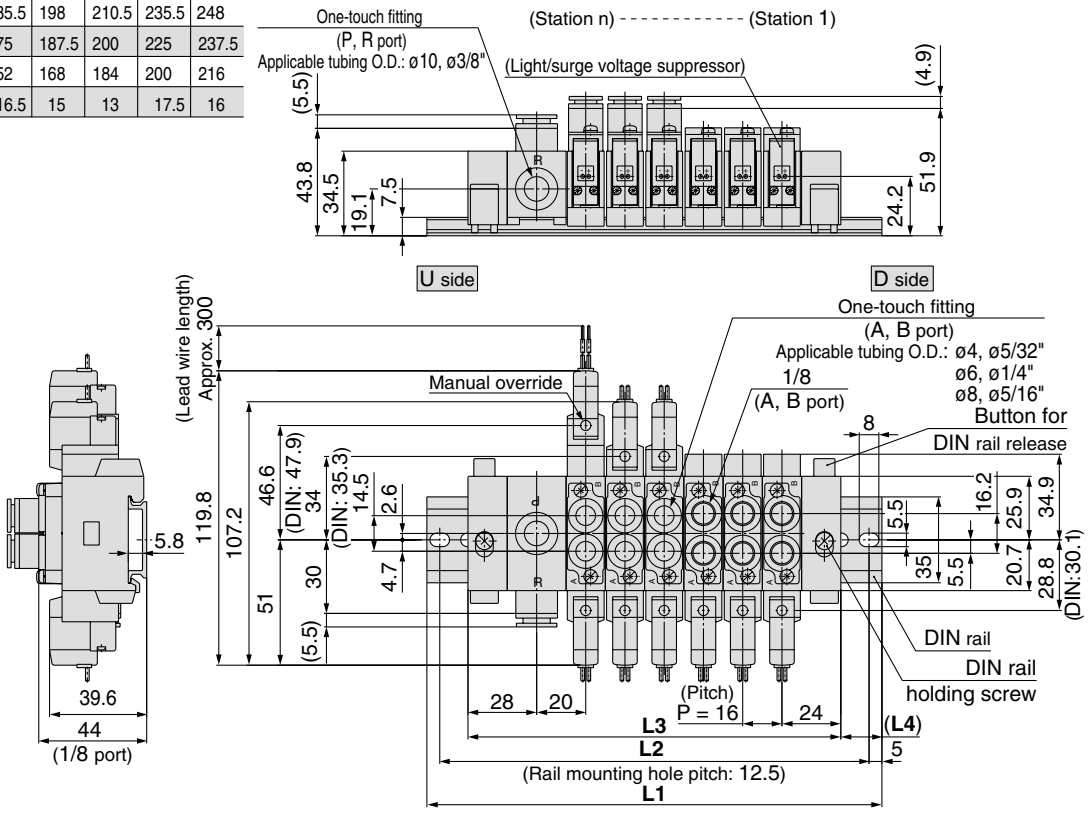

SS5Y5-60-Stations D-Q

Stations	2 stations	3	4	5	6	7	8	9	10 stations
L1	123	135.5	148	160.5	185.5	198	210.5	235.5	248
L2	112.5	125	137.5	150	175	187.5	200	225	237.5
L3	88	104	120	136	152	168	184	200	216
L4	17.5	15.5	14	12	16.5	15	13	17.5	16

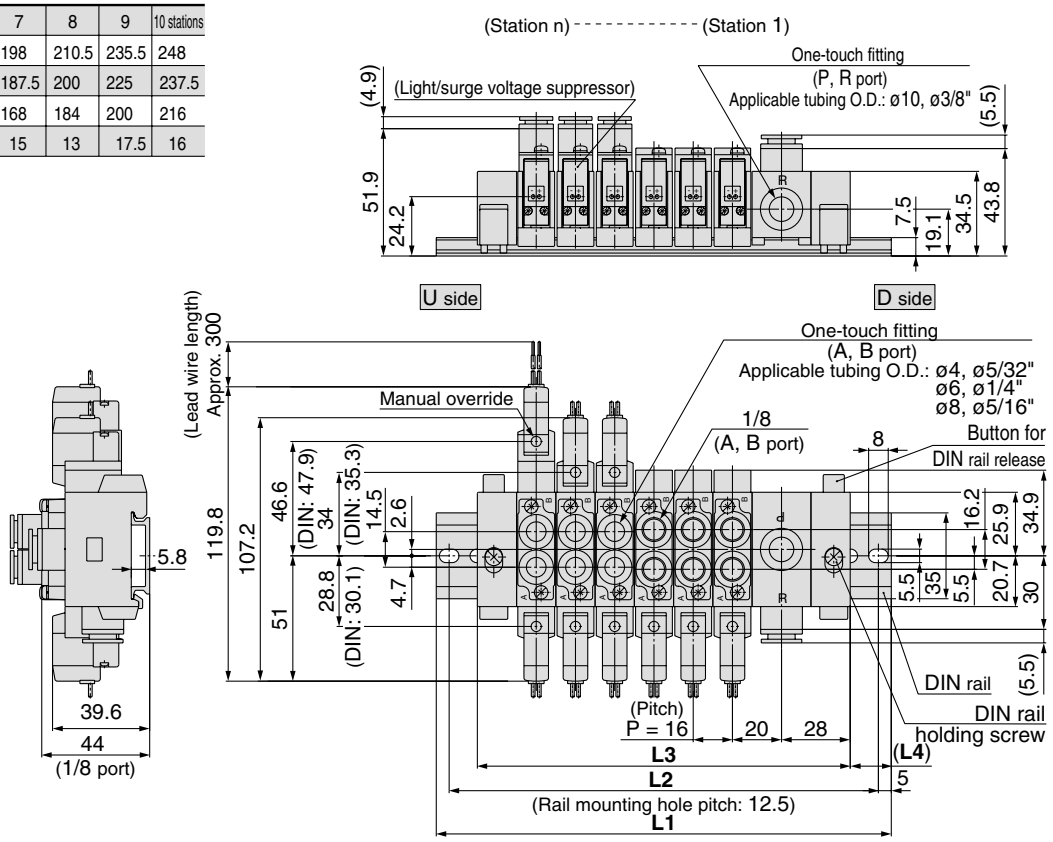

SS5Y5-60-Stations B-Q

Stations	2 stations	3	4	5	6	7	8 stations
L1	135.5	160.5	173	185.5	210.5	223	235.5
L2	125	150	162.5	175	200	212.5	225
L3	112	128	144	160	176	192	208
L4	11.5	16	14.5	12.5	17.5	15.5	13.5

Stations	9 stations	10	11	12	13	14	15 stations
L1	248	273	285.5	298	323	335.5	348
L2	237.5	262.5	275	287.5	312.5	325	337.5
L3	224	240	256	272	288	304	320
L4	12	16.5	14.5	13	17.5	15.5	14

Stations	16 stations	17	18	19	20 stations
L1	360.5	385.5	398	410.5	435.5
L2	350	375	387.5	400	425
L3	336	352	368	384	400
L4	12	16.5	15	13	17.5

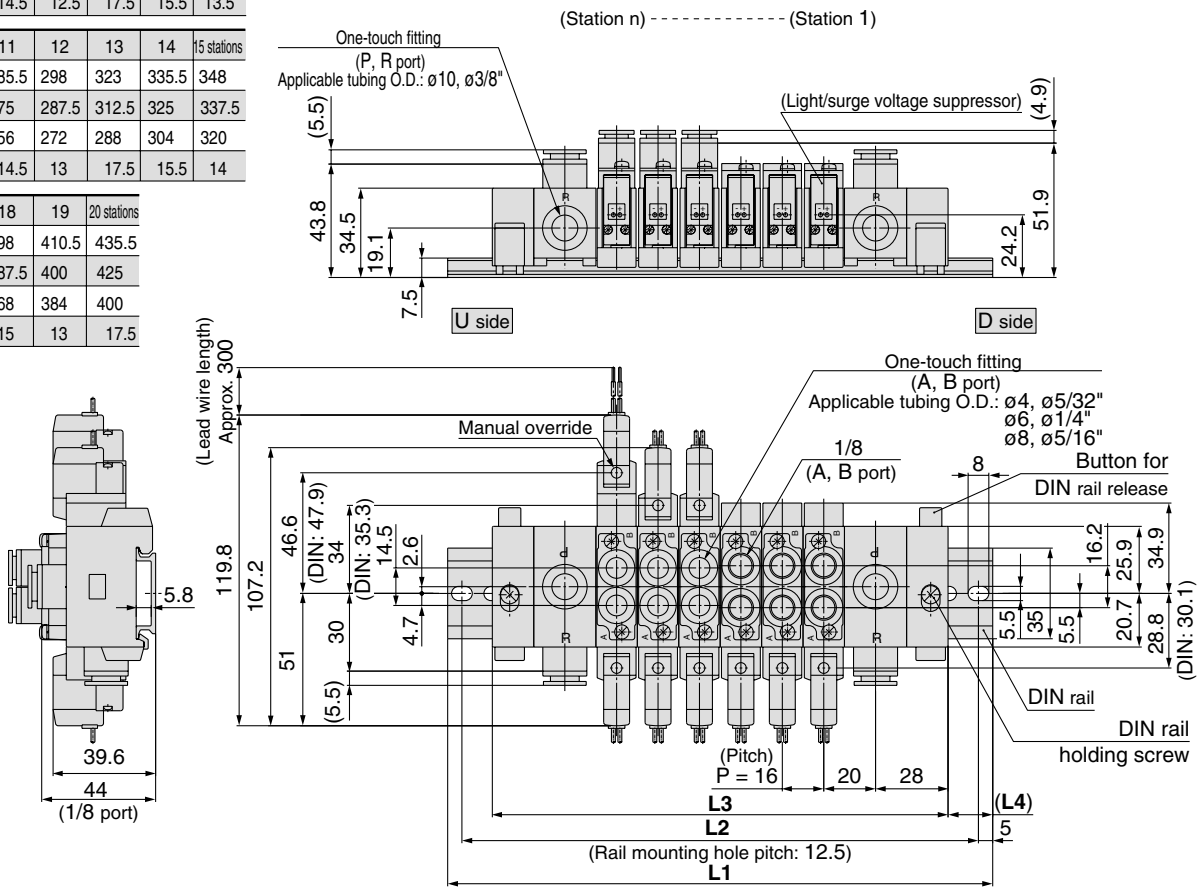

L plug connector (L) **M plug connector (M)** **DIN terminal (D)** **M8 connector (WO)**

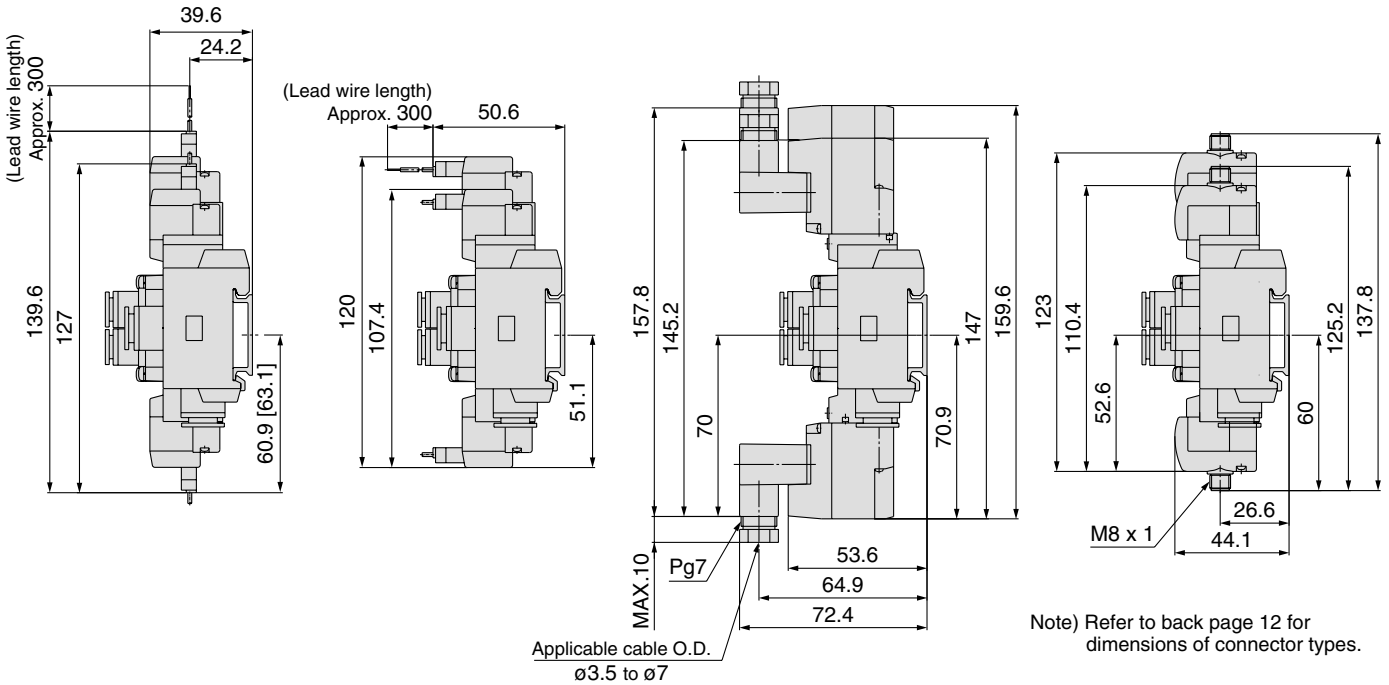

Note) Refer to back page 12 for dimensions of connector types.

Dimensions

SS5Y7-60-Stations U-Q

Stations	2 stations	3	4	5	6	7	8	9	10 stations
L1	135.5	148	173	185.5	210.5	223	248	260.5	285.5
L2	125	137.5	162.5	175	200	212.5	237.5	250	275
L3	103	122	141	160	179	198	217	236	255
L4	16	13	16	12.5	15.5	12.5	15.5	12	15

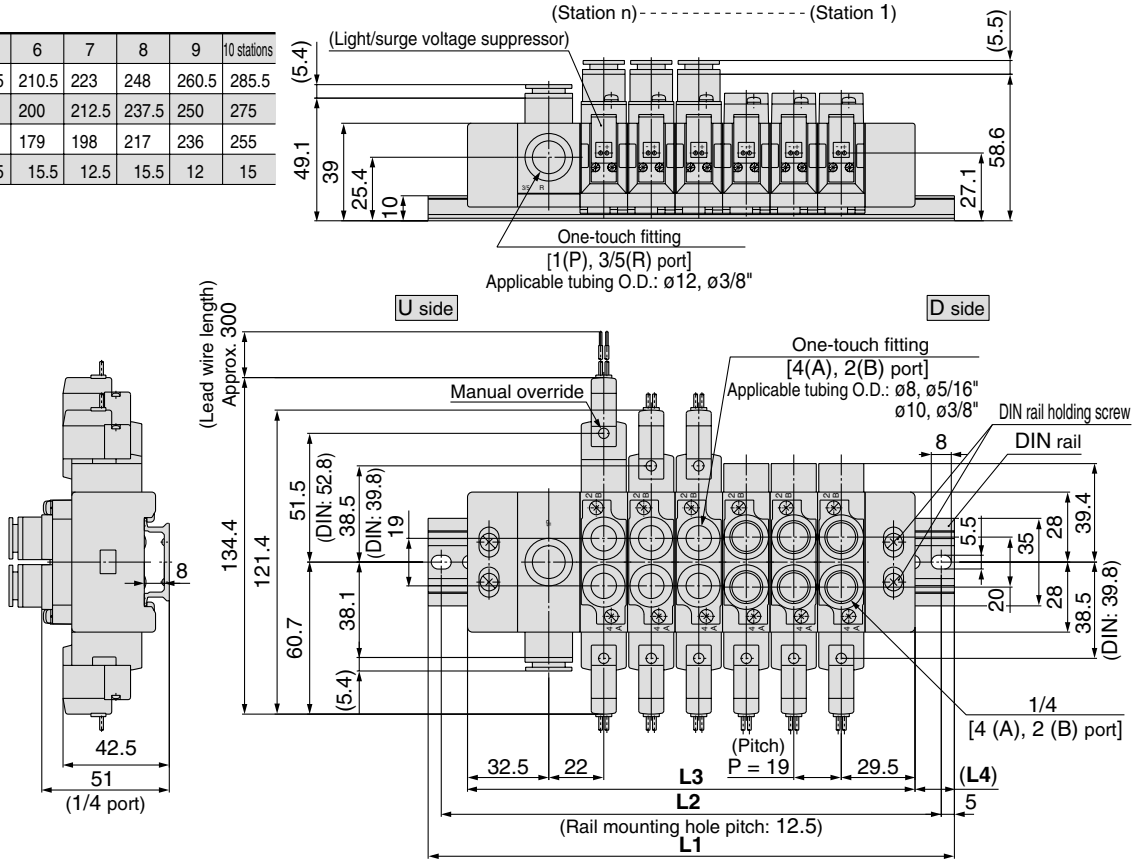

SS5Y7-60-Stations D-Q

Stations	2 stations	3	4	5	6	7	8	9	10 stations
L1	135.5	148	173	185.5	210.5	223	248	260.5	285.5
L2	125	137.5	162.5	175	200	212.5	237.5	250	275
L3	103	122	141	160	179	198	217	236	255
L4	16	13	16	12.5	15.5	12.5	15.5	12	15

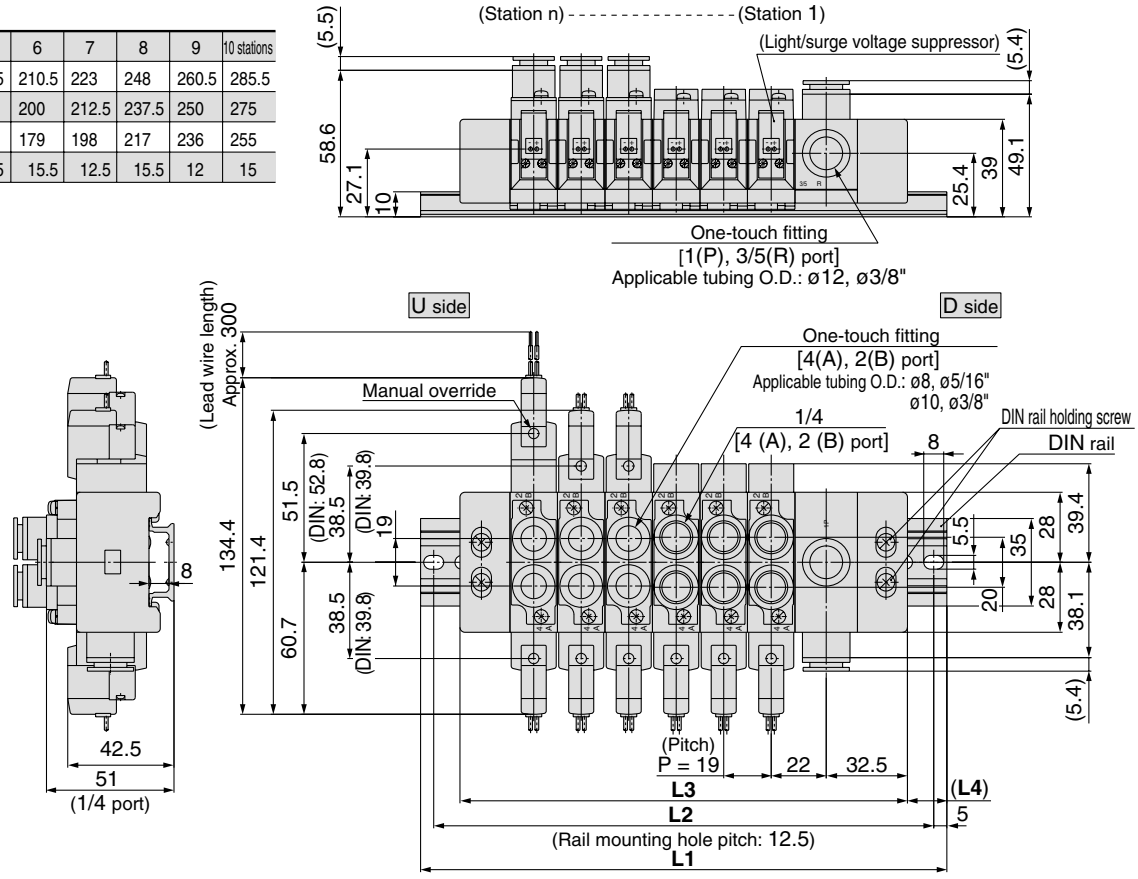

SS5Y7-60-[Stations] B-Q

Stations	2 stations	3	4	5	6	7	8 stations
L1	160.5	173	198	210.5	235.5	248	273
L2	150	162.5	187.5	200	225	237.5	262.5
L3	128	147	166	185	204	223	242
L4	16	13	16	12.5	15.5	12.5	15.5

Stations	9 stations	10	11	12	13	14	15 stations
L1	285.5	310.5	323	348	360.5	385.5	410.5
L2	275	300	312.5	337.5	350	375	400
L3	261	280	299	318	337	356	375
L4	12	15	12	15	11.5	14.5	17.5

Stations	16 stations	17	18	19	20 stations
L1	423	448	460.5	485.5	498
L2	412.5	437.5	450	475	487.5
L3	394	413	432	451	470
L4	14.5	17.5	14	17	14

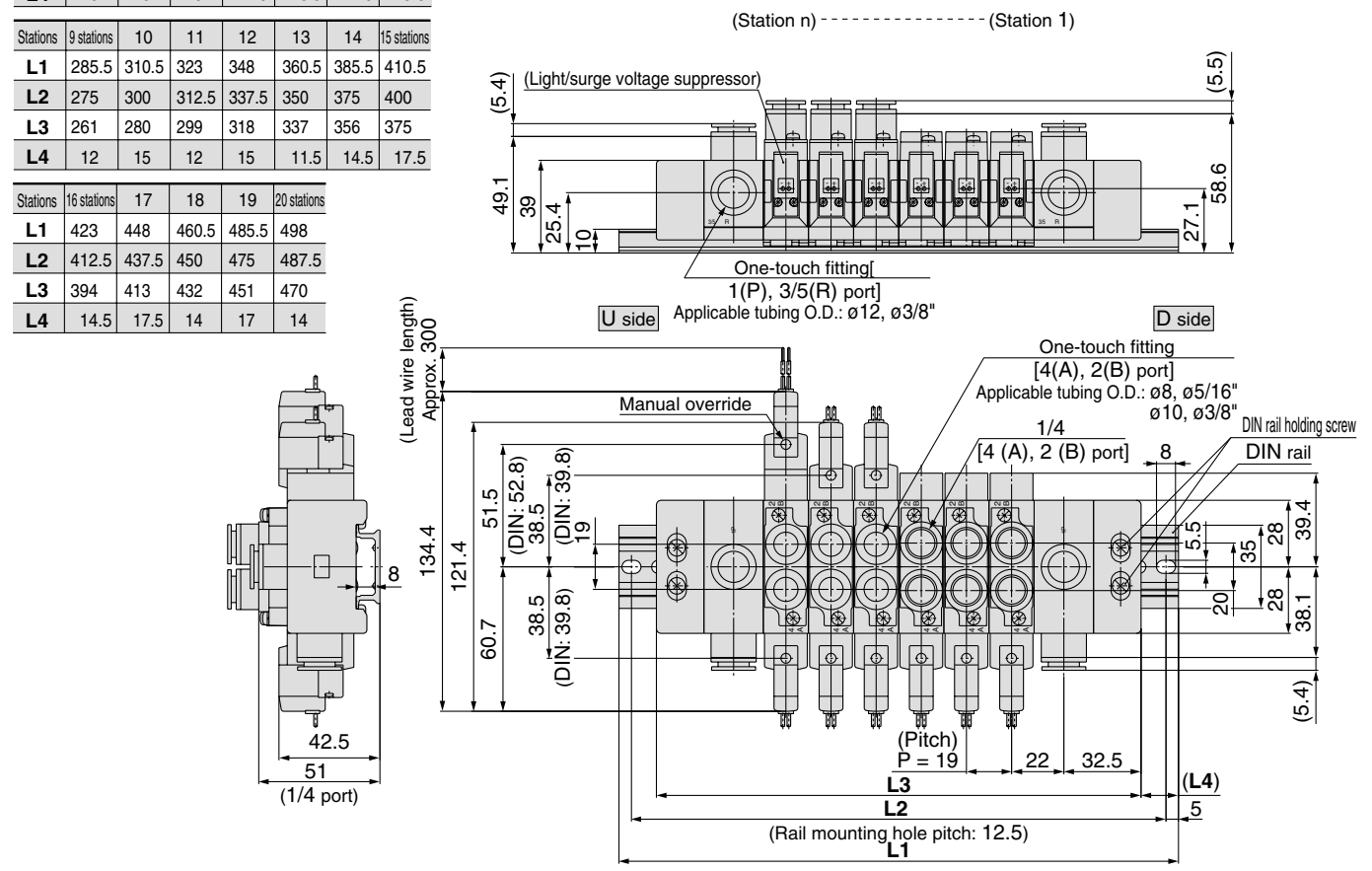

L plug connector (L) **M plug connector (M)** **DIN terminal (D)** **M8 connector (WO)**

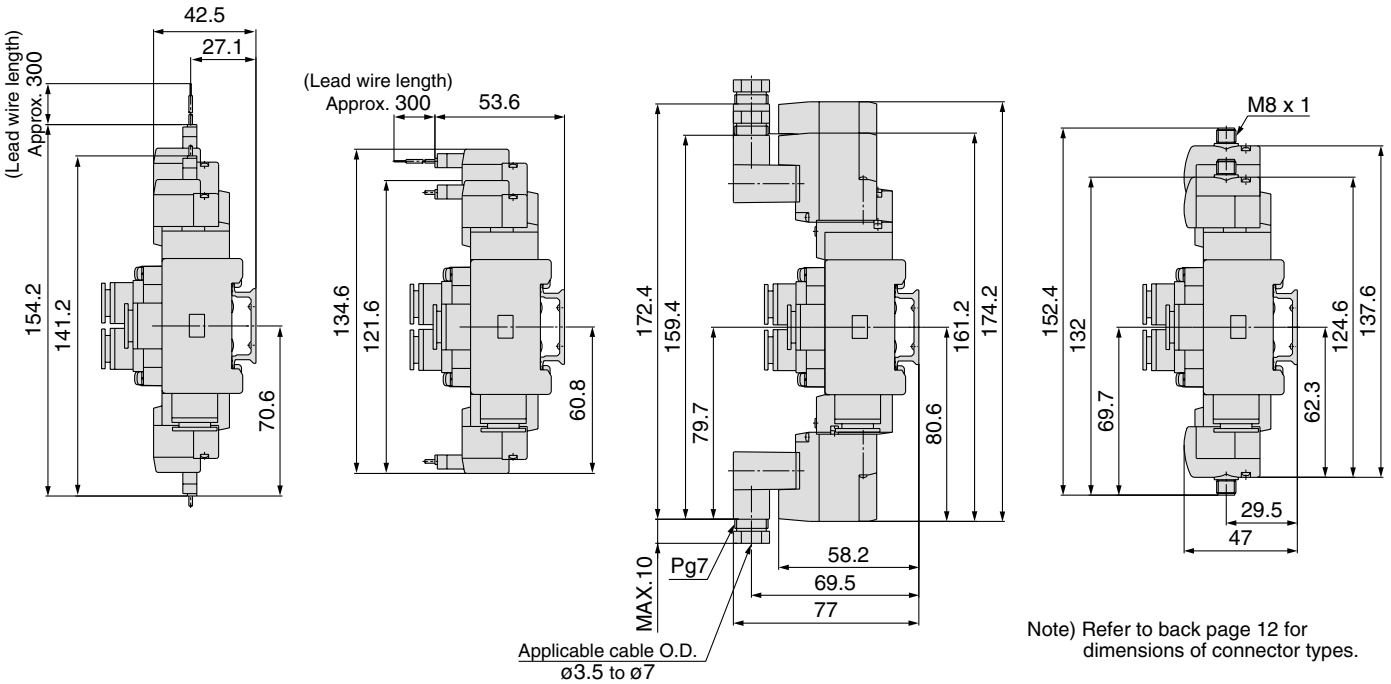

Note) Refer to back page 12 for dimensions of connector types.

DIN Rail Manifold Exploded View

SY3000
Type 60

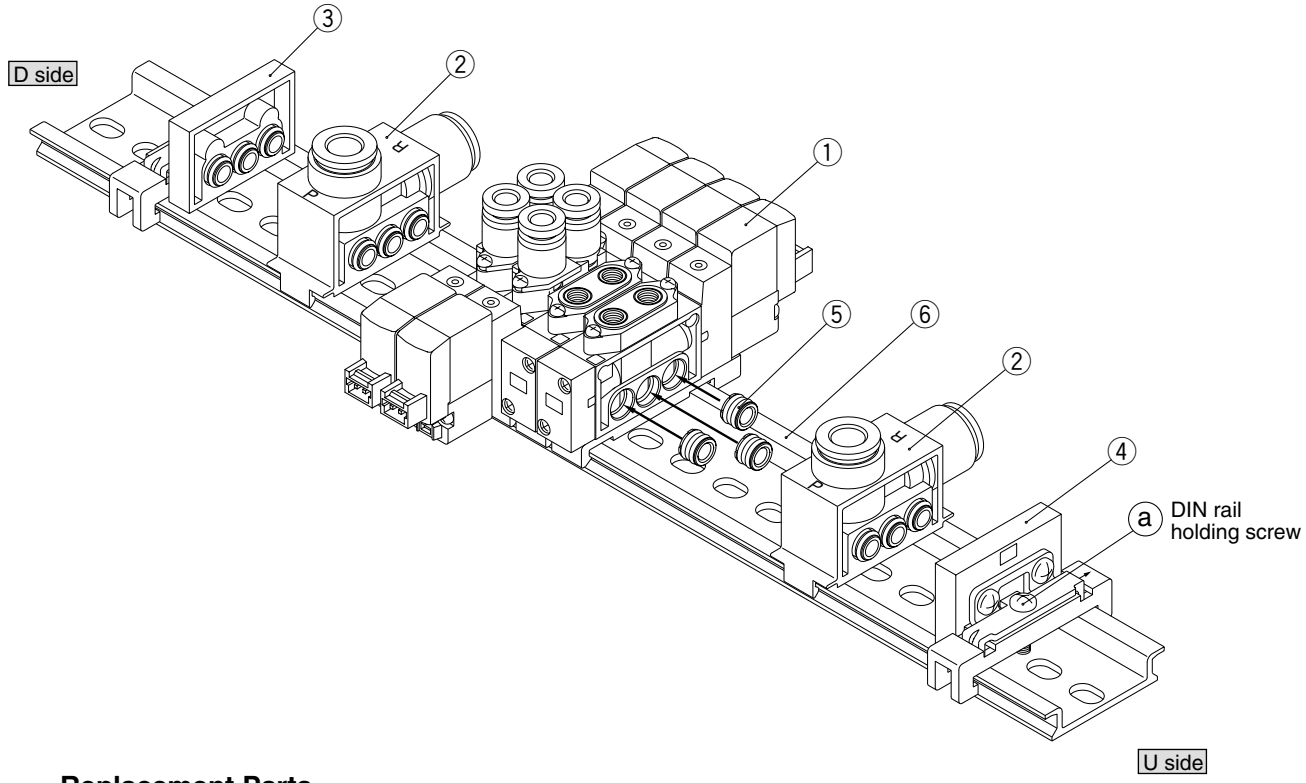

Replacement Parts

No.	Description	No.	Note
1	Valve	**SY3□60-□□-□-Q**	□ at the end of part number denotes A. B port size: M5, C4, C6, N3, N7. Includes bushing assembly (SY3000-52-5A) 3 pcs.
2	SUP/EXH block assembly	**SY3000-55-$\frac{1}{2}$A-Q**	P, R port (1: One-touch fitting for ø8, 2: One-touch fitting for ø5/16") Includes bushing assembly (SY3000-52-5A) 3 pcs.
3	End block assembly	**SY3000-56-1A-Q**	For D side (Bushing assembly: Not available for SY3000-52-5A)
4	End block assembly	**SY3000-56-1B-Q**	For U side (Bushing assembly: Not available for SY3000-52-5A)
5	Bushing assembly	**SY3000-52-5A**	
6	DIN rail	**VZ1000-11-1-□**	Refer to page 67.

SY5000
Type 60

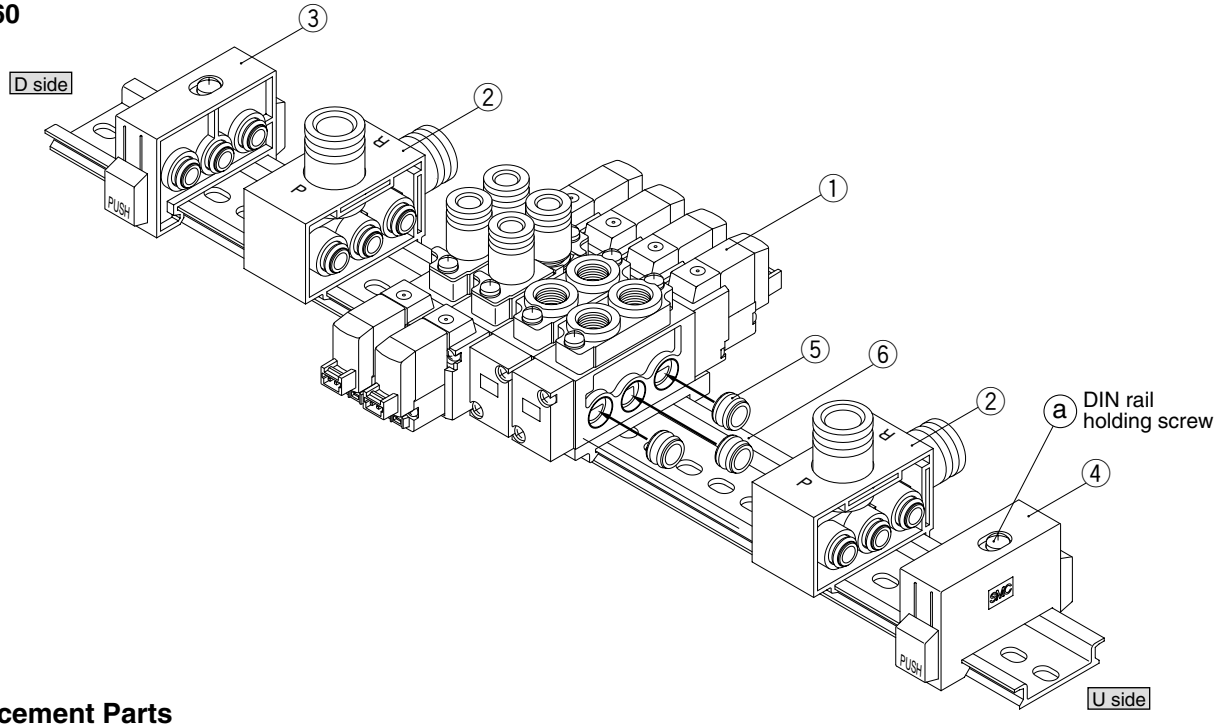

Replacement Parts

No.	Description	No.	Note
1	Valve	**SY5□60-□□-□-Q**	□ at the end of part number denotes A. B port size: 01, C4, C6, C8, N3, N7, N9. Includes bushing assembly (SY5000-52-3A) 3 pcs.
2	SUP/EXH block assembly	**SY5000-55-$\frac{1}{2}$A-Q**	P, R port (1: One-touch fitting for ø10, 2: One-touch fitting for ø3/8") Includes bushing assembly (SY5000-52-3A) 3 pcs.
3	End block assembly	**SY5000-56-1A-Q**	For D side (Bushing assembly: Not available for SY5000-52-3A)
4	End block assembly	**SY5000-56-1B-Q**	For U side (Bushing assembly: Not available for SY5000-52-3A)
5	Bushing assembly	**SY5000-52-3A**	
6	DIN rail	**VZ1000-11-1-□**	Refer to page 67.

How to Add Additional Valves to the DIN Rail
Valves can be added at any station on the rail.

1 **Loosen the manifold base clamping screw ⓐ.**

2 **Separate the valves at the point where more valves are to be added.**

3 **Mount the additional valves on the DIN rail as shown in Fig. 1**

4 **Connect them together while pressing the block assemblies toward each others, and tighten the holding screw ⓐ to fix them to the DIN rail.**

⚠Caution

Tightening torque

SY3000: 1 N·m

SY5000: 1.4 N·m

(While lightly holding the blocks after fixing an end block on one side, tighten the other end block for better sealing after no gap between valves is confirmed.)

- **Bushing assembly must be seated properly to each valve block in order to prevent air leaks from occurring.**
- **Refer to the fig. 2 when dismounting the valve from the DIN rail.**

Fig. 1 Manifold mounting procedure

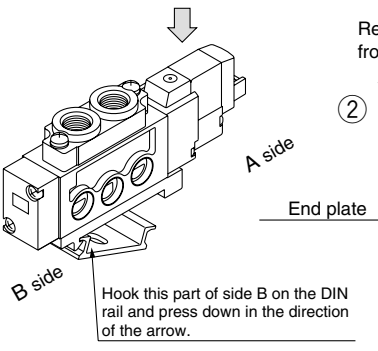

Fig. 2 Manifold dismounting procedure

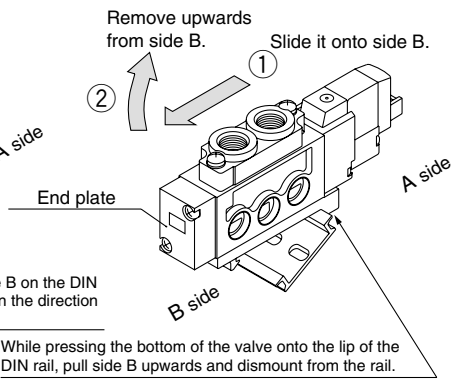

⚠Caution When clamping screw ⓐ of the end block is not sufficiently tightened during reassembly, air leakage may result. Before supplying air, check that there are no gaps between valves and that the end block is firmly secured to the DIN rain in order to ensure air supply without leakage.

DIN Rail Manifold Exploded View

SY7000

Type 60

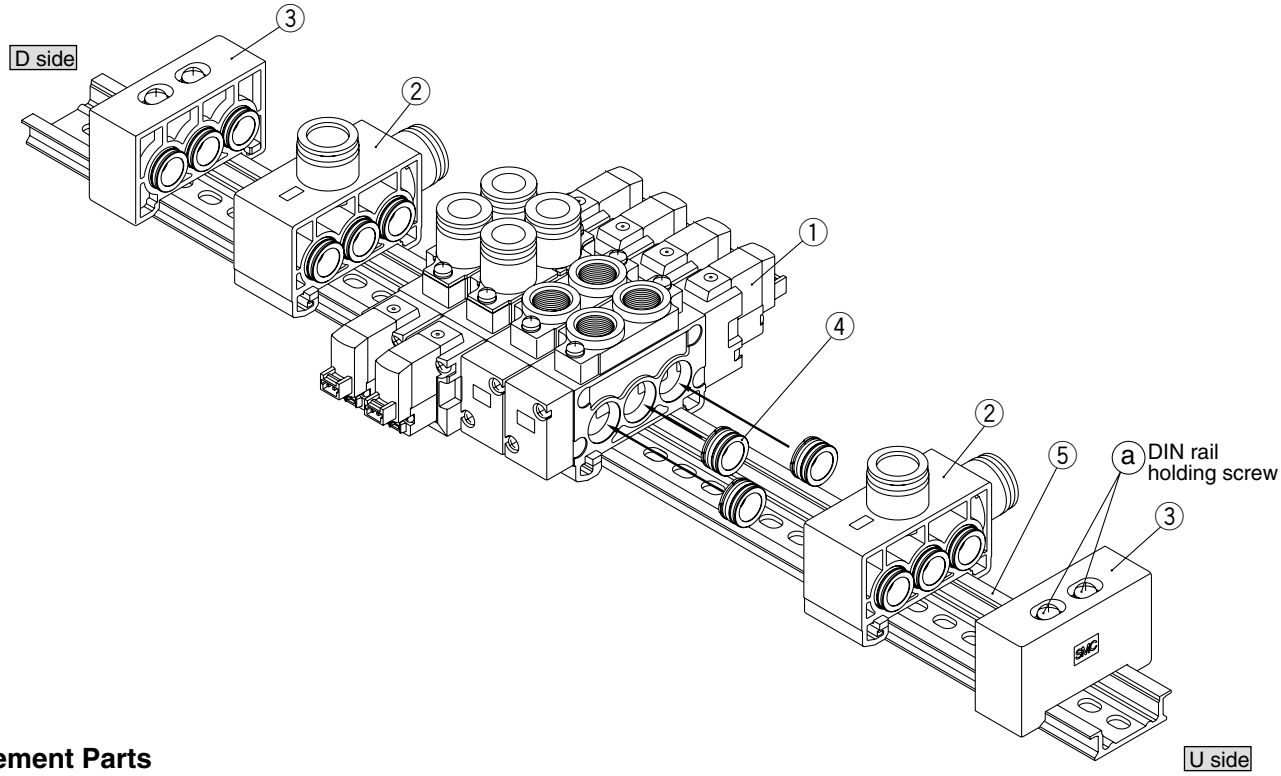

Replacement Parts

No.	Description	No.	Note
1	Valve	**SY7□60-□□-□-Q**	□ at the end of part number denotes A. B port size: 02, C8, C10, N9, N11. Includes bushing assembly (SY7000-70-1A) 3 pcs.
2	SUP/EXH block assembly	**SY7000-75-$^{1}_{3}$A-Q**	
3	End block assembly	**SY7000-56-1A-Q**	In common for D side and U side (Bushing assembly: Not available for SY7000-70-1A.)
4	Bushing assembly	**SY7000-70-1A**	
5	DIN rail	**VZ1000-11-4-□**	Refer to page 67.

How to Add Additional Valves to the DIN Rail

Valves can be added at any station on the rail.

1 **Loosen the rail holding screw ⓐ at both of 2 locations which holds the manifold base either in the U side or D side.**

When removing the end block assembly from the DIN rail, loosen the holding screws for DIN rail at first, then slide it to the edge of the rail.

2 **Separate the valves at the point where more valves are to be added.**

3 **Mount the additional valves on the DIN rail as shown in Fig. 1.**

4 **Connect them together while pressing the block assemblies toward each others, and tighten the 2 holding screws ⓐ for DIN rail alternately (2 to 3 times) with the prescribed torque (1.4 N·m) to fix them to the DIN rail.**

⚠Caution

Tightening torque

SY7000: 1.4 N·m

(While lightly holding the blocks after fixing an end block on one side, tighten the other end block for better sealing after no gap between valves is confirmed.)

- **Bushing assembly must be seated properly to each valve block in order to prevent air leaks from occurring.**
- **Refer to the fig. 2 when dismounting the valve from the DIN rail.**

Fig. 1 Manifold mounting procedure

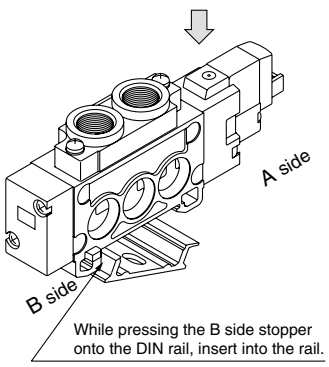

Fig. 2 Manifold dismounting procedure

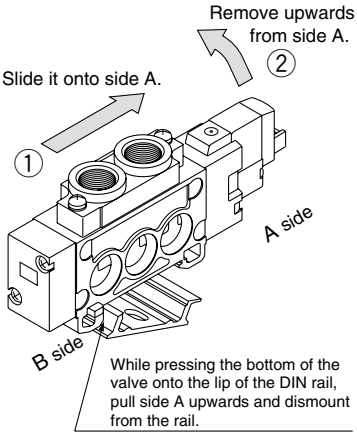

⚠Caution When clamping screw ⓐ of the end block is not sufficiently tightened during reassembly, air leakage may result. Before supplying air, check that there are no gaps between valves and that the end block is firmly secured to the DIN rain in order to ensure air supply without leakage.

Type 41
Type 42

5 Port Solenoid Valve
Series SY3000/5000/7000
Base Mounted
Bar Stock Type/Individual Wiring

How to Order Manifold

Type 41/Compact style

SS5Y 5 — 41 — 05 — C8 □ -Q

Manifold series

3	SY3000
5	SY5000

Stations

02	2 stations
⋮	⋮
20	20 stations

∗ This also includes the number of blanking plate assemblies.

Thread type

-	Rc
F	G
N	NPT
T	NPTF

∗ Except for M5

A, B port size

Thread piping

Symbol	Port size	Applicable series
M5	M5	SY3000
01	1/8	SY5000

One-touch fitting (Metric size)

Symbol	Port size	Applicable series
C4	One-touch fitting for ø4	SY3000
C6	One-touch fitting for ø6	
C6	One-touch fitting for ø6	SY5000
C8	One-touch fitting for ø8	

One-touch fitting (Inch size)

Symbol	Port size	Applicable series
N3	One-touch fitting for ø5/32"	SY3000
N7	One-touch fitting for ø1/4"	
N7	One-touch fitting for ø1/4"	SY5000
N9	One-touch fitting for ø5/16"	

Type 42/External pilot capable

SS5Y 5 — 42 — 05 — C8 □ -Q

Manifold series

3	SY3000
5	SY5000
7	SY7000

Stations

02	2 stations
⋮	⋮
20	20 stations

Thread type

-	Rc
F	G
N	NPT
T	NPTF

A, B port size

Thread piping

Symbol	Port size	Applicable series
01	1/8	SY3000
02	1/4	SY5000
02	1/4	SY7000

One-touch fitting (Metric size)

Symbol	Port size	Applicable series
C4	One-touch fitting for ø4	SY3000
C6	One-touch fitting for ø6	
C6	One-touch fitting for ø6	SY5000
C8	One-touch fitting for ø8	
C10	One-touch fitting for ø10	SY7000

One-touch fitting (Inch size)

Symbol	Port size	Applicable series
N3	One-touch fitting for ø5/32"	SY3000
N7	One-touch fitting for ø1/4"	
N7	One-touch fitting for ø1/4"	SY5000
N9	One-touch fitting for ø5/16"	
N11	One-touch fitting for ø3/8"	SY7000

How to Order Valve Manifold Assembly (Example)

Example

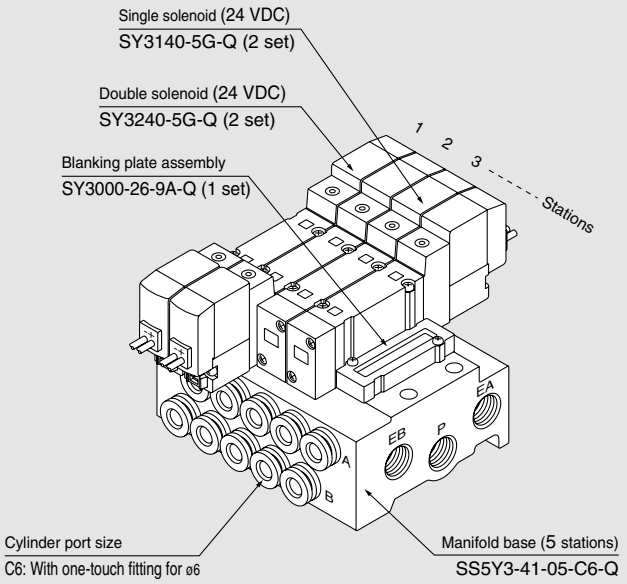

SS5Y3-41-05-C6-Q **1 set (Type 41, 5 stations manifold base part no.)**
∗ **SY3240-5G-Q** **2 sets (Double solenoid part no.)**
∗ **SY3140-5G-Q** **2 sets (Single solenoid part no.)**
∗ **SY3000-26-9A-Q** **1 set (Blanking plate assembly part no)**

→ The asterisk denotes the symbol for assembly.
Prefix it to the part nos. of the solenoid valve, etc.

Add the valve and option part number under the manifold base part number. In the case of complex arrangement, specify them on the manifold specification sheet.

How to Order Valve

SY 5 2 40 □ □ — 5 L □ □ -Q

Series

3	SY3000
5	SY5000
7	SY7000

Type of actuation

1	2 position single
2	2 position double
3	3 position closed center
4	3 position exhaust center
5	3 position pressure center

Pilot type

-	Internal pilot
R	External pilot

Coil specifications

-	Standard
T	With power saving circuit (24 VDC, 12 VDC only)

∗ Power saving circuit is not available in the case of D, DO or W□ type.

Rated voltage

For DC

5	24 VDC
6	12 VDC
V	6 VDC
S	5 VDC
R	3 VDC

For AC (50/60 Hz)

1	100 VAC
2	200 VAC
3	110 VAC [115 VAC]
4	220 VAC [230 VAC]

∗ DC specifications of Type D and DO is only available with 12 and 24 VDC.
∗ AC specification is only available with D and DO type.

Manual override

-	Non-locking push type
D	Push-turn locking slotted type
E	Push-turn locking lever type

Light/surge voltage suppressor

Electrical entry for G, H, L, M, W

-	Without light/surge voltage suppressor
S	With surge voltage suppressor
Z	With light/surge voltage suppressor
R	With surge voltage suppressor (Non-polar type)
U	With light/surge voltage suppressor (Non-polar type)

∗ Power saving circuit is only available in the "Z" type.

Electrical entry for D (SY5000/7000 only)

-	Without light/surge voltage suppressor
S	With surge voltage suppressor (Non-polar type)
Z	With light/surge voltage suppressor (Non-polar type)

∗ DOZ is not available.
∗ For AC voltage valves there is no "S" option. It is already built-in to the rectifier circuit.

Electrical entry

24, 12, 6, 5, 3 VDC			24, 12 VDC/ 100, 110, 200, 220 VAC	24, 12, 6, 5, 3 VDC
Grommet	**L plug connector**	**M plug connector**	**DIN terminal** Note2	**M8 connector** ∗
G: Lead wire length 300 mm lead **H:** Lead wire length 600 mm	**L:** With lead wire (Length 300 mm) **LN:** Without lead wire **LO:** Without	**M:** With lead wire (Length 300 mm) **MN:** Without lead	**D:** With connector **DO:** Without connector	**WO:** Without connector cable **W□:** With connector cable Note 1)

∗ LN, MN type: with 2 sockets.
∗ DIN terminal type "Y" which conforms to EN-175301-803C (former DIN43650C) is also available. For details, refer to page 210.
∗ For connector cable of M8 connector, refer to back page 12.
∗ Connector M8 type "WA" conforming to IEC 60947-5-2 standard, is also available. For details, see page 211.
Note 1) Enter the cable length symbols in □. Please be sure to fill in the blank referring to back page 13.
Note 2) SY5000/7000 only.

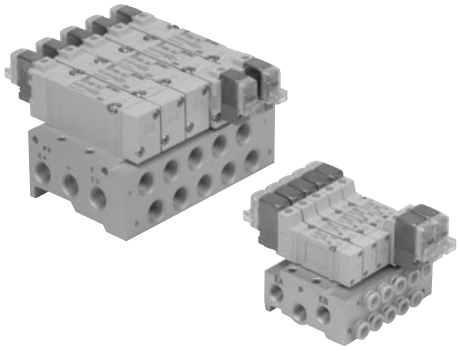

Manifold Specifications

Model		SS5Y3-41	SS5Y3-42	SS5Y5-41	SS5Y5-42	SS5Y7-42
Applicable valve		SY3□40		SY5□40		SY7□40
Manifold type		Single base/B mount				
P(SUP)/R(EXH)		Common SUP, Common EXH				
Valve stations		2 to 20 stations Note 1)				
A, B port Porting specifications	Location	Base				
	Direction	Side				
Port size	P, EA, EB port	1/8		1/4		1/4
	A, B port	M5, C4 (One-touch fitting for ø4) C6 (One-touch fitting for ø6)	1/8 C4 (One-touch fitting for ø4) C6 (One-touch fitting for ø6)	1/8 C6 (One-touch fitting for ø6) C8 (One-touch fitting for ø8)	1/4 C6 (One-touch fitting for ø6) C8 (One-touch fitting for ø8)	1/4 C10 (One-touch fitting for ø10)
Manifold base weight W (g) n: Stations		W = 30n + 50	W = 37n + 63	W = 61n + 101	W = 79n + 127	W = 100n + 151

Note 1) For more than 10 stations (more than 5 stations in case of SS5Y7), supply pressure to P port on both sides and exhaust from EA/EB port on both sides.

Note 2) Refer to "Manifold Option" on page 109.

Flow Characteristics

Model	Port size		Flow characteristics							
	1, 5, 3 (P, EA, EB)	4, 2 (A, B)	1 → 4/2 (P → A/B)				4/2 → 5/3 (A/B → EA/EB)			
			C (dm³/(s·bar))	b	Cv	Q[ℓ/min(ANR)]*	C (dm³/(s·bar))	b	Cv	Q[ℓ/min(ANR)]*
SS5Y3-41	1/8	C6	0.75	0.19	0.18	179	0.81	0.23	0.20	197
SS5Y3-42	1/8	C6	0.75	0.20	0.18	180	0.82	0.20	0.20	196
SS5Y5-41	1/4	C8	1.8	0.23	0.44	439	1.9	0.16	0.45	445
SS5Y5-42	1/4	C8	1.9	0.20	0.46	455	1.9	0.12	0.43	436
SS5Y7-42	1/4	C10	3.0	0.25	0.75	740	3.0	0.12	0.66	688

Note) The value is for manifold base with 5 stations and individually operated 2 position type.

* These values have been calculated according to ISO6358 and represent the flow rate measured in standard conditions at an upstream pressure of 0.6 MPa (relative pressure) and a differential pressure of 0.1MPa.

SY3000: SS5Y3-41-[Stations]-M5, C4,N3 C6,N7 [ ] -Q

Grommet (G) **With interface regulator (with gauge)**

For M5

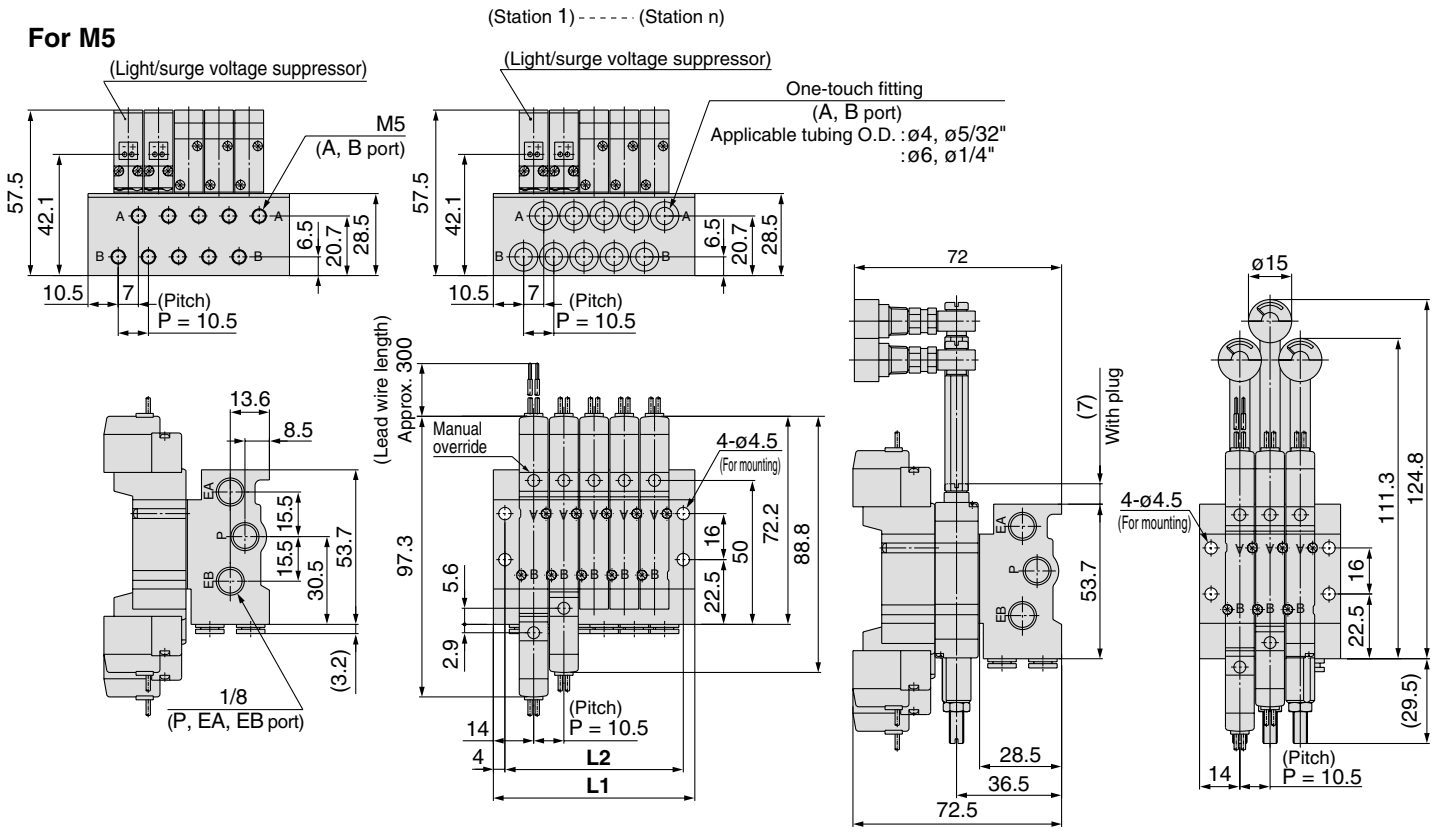

L plug connector (L)

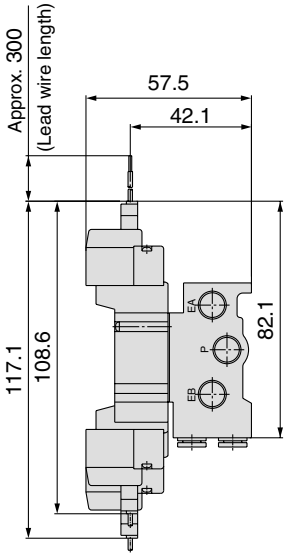

M plug connector (M)

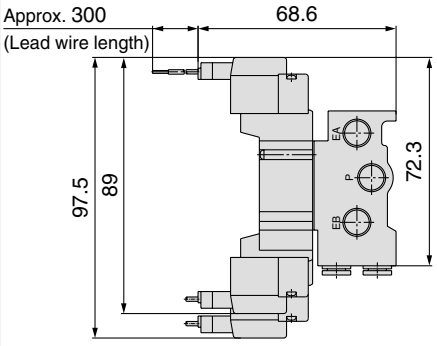

M8 connector (WO)

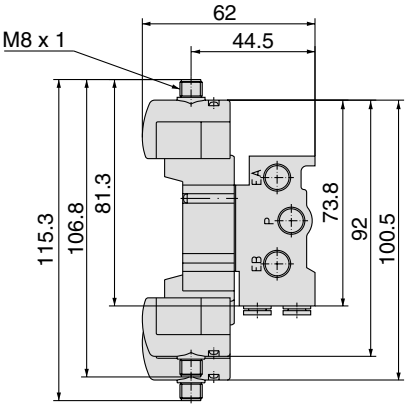

Note) Refer to back page 12 for dimensions of connector types.

Stations n	2 stations	3	4	5	6	7	8	9	10	11	12	13	14	15	16	17	18	19	20 stations
L1	38.5	49	59.5	70	80.5	91	101.5	112	122.5	133	143.5	154	164.5	175	185.5	196	206.5	217	227.5
L2	30.5	41	51.5	62	72.5	83	93.5	104	114.5	125	135.5	146	156.5	167	177.5	188	198.5	209	219.5

SY5000: SS5Y5-41-[Stations]-01, C6, N7 / C8, N9 [ ]-Q

Grommet (G)

For 1/8

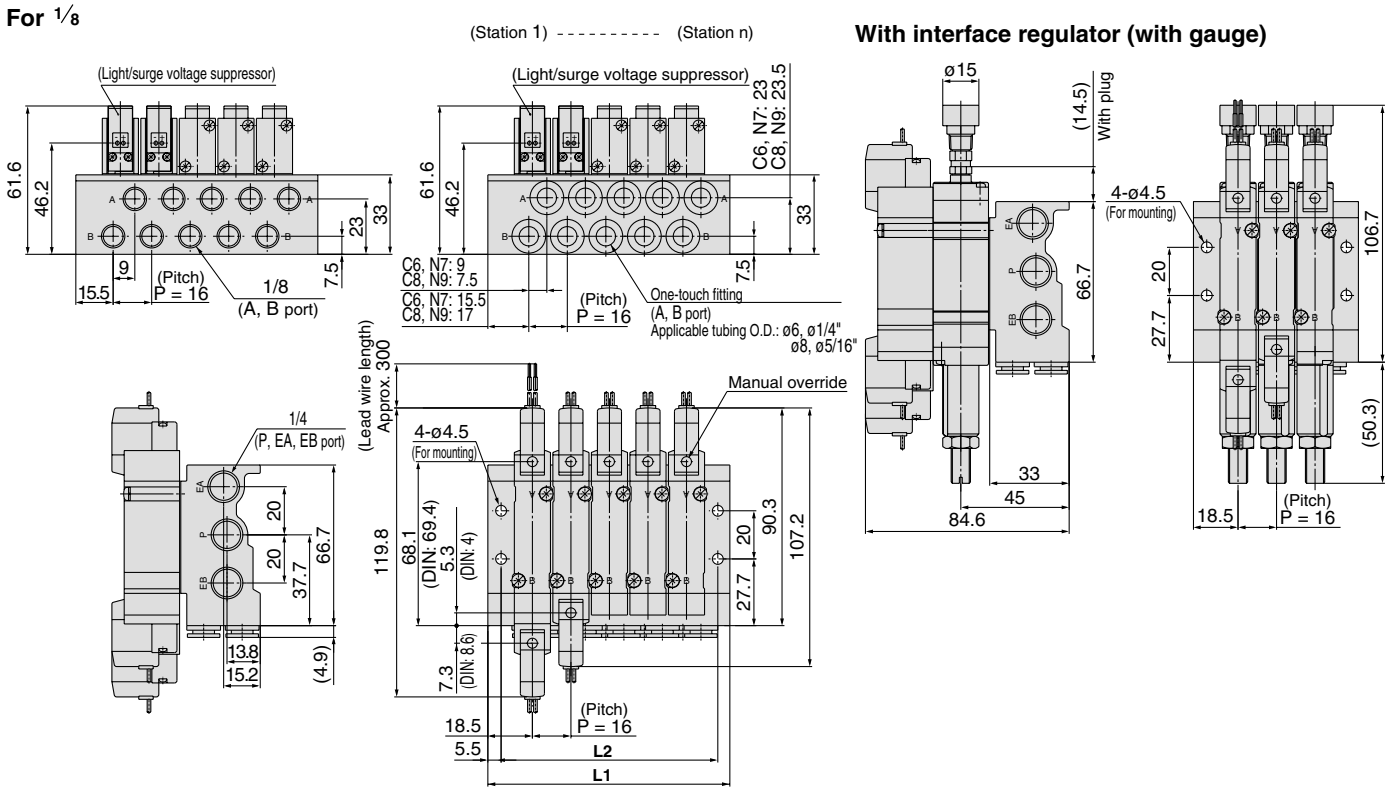

L plug connector: L

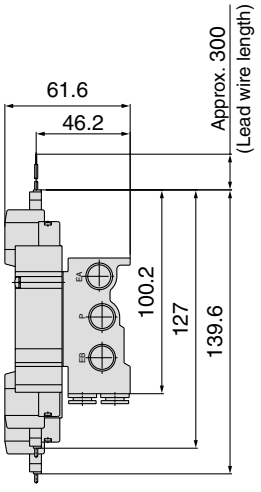

M plug connector: M

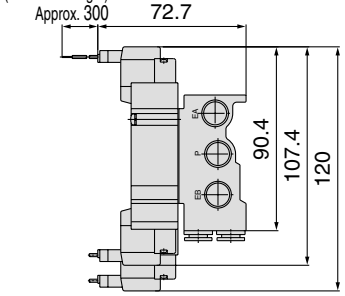

DIN terminal (D)

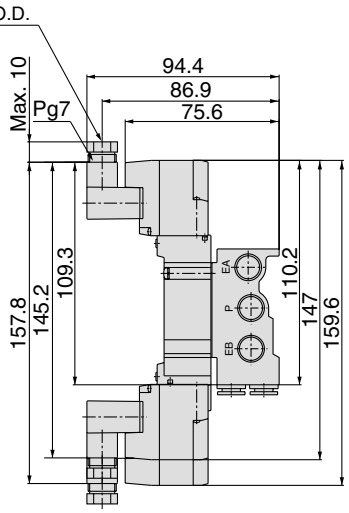

M8 connector (WO)

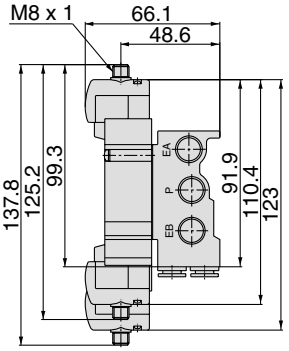

Note) Refer to back page 12 for dimensions of connector types.

Stations n	2 stations	3	4	5	6	7	8	9	10	11	12	13	14	15	16	17	18	19	20 stations
L1	52.5	68.5	84.5	100.5	116.5	132.5	148.5	164.5	180.5	196.5	212.5	228.5	244.5	260.5	276.5	292.5	308.5	324.5	340.5
L2	42	58	74	90	106	122	138	154	170	186	202	218	234	250	266	282	298	314	330

SY3000: SS5Y3-42-[Stations]-[C4, N3 / C6, N7][ ]-Q

Grommet (G)

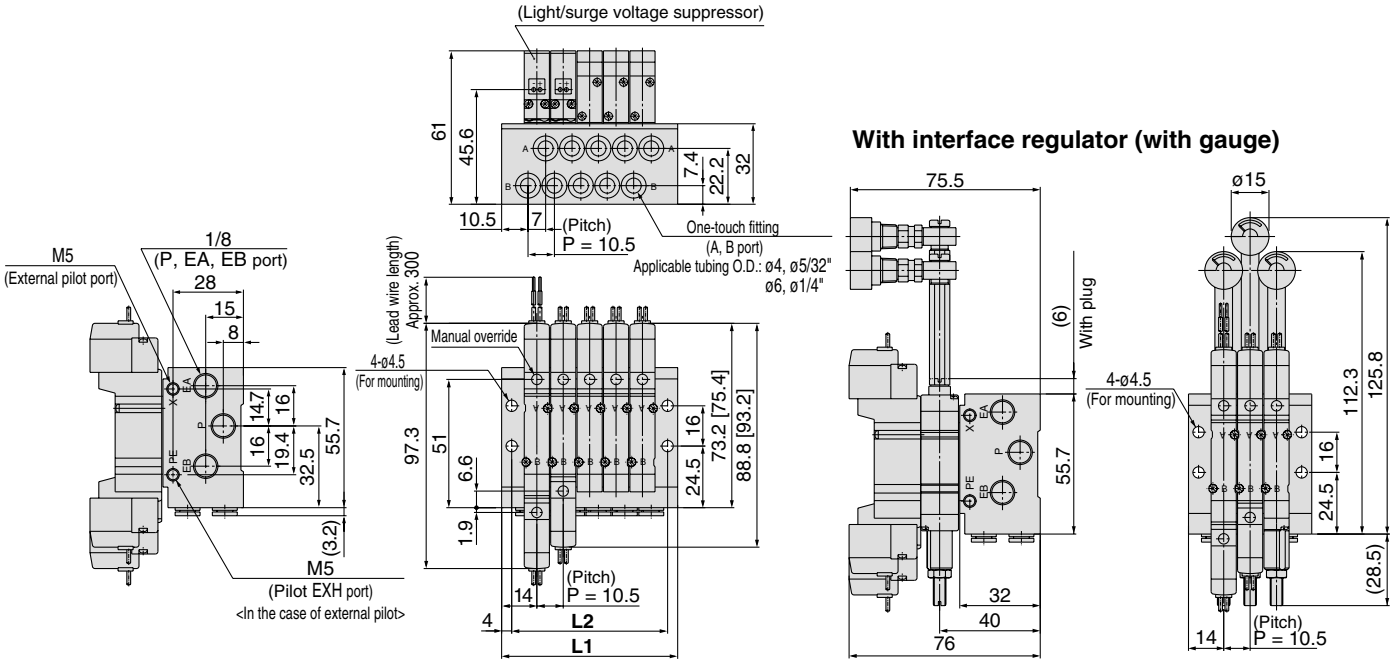

L plug connector (L)

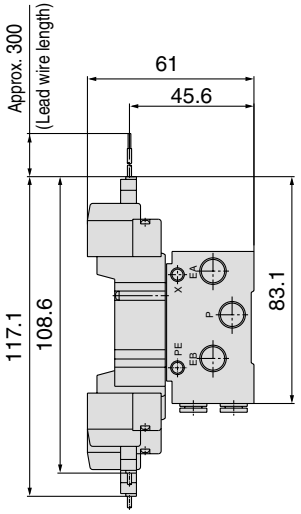

M plug connector (M)

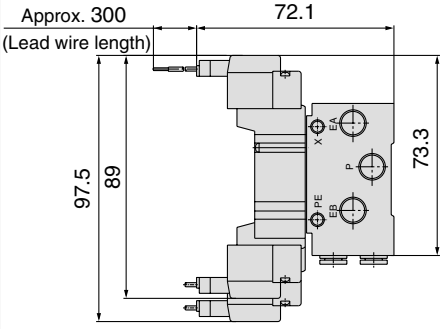

M8 connector (WO)

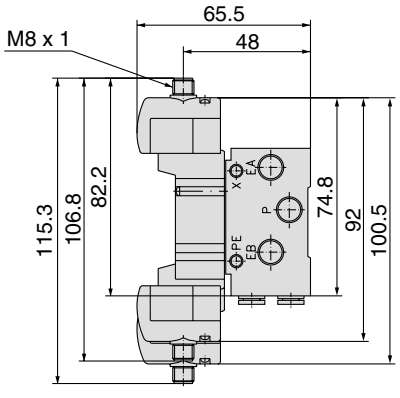

Note) Refer to back page 12 for dimensions of connector types.

Stations n	2 stations	3	4	5	6	7	8	9	10	11	12	13	14	15	16	17	18	19	20 stations
L1	38.5	49	59.5	70	80.5	91	101.5	112	122.5	133	143.5	154	164.5	175	185.5	196	206.5	217	227.5
L2	30.5	41	51.5	62	72.5	83	93.5	104	114.5	125	135.5	146	156.5	167	177.5	188	198.5	209	219.5

SY3000: SS5Y3-42-[Stations]-01[ ]-Q

Grommet (G)

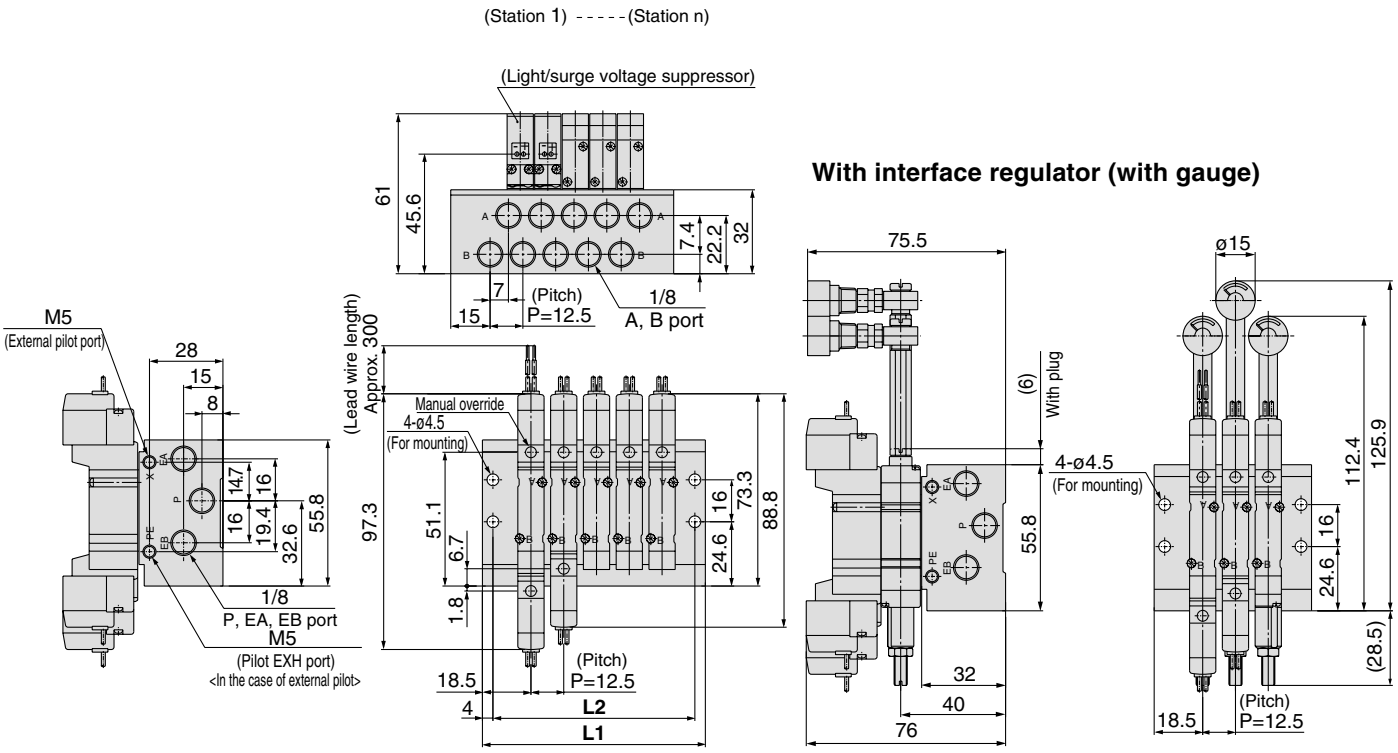

L plug connector (L)

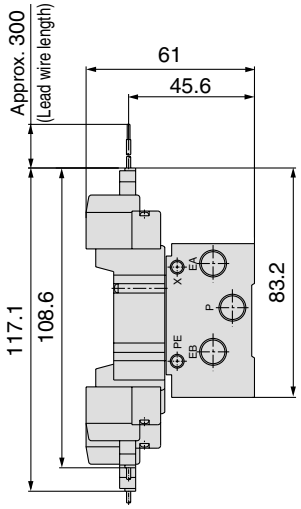

M plug connector (M)

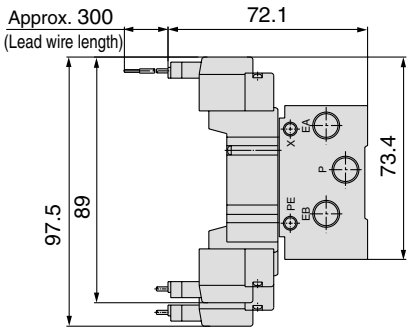

M8 connector (WO)

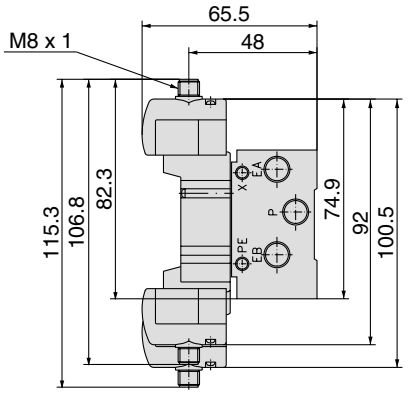

Note) Refer to back page 12 for dimensions of connector types.

Stations n	2 stations	3	4	5	6	7	8	9	10	11	12	13	14	15	16	17	18	19	20 stations
L1	47.5	60	72.5	85	97.5	110	122.5	135	147.5	160	172.5	185	197.5	210	222.5	235	247.5	260	272.5
L2	39.5	52	64.5	77	89.5	102	114.5	127	139.5	152	164.5	177	189.5	202	214.5	227	239.5	252	264.5

SY5000: SS5Y5-42-[Stations]-[C4, N3 / C6, N7][ ]-Q

Grommet (G)

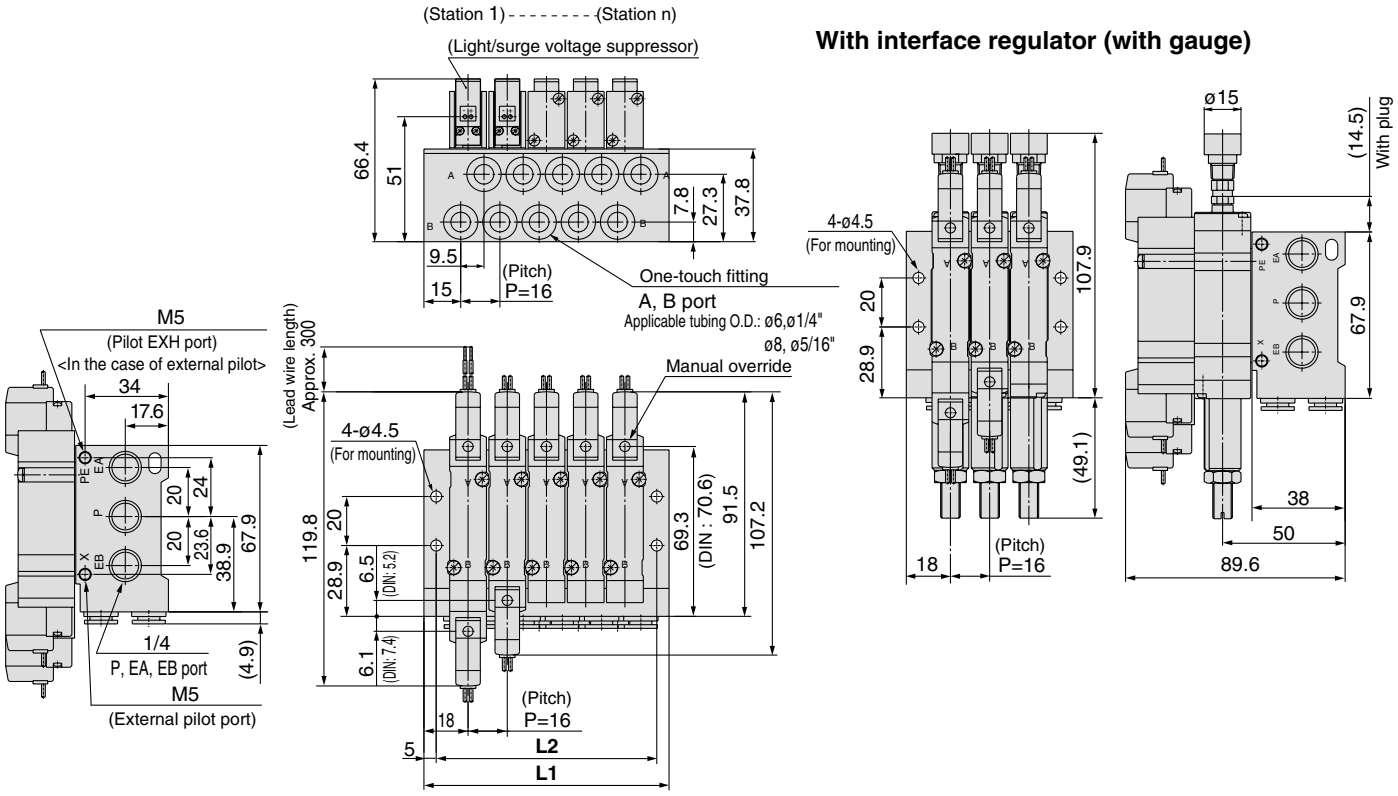

L plug connector (L) M plug connector (M) DIN terminal (D) M8 connector (WO)

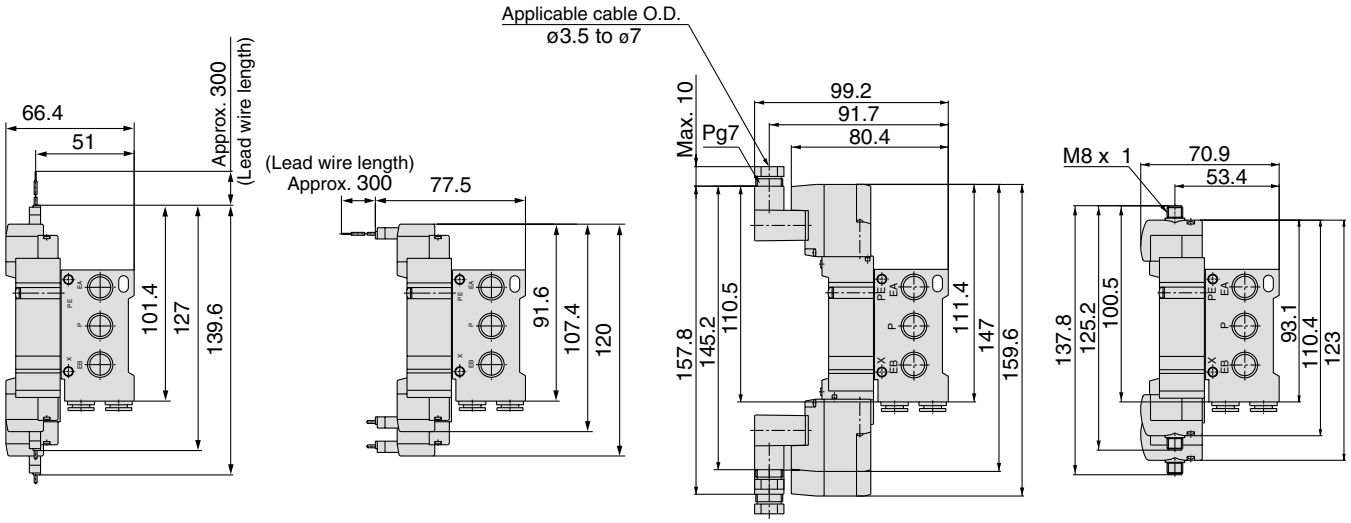

Note) Refer to back page 12 for dimensions of connector types.

Stations n	2 stations	3	4	5	6	7	8	9	10	11	12	13	14	15	16	17	18	19	20 stations
L1	52	68	84	100	116	132	148	164	180	196	212	228	244	260	276	292	308	324	340
L2	42	58	74	90	106	122	138	154	170	186	202	218	234	250	266	282	298	314	330

SY5000: SS5Y5-42-Stations-02□-Q

Grommet (G)

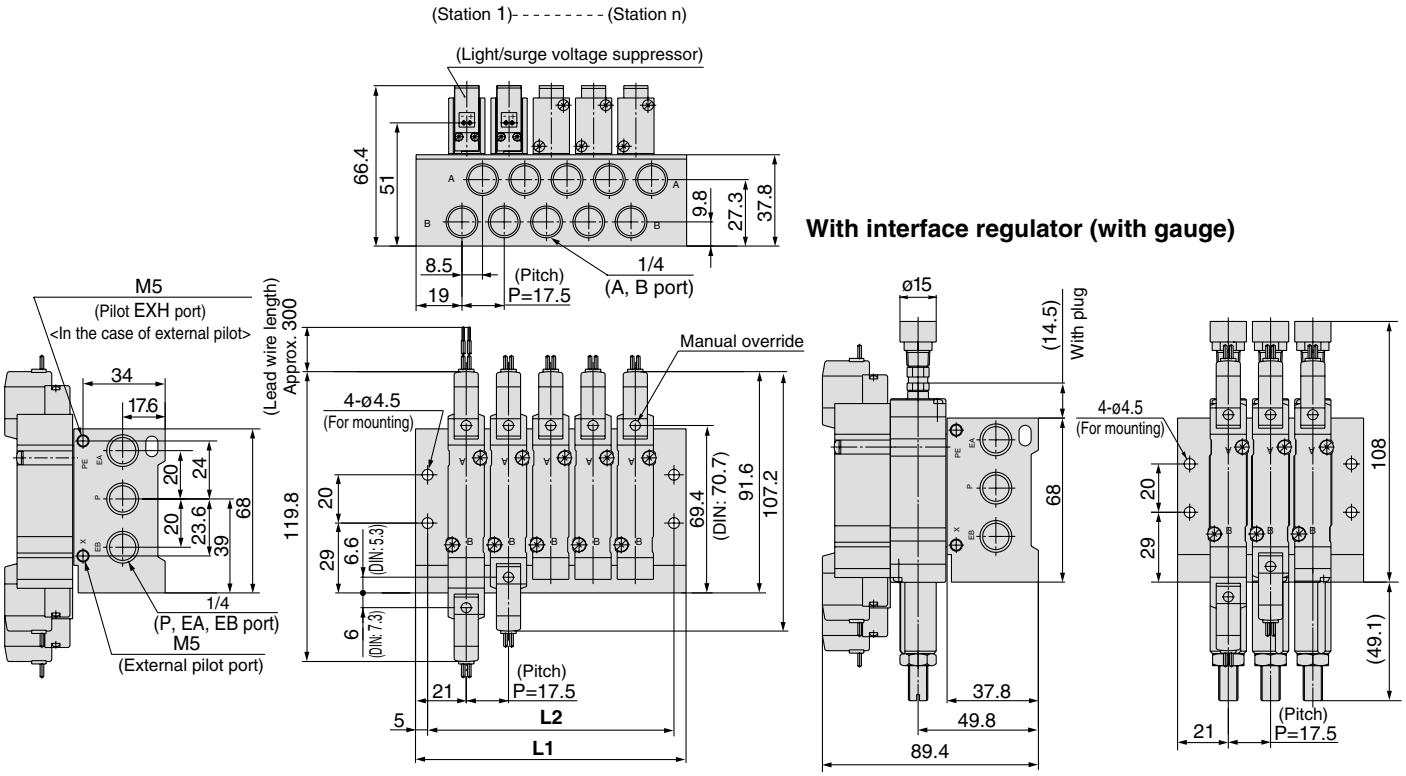

L plug connector (L)

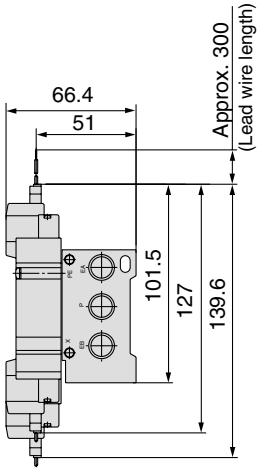

M plug connector (M)

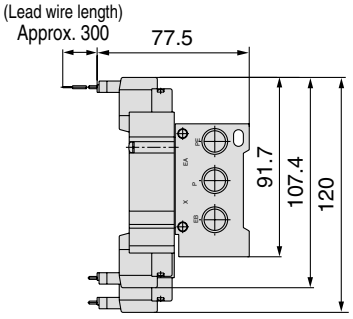

DIN terminal (D)

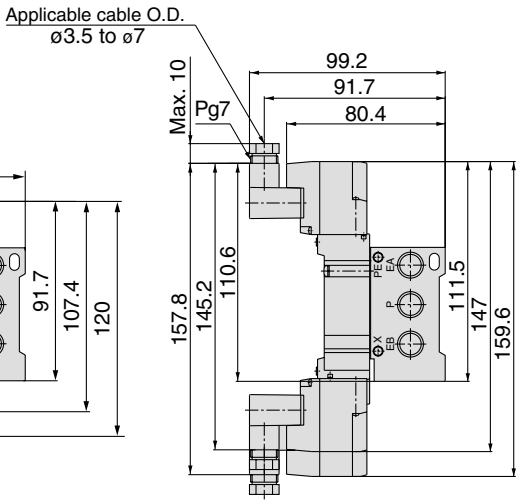

M8 connector (WO)

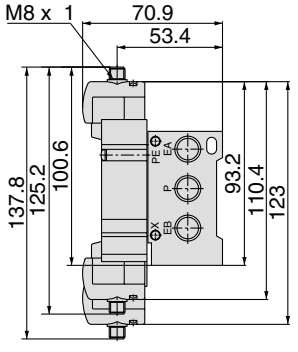

Note) Refer to back page 12 for dimensions of connector types.

Stations n	2 stations	3	4	5	6	7	8	9	10	11	12	13	14	15	16	17	18	19	20 stations
L1	59.5	77	94.5	112	129.5	147	164.5	182	199.5	217	234.5	252	269.5	287	304.5	322	339.5	357	374.5
L2	49.5	67	84.5	102	119.5	137	154.5	172	189.5	207	224.5	242	259.5	277	294.5	312	329.5	347	364.5

SY7000: SS5Y7-42-[Stations]-02, C10, N11[ ]-Q

Grommet (G)

(Station 1)- - - - - - - - - (Station n)

For 1/4

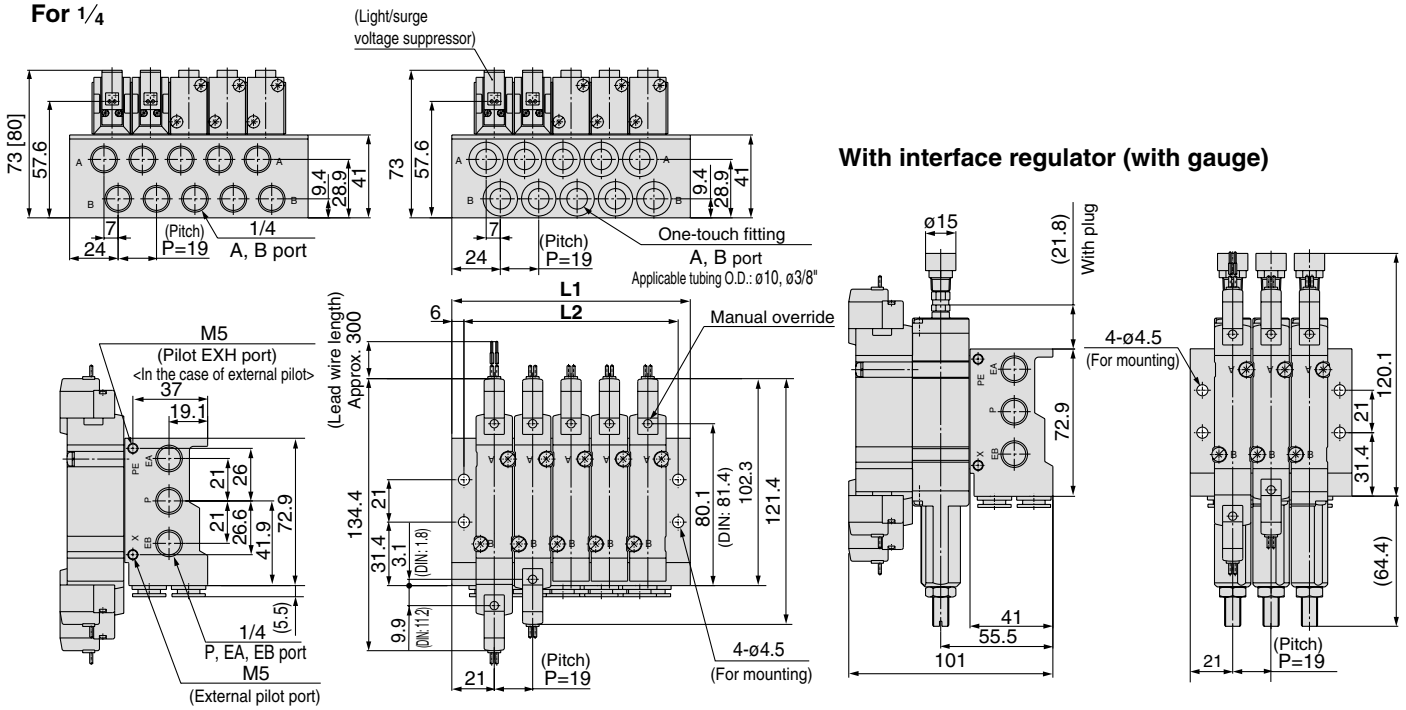

L plug connector (L)

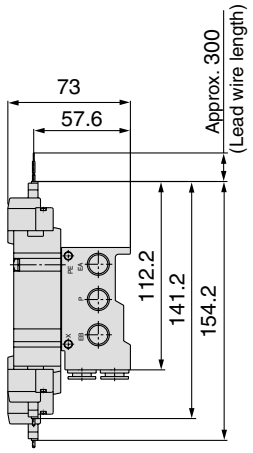

M plug connector (M)

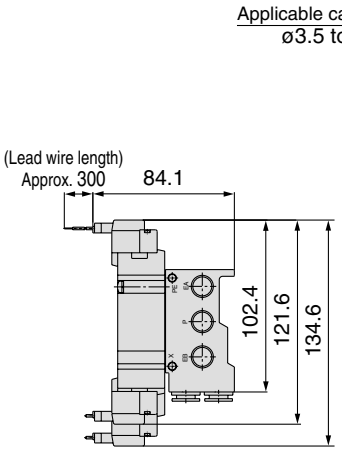

DIN terminal (D)

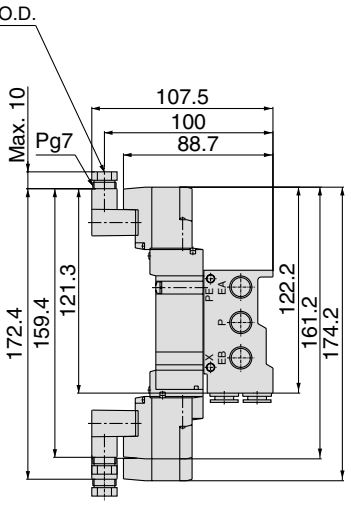

M8 connector (WO)

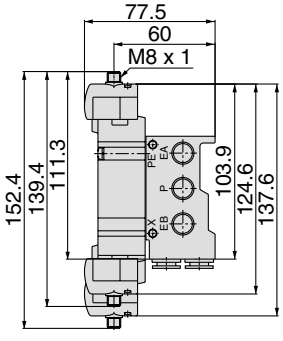

Note) Refer to back page 12 for dimensions of connector types.

Stations n	2 stations	3	4	5	6	7	8	9	10	11	12	13	14	15	16	17	18	19	20 stations
L1	61	80	99	118	137	156	175	194	213	232	251	270	289	308	327	346	365	384	403
L2	49	68	87	106	125	144	163	182	201	220	239	258	277	296	315	334	353	372	391

5 Port Solenoid Valve
Series SY9000
Base Mounted
Stacking Type/Individual Wiring

Type 43

How to Order Manifold

SS5Y 9 – 43 – 05 U [ ] – C8 [ ] – [ ] -Q

Manifold series

9	SY9000

Valve stations

Symbol	Stations
02	2 stations
⋮	⋮
20	20 stations

∗ This also includes the number of blanking plate assemblies.

P, R port outlets

Symbol	Port outlet	Applicable stations
U	U side	2 to 10 stations
D	D side	
B	Both sides	2 to 20 stations

SUP/EXH block assembly specifications

Symbol	Specifications
-	Standard/Internal pilot specification
R	External pilot specification
S	Internal pilot/Built-in silencer
RS	External pilot/Built-in silencer

Thread type

-	Rc
F	G
N	NPT
T	NPTF

Option

Symbol	Mounting
-	Direct mounting
D	DIN rail mounting (with DIN rail)
DO	DIN rail mounting (without DIN rail)
D∗	When a longer DIN rail is desired than the specified stations, specify the station number to be required into ∗ mark.

A, B port size

Thread piping

Symbol	Port size
02	1/4
03	3/8

One-touch fitting (Metric size)

Symbol	Port size
C8	One-touch fitting for ø8
C10	One-touch fitting for ø10
C12	One-touch fitting for ø12
M	Mixed

One-touch fitting (Inch size)

Symbol	Port size
N9	One-touch fitting for ø5/16"
N11	One-touch fitting for ø3/8"
M	Mixed

∗ In the case of mixed specifications (M), indicate separately on the manifold specification sheet.

How to Order Valve Manifold Assembly (Example)

Example

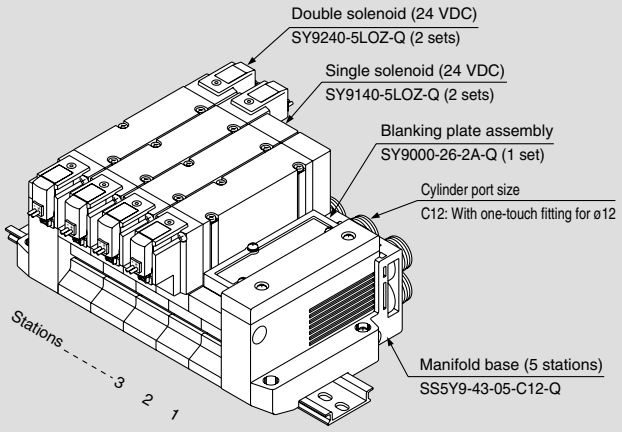

SS5Y9-43-05B-C12-Q 1 set (Type 43, 5 station manifold base part no.)
∗ SY9000-26-2A-Q 1 set (Blanking plate assembly part no.)
∗ SY9140-5LOZ-Q 2 sets (Single solenoid part no.)
∗ SY9220-5LOZ-Q 2 sets (Double solenoid part no.)

The asterisk denotes the symbol for assembly.
Prefix it to the part nos. of the solenoid valve, etc.

Add the valve and option part number under the manifold base part number. In the case of complex arrangement, specify them on the manifold specification sheet.

How to Order Valve

SY 9 2 40 [ ][ ]–5 L [ ][ ]-Q

Series

9	SY9000

Type of actuation

1	2 position single
2	2 position double
3	3 position closed center
4	3 position exhaust center
5	3 position pressure center

Pilot type

Nil	Internal pilot
R	External pilot

Coil specifications

Nil	Standard
T	With power saving circuit (24, 12 VDC only)

∗ Power saving circuit is not available in the case of D, DO or W□ type.

Rated voltage

For DC

5	24 VDC
6	12 VDC
V	6 VDC
S	5 VDC
R	3 VDC

For AC (50/60 Hz)

1	100 VAC
2	200 VAC
3	110 VAC [115 VAC]
4	220 VAC [230 VAC]

∗ DC specifications of Type D and DO is only available with 12 and 24 VDC.
∗ AC specification is only available with D and DO type.

Manual override

-	Non-locking push type
D	Push-turn locking slotted type
E	Push-turn locking lever type

Light/surge voltage suppressor

Electrical entry for G, H, L, M, W

-	Without light/surge voltage suppressor
S	With surge voltage suppressor
Z	With indicator light and surge voltage suppressor
R	With surge voltage suppressor (Non-polar type)
U	With light/surge voltage suppressor (Non-polar type)

∗ Power saving circuit is only available in the "Z" type.

Electrical entry for D

-	Without light/surge voltage suppressor
S	With surge voltage suppressor (Non-polar type)
Z	With light/surge voltage suppressor (Non-polar type)

∗ DOZ is not available.
∗ For AC voltage valves there is no "S" option. It is already built-in to the rectifier circuit.

Electrical entry

24, 12, 6, 5, 3 VDC			24, 12 VDC/ 100, 110, 200, 220 VAC	24, 12, 6, 5, 3 VDC
Grommet	**L plug connector**	**M plug connector**	**DIN terminal**	**M8 connector** ∗
G: Lead wire length 300 mm **H:** Lead wire length 600 mm	**L:** With lead wire (Length 300 mm) **LN:** Without lead wire **LO:** Without connector	**M:** With lead wire (Length 300 mm) **MN:** Without lead wire **MO:** Without connector	**D:** With connector **DO:** Without connector	**WO:** Without connector cable **W□:** With connector cable Note 1)

∗ LN, MN type: with 2 sockets.
∗ DIN terminal type "Y" which conforms to EN-175301-803C (former DIN43650C) is also available. For details, refer to page 210.
∗ For connector cable of M8 connector, refer to back page 12.
∗ Connector M8 type "WA" conforming to IEC 60947-5-2 standard, is also available. For details, see page 211.
Note 1) Enter the cable length symbols in □. Please be sure to fill in the blank referring to back page 13.

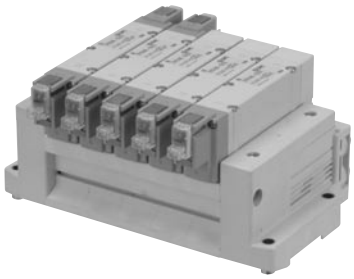

Manifold Specifications

Model			SS5Y9-43
Applicable valve			SY9□40
Manifold type			Stacking type
P(SUP)/R(EXH)			Common SUP, Common EXH
Valve stations			2 to 20 stations (1)
A, B port Porting specifications		Location	Base
		Direction	Side
Port size	P, EA, EB port		C12 (One-touch fitting for ø12)
	A, B port		1/4 3/8 C8 (One-touch fitting for ø8) C10 (One-touch fitting for ø10) C12 (One-touch fitting for ø12)
Manifold base weight W (g), n: Stations			W = 107n + 330

Note 1) For more than 10 stations, supply pressure to P port on both sides and exhaust from EA/EB port on both sides.
Note 2) Refer to “Manifold Option” on page 109.

Flow Characteristics

Model	Port size		Flow characteristics							
	1, 5, 3 (P, EA, EB)	4, 2 (A, B)	1→4/2 (P→A/B)				4/2→5/3 (A/B→EA/EB)			
			C (dm³/(s·bar))	b	Cv	Q[ℓ/min(ANR)]*	C (dm³/(s·bar))	b	Cv	Q[ℓ/min(ANR)]*
SS5Y9-43	C12	C12	6.4	0.29	1.6	1617	7.3	0.29	1.8	1845

Note) The value is for manifold base with 5 stations and individually operated 2 position type.

* These values have been calculated according to ISO6358 and represent the flow rate measured in standard conditions at an upstream pressure of 0.6 MPa (relative pressure) and a differential pressure of 0.1MPa.

SY9000: SS5Y9-43- Stations D □ - 02, C8, N9 / 03, C12, N11 □ (-D)-Q

Grommet (G)

Stations n	2 stations	3	4	5	6	7	8	9	10 stations
L1	148	173	198	223	248	260.5	285.5	310.5	335.5
L2	137.5	162.5	187.5	212.5	237.5	250	275	300	325
L3	117	141	165	189	213	237	261	285	309
L4	15.5	16	16.5	17	17.5	12	12.5	13	13.5
L5	103	127	151	175	199	223	247	271	295

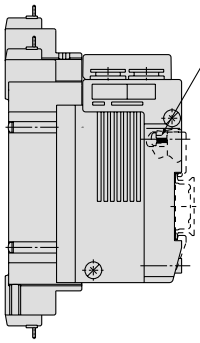

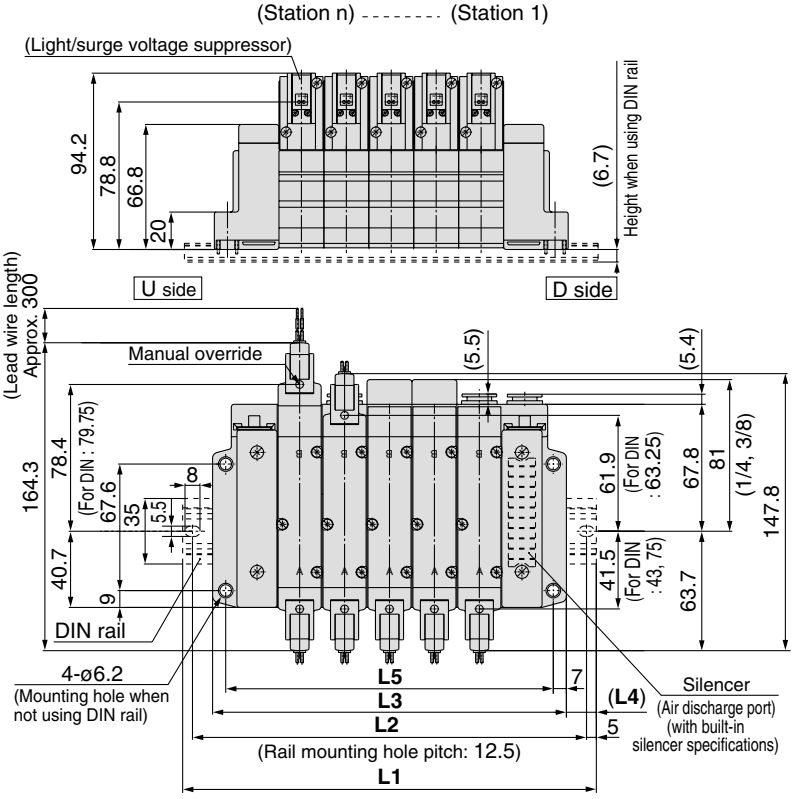

* When P, R port outlets are indicated on the D side, the P, R ports on the opposite side are plugged.

With External Pilot Specifications

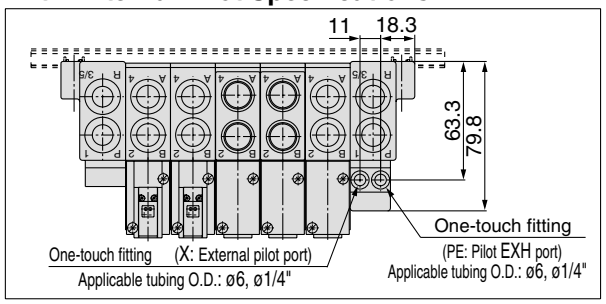

* Air discharge port on the built-in silencer type and the external pilot's extracting position are in the D side.

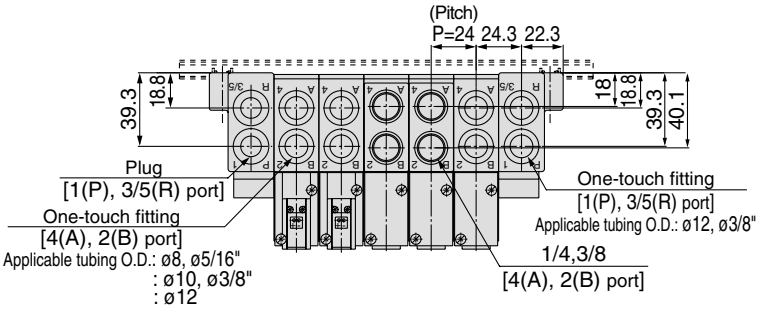

L plug connector (L)

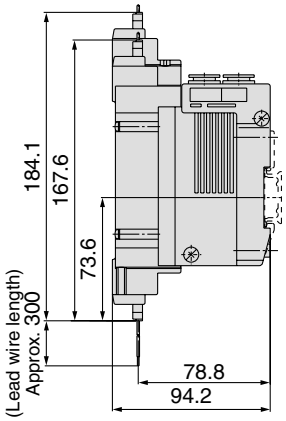

M plug connector (M)

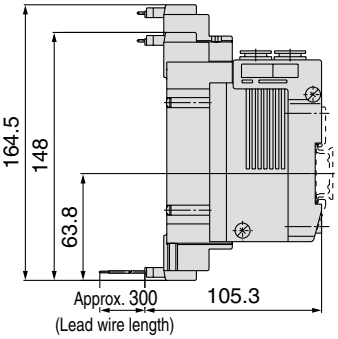

DIN terminal (D)

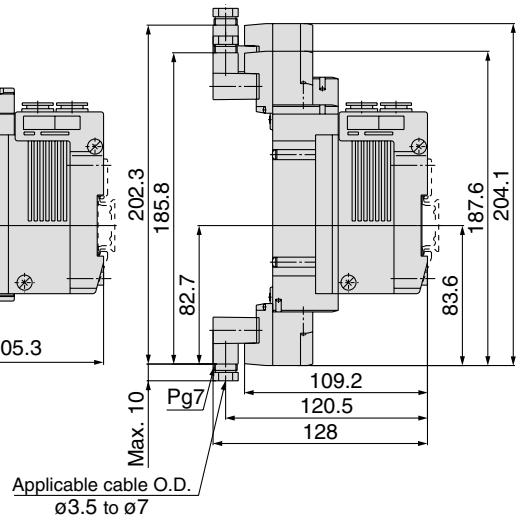

M8 connector (WO)

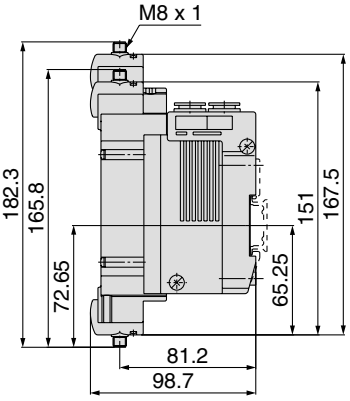

Note) Refer to back page 12 for dimensions of connector types.

SY9000: SS5Y9-43- Stations U □ -02, C9, N9 / 03, C10, N11 / C12 □ (-D)-Q

Grommet (G)

Stations n	2 stations	3	4	5	6	7	8	9	10 stations
L1	148	173	198	223	248	260.5	285.5	310.5	335.5
L2	137.5	162.5	187.5	212.5	237.5	250	275	300	325
L3	117	141	165	189	213	237	261	285	309
L4	15.5	16	16.5	17	17.5	12	12.5	13	13.5
L5	103	127	151	175	199	223	247	271	295

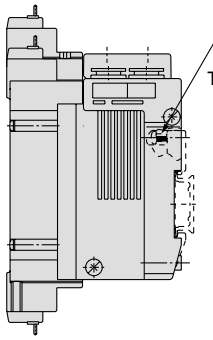

DIN rail holding screw
<When attaching the DIN rail>
Tightening torque: 0.55 to 0.65 N·m

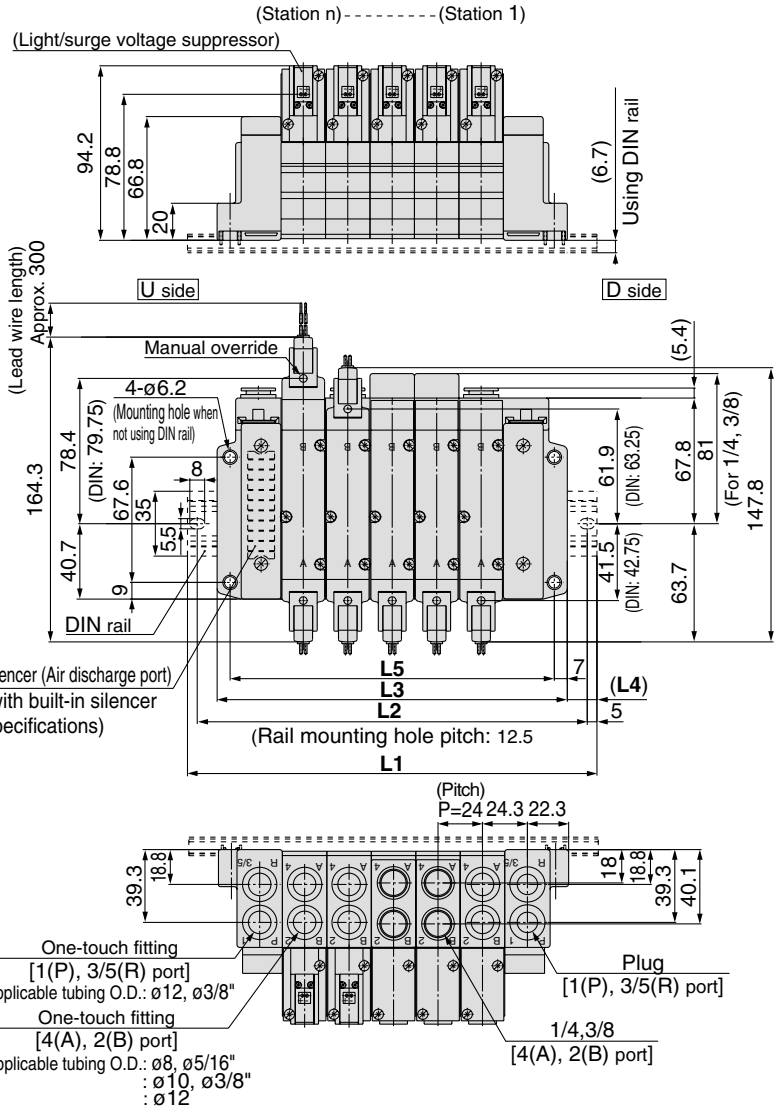

∗ When P, R port outlets are indicated on the U side, the P, R ports on the opposite side are plugged.

With External Pilot Specifications

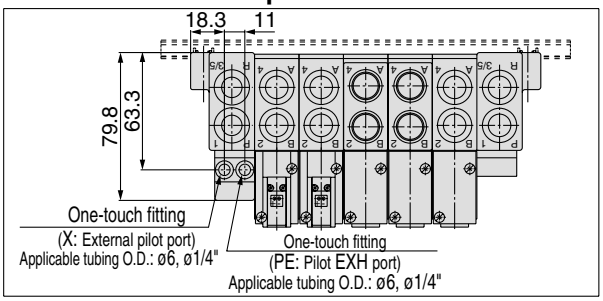

∗ Air discharge port on the built-in silencer type and the external pilot's extracting position are in the D side.

L plug connector (L)

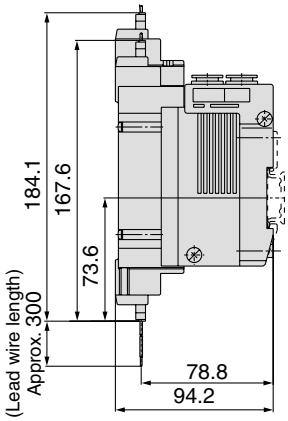

M plug connector (M)

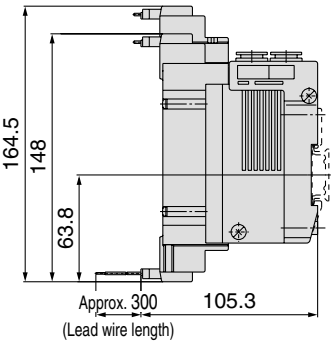

DIN terminal (D)

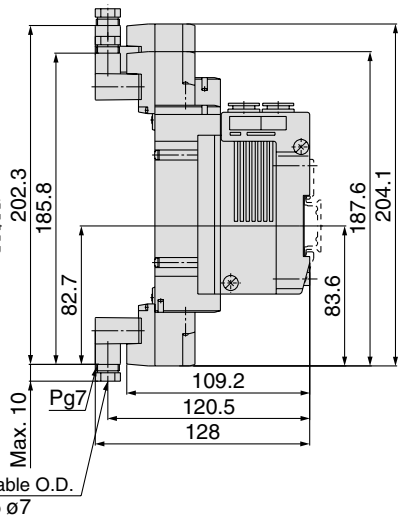

M8 connector (WO)

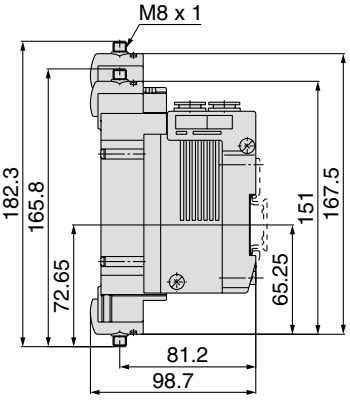

Note) Refer to back page 12 for dimensions of connector types.

SY9000: SS5Y9-43- Stations B □ - 02, C8, N9 / 03, C12, N11 □ (-D)-Q

Grommet (G)

Stations n	2 stations	3	4	5	6	7	8	9	10 stations
L1	148	173	198	223	248	260.5	285.5	310.5	335.5
L2	137.5	162.5	187.5	212.5	237.5	250	275	300	325
L3	117	141	165	189	213	237	261	285	309
L4	15.5	16	16.5	17	17.5	12	12.5	13	13.5
L5	103	127	151	175	199	223	247	271	295

Stations n	11 stations	12	13	14	15	16	17	18	19	20 stations
L1	360.5	385.5	410.5	435.5	460.5	485.5	510.5	535.5	560.5	573
L2	350	375	400	425	450	475	500	525	550	562.5
L3	333	357	381	405	429	453	477	501	525	549
L4	14	14.5	15	15.5	16	16.5	17	17.5	18	12
L5	319	343	367	391	415	439	463	487	511	535

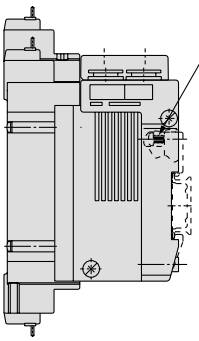

∗ When P, R port outlets are indicated on the B side, the P, R ports on the both sides are in the open state.

With External Pilot Specifications

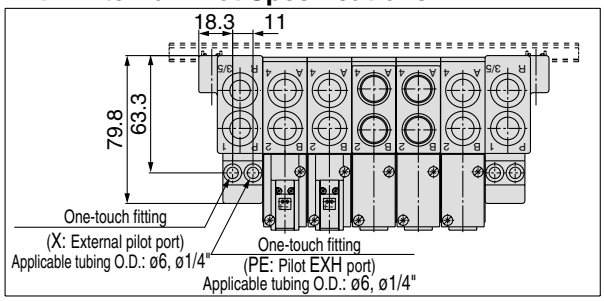

∗ Air discharge port on the built-in silencer type and the external pilot's extracting position are in the B side (both sides).

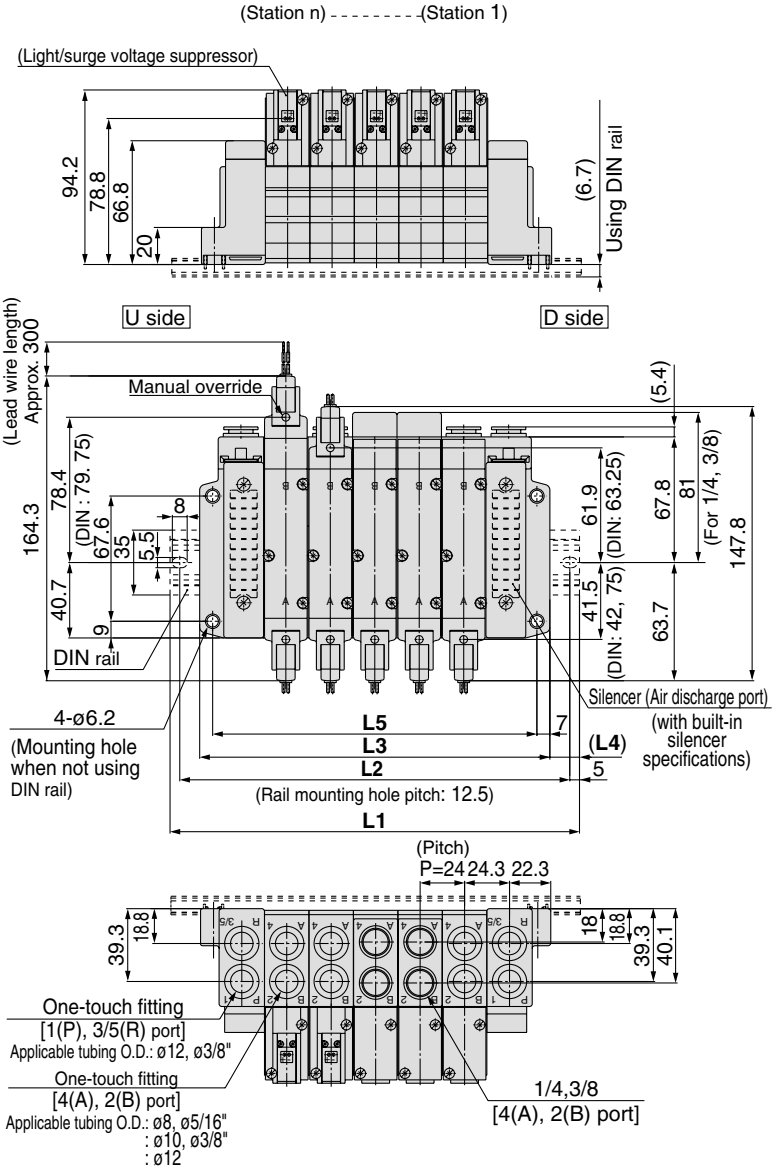

L plug connector (L)

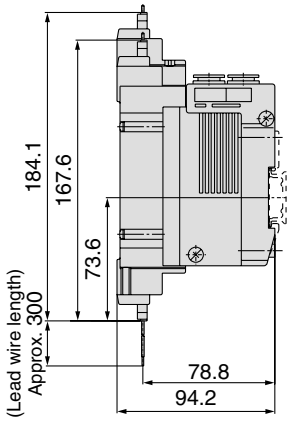

M plug connector (M)

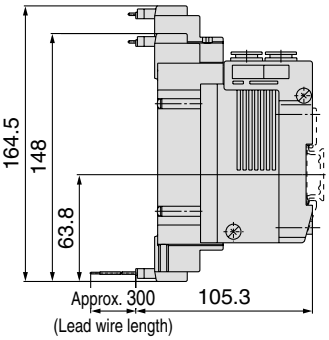

DIN terminal (D)

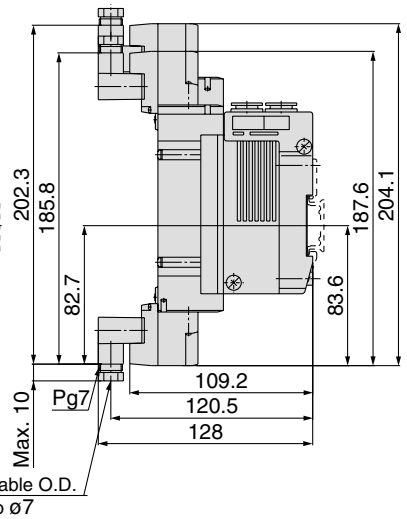

M8 connector (WO)

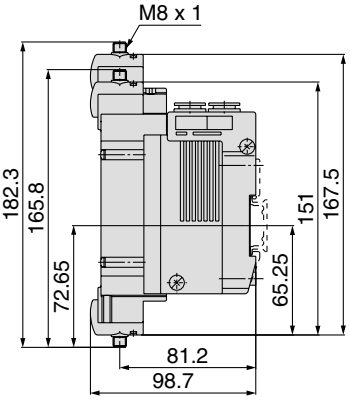

Note) Refer to back page 12 for dimensions of connector types.

Type 41P
Type 42P

5 Port Solenoid Valve
Series SY3000/5000/7000
Base Mounted
Bar Stock Type/Flat Ribbon Cable

How to Order Manifold

Type 41P/Compact style

SS5Y 5 — 41P — 05 — C8 ☐ -Q

Manifold series

3	SY3000
5	SY5000

Stations

03	3 stations
⋮	⋮
12	12 stations

∗ SS5Y3 has 4 to 12 stations.

Thread type

-	Rc
F	G
N	NPT
T	NPTF

∗ Except for M5

A, B port size

Thread piping

Symbol	Port size	Applicable series
M5	M5	SY3000
01	1/8	SY5000

One-touch fitting (Metric size)

Symbol	Port size	Applicable series
C4	One-touch fitting for ø4	SY3000
C6	One-touch fitting for ø6	
C6	One-touch fitting for ø6	SY5000
C8	One-touch fitting for ø8	

One-touch fitting (Inch size)

Symbol	Port size	Applicable series
N3	One-touch fitting for ø5/32"	SY3000
N7	One-touch fitting for ø1/4"	
N7	One-touch fitting for ø1/4"	SY5000
N9	One-touch fitting for ø5/16"	

Type 42P/Common external pilot

SS5Y 5 — 42P — 05 — C8 ☐ -Q

Manifold series

3	SY3000
5	SY5000
7	SY7000

Stations

03	3 stations
⋮	⋮
12	12 stations

∗ SS5Y3 has 4 to 12 stations.

Thread type

-	Rc
F	G
N	NPT
T	NPTF

A, B port size

Thread piping

Symbol	Port size	Applicable series
01	1/8	SY3000
02	1/4	SY5000
02	1/4	SY7000

One-touch fitting (Metric size)

Symbol	Port size	Applicable series
C4	One-touch fitting for ø4	SY3000
C6	One-touch fitting for ø6	
C6	One-touch fitting for ø6	SY5000
C8	One-touch fitting for ø8	
C10	One-touch fitting for ø10	SY7000

One-touch fitting (Inch size)

Symbol	Port size	Applicable series
N3	One-touch fitting for ø5/32"	SY3000
N7	One-touch fitting for ø1/4"	
N7	One-touch fitting for ø1/4"	SY5000
N9	One-touch fitting for ø5/16"	
N9	One-touch fitting for ø5/16"	SY7000

How to Order Valve Manifold Assembly (Example)

Example

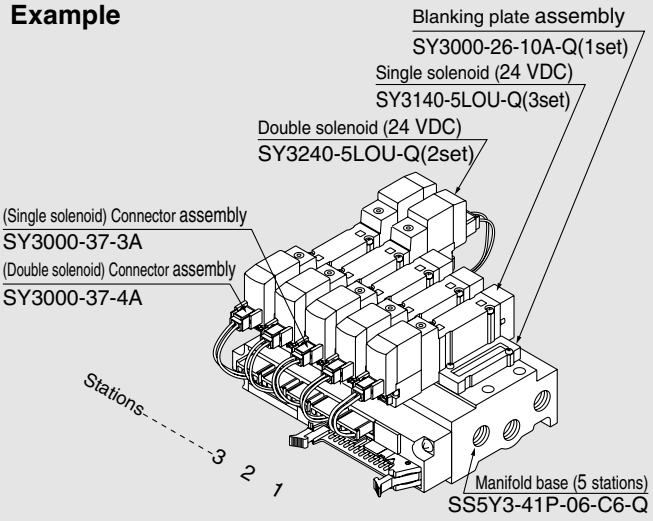

SS5Y3-41P-06-C6-Q **1 set (Type 41, 6 stations manifold base part no.)**
∗ **SX3000-26-10A-Q** **1 set (Blanking plate assembly part no)**
∗ **SY3140-5LOU-Q** **3 sets (Single solenoid part no.)**
∗ **SY3240-5LOU-Q** **2 sets (Double solenoid part no.)**
∗ **SY3000-37-3A** **3 sets (Connector assembly part no.)**
∗ **SY3000-37-4A** **2 sets (Connector assembly part no.)**

→ The asterisk denotes the symbol for assembly.
Prefix it to the part nos. of the solenoid valve, etc.

Add the valve and option part number under the manifold base part number. In the case of complex arrangement, specify them on the manifold specification sheet.

How to Order Valve

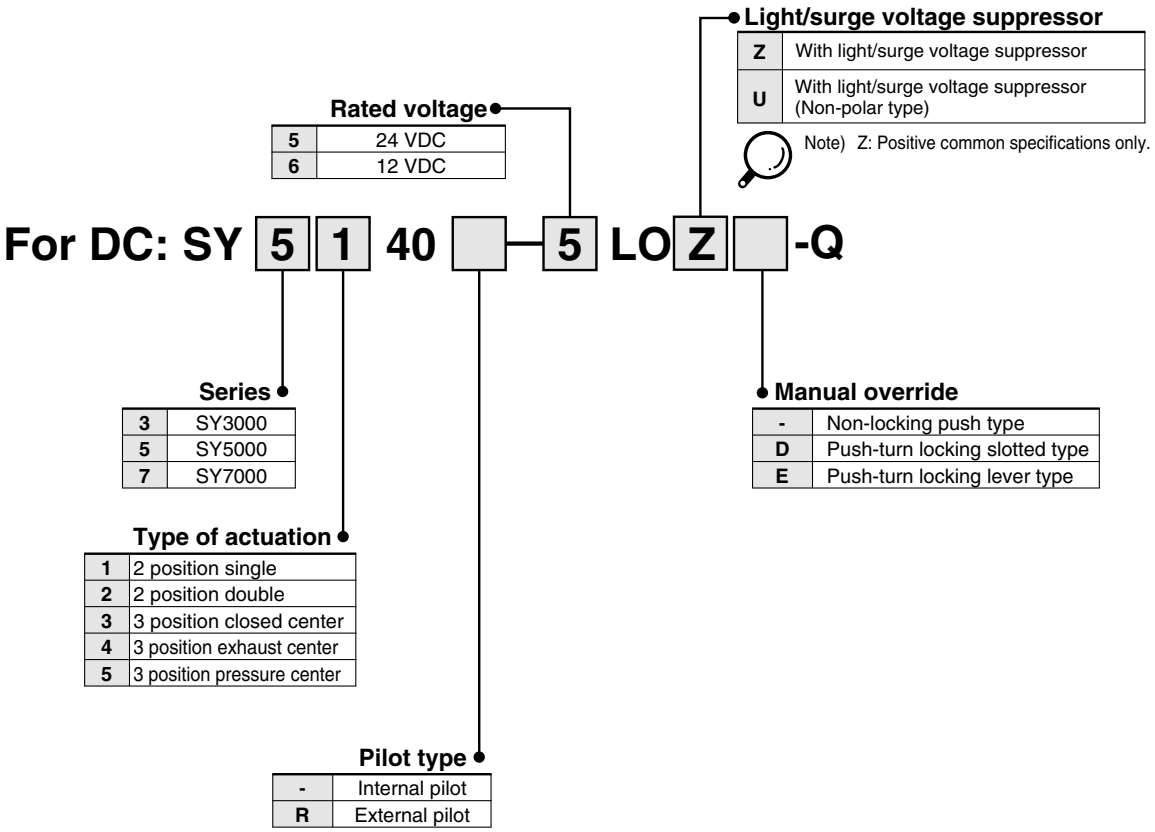

How to Order Connector Assembly

For 12, 24 VDC

For DC	For SY3000	For SY5000/7000
For single solenoid	SY3000-37-3A	SY5000-37-3A
Double solenoid, 3 position type	SY3000-37-4A	SY5000-37-4A
Single with spacer assembly	SY5000-37-3A	SY5000-37-5A
Double, 3 position with spacer assembly	SY3000-37-6A	SY5000-37-6A

Flat Ribbon Cable Manifold Specifications

- **Multiple valve wiring is simplified through the use of the flat cable connector.**
- **Clean appearance**

In the case of a flat ribbon cable type, each valve is wired on the print board of manifold base to allow the external wiring to be piped all together with 26 pins MIL connector.

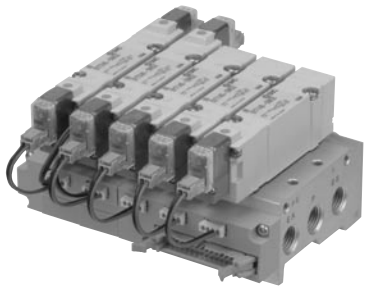

Model		SS5Y3-41P	SS5Y3-42P	SS5Y5-41P	SS5Y5-42P	SS5Y7-42P
Applicable valve		SY3□40		SY5□40		SY7□40
Manifold type		Single base/B mount				
P(SUP)/R(EXH)		Common SUP, Common EXH				
Valve stations		4 to 12 stations (1)		3 to 12 stations Note 1)		
A, B port Porting specifications	Location	Base				
	Direction	Side				
Port size	P, EA, EB port	1/8		1/4		1/4
	A, B port	M5 C4 (One-touch fitting for ø4) C6 (One-touch fitting for ø6)	1/8 C4 (One-touch fitting for ø4) C6 (One-touch fitting for ø6)	1/8 C6 (One-touch fitting for ø6) C8 (One-touch fitting for ø8)	1/4 C6 (One-touch fitting for ø6) C8 (One-touch fitting for ø8)	1/4 C10 (One-touch fitting for ø10)
Manifold base weight W (g), n: Stations		W = 39n + 83	W = 48n + 99	W = 67n + 118	W = 88n + 151	W = 109n + 174
Applicable flat ribbon cable connector		Flat ribbon cable connector, Socket: 26 pins MIL type with strain relief, Conforming to MIL-C-83503				
Internal wiring		In common between +COM and –COM (Z type: +COM only).				
Rated voltage		12, 24 VDC				

Note 1) For more than 10 stations (more than 5 stations in case of SS5Y7), supply pressure to P port on both sides and exhaust from EA/EB port on both sides.
Note 2) The withstand voltage specification for the wiring unit section is JIS C 0704, Grade 1 or its equivalent.
Note 3) Refer to "Manifold Option" on page 109.

Flow Characteristics

Model	Port size		Flow characteristics							
	1, 5, 3 (P, EA, EB)	4, 2 (A, B)	1 → 4/2 (P → A/B)				4/2 → 5/3 (A/B → EA/EB)			
			C (dm³/(s·bar))	b	Cv	Q[ℓ/min(ANR)]*	C (dm³/(s·bar))	b	Cv	Q[ℓ/min(ANR)]*
SS5Y3-41P	1/8	C6	0.75	0.19	0.18	179	0.81	0.23	0.20	197
SS5Y3-42P	1/8	C6	0.75	0.20	0.18	180	0.82	0.20	0.20	196
SS5Y5-41P	1/4	C8	1.8	0.23	0.44	439	1.9	0.16	0.45	445
SS5Y5-42P	1/4	C8	1.9	0.20	0.46	455	1.9	0.12	0.43	436
SS5Y7-42P	1/4	C10	3.0	0.25	0.75	740	3.0	0.12	0.66	688

Note) The value is for manifold base with 5 stations and individually operated 2 position type.
* These values have been calculated according to ISO6358 and represent the flow rate measured in standard conditions at an upstream pressure of 0.6 MPa (relative pressure) and a differential pressure of 0.1MPa.

Internal Wiring of Manifold (Non-polar type)

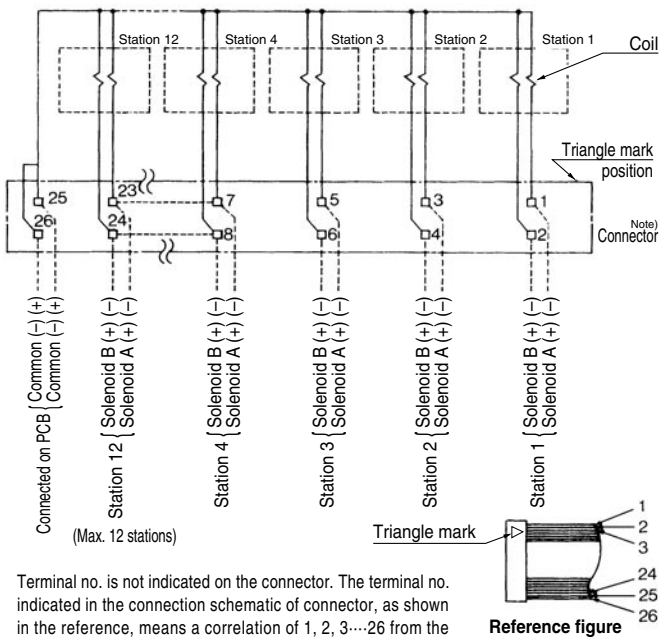

Terminal no. is not indicated on the connector. The terminal no. indicated in the connection schematic of connector, as shown in the reference, means a correlation of 1, 2, 3····26 from the triangle mark side on the flat ribbon cable of connector.

- For more than 10 stations, both poles of the common should be wired.
- For single solenoid, connect to the solenoid A side.
- The maximum number of stations that can be accommodated is 12. For more stations, please contact SMC.

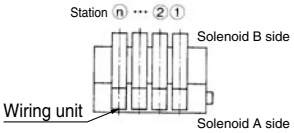

⚠Caution

- For non-polar (U) valves, the electrical DC connections can be used with either positive and negative COM. For type (Z), only use with positive COM as the valve does not operate correctly when used with negative COM.

SY3000: SS5Y3-41P-[Stations]-M5, C4, N3 / C6, N7 [ ]-Q

With interface regulator (with gauge)

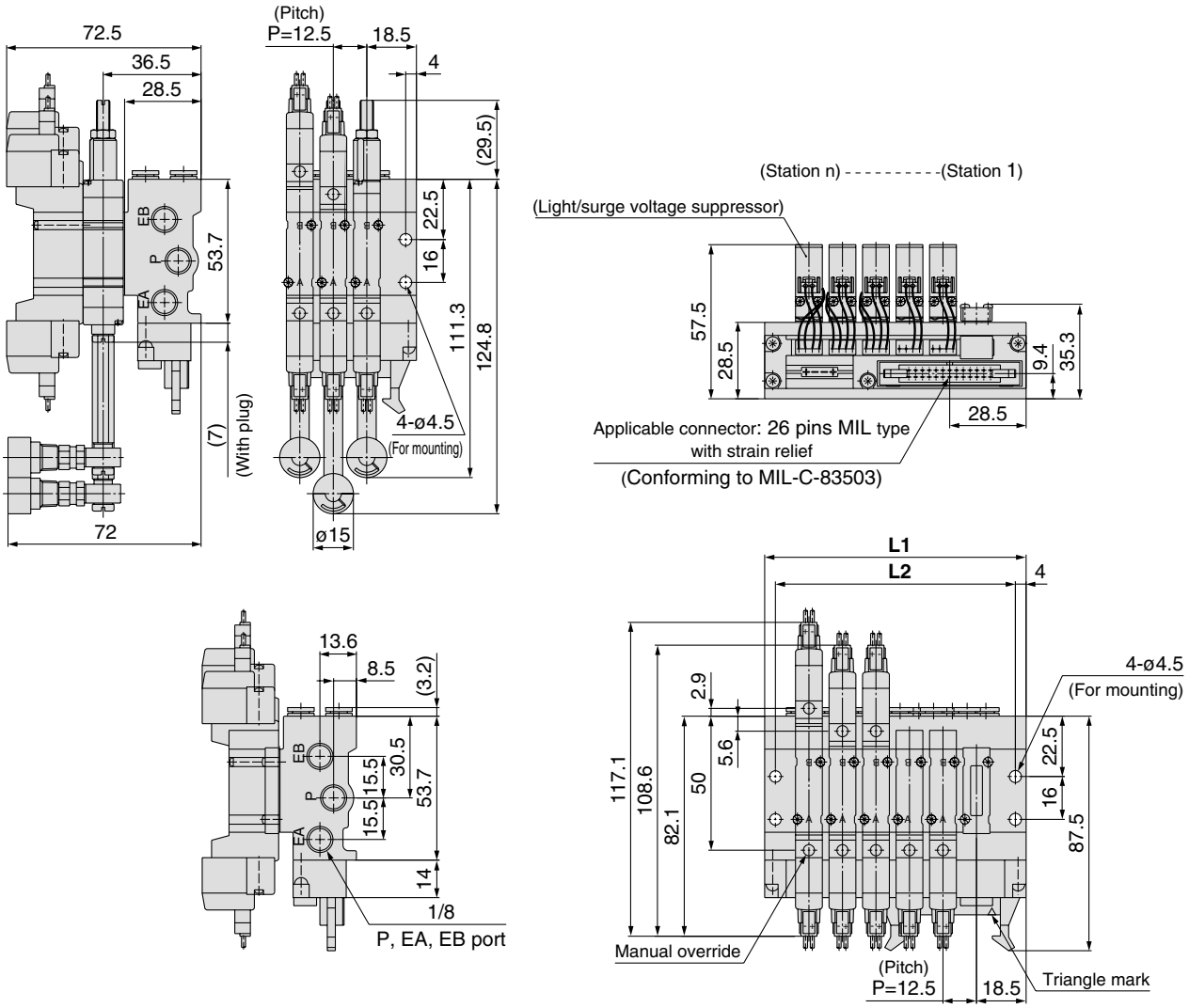

For M5

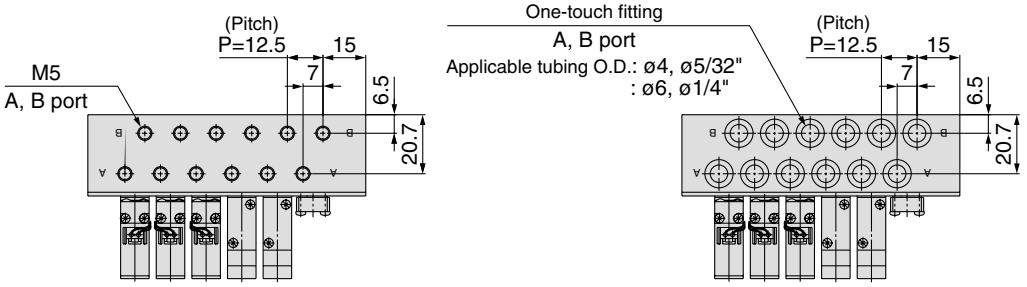

Stations n	4	5	6	7	8	9	10	11	12
L1	72.5	85	97.5	110	122.5	135	147.5	160	172.5
L2	64.5	77	89.5	102	114.5	127	139.5	152	164.5

SY5000: SS5Y5-41P-Stations-01, C6,N7 C8,N9 -Q

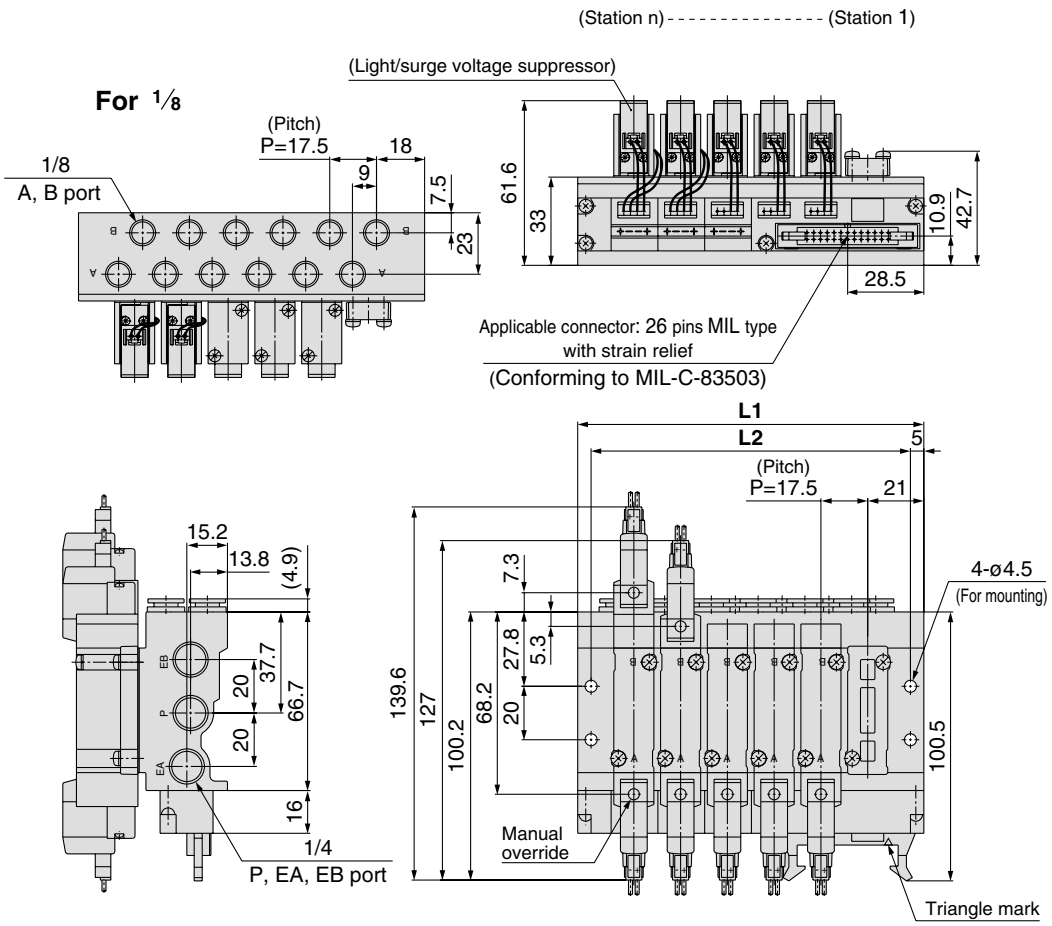

With interface regulator (with gauge)

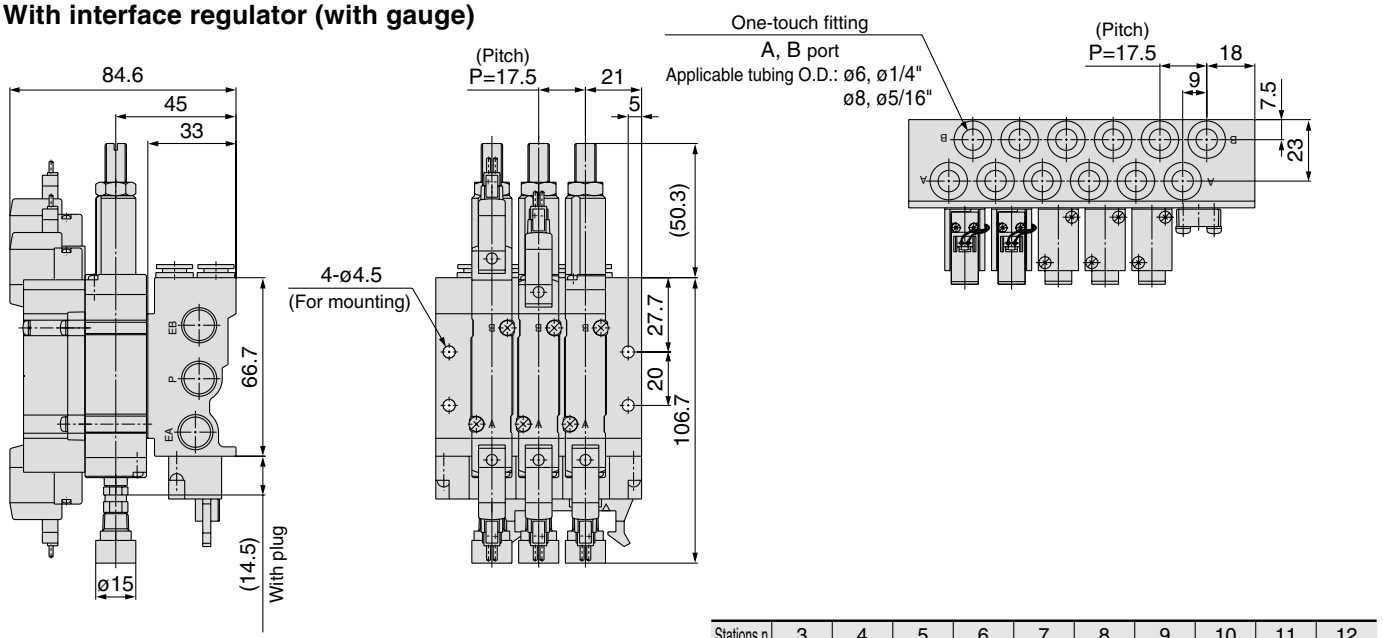

Stations n	3	4	5	6	7	8	9	10	11	12
L1	77	94.5	112	129.5	147	164.5	182	199.5	217	234.5
L2	67	84.5	102	119.5	137	154.5	172	189.5	207	224.5

SY3000: SS5Y3-42P-Stations-01, C4, N3 C6, N7 □-Q

With interface regulator (with gauge)

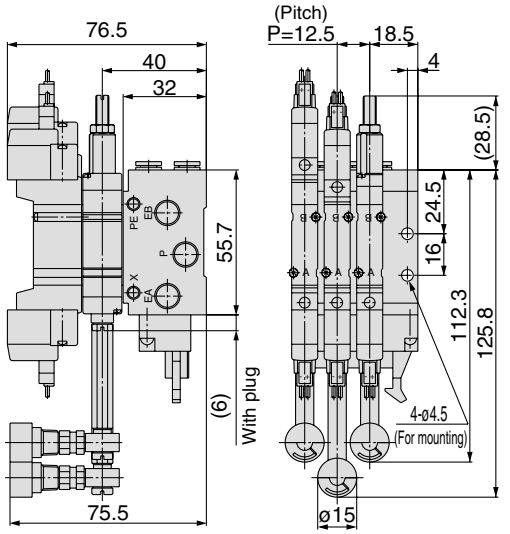

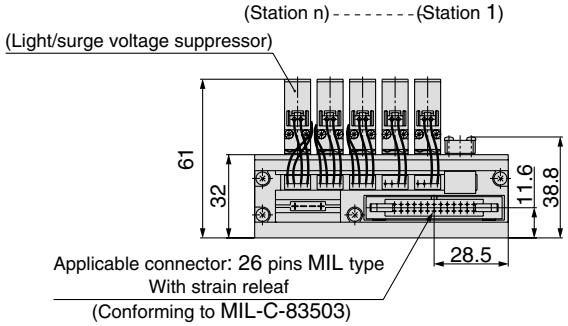

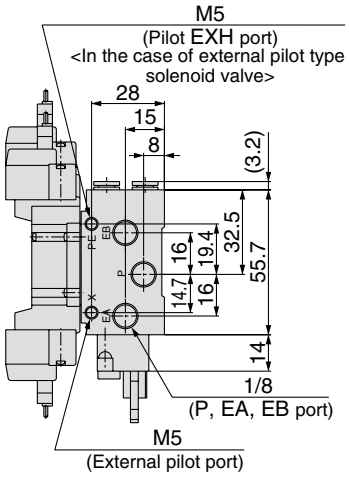

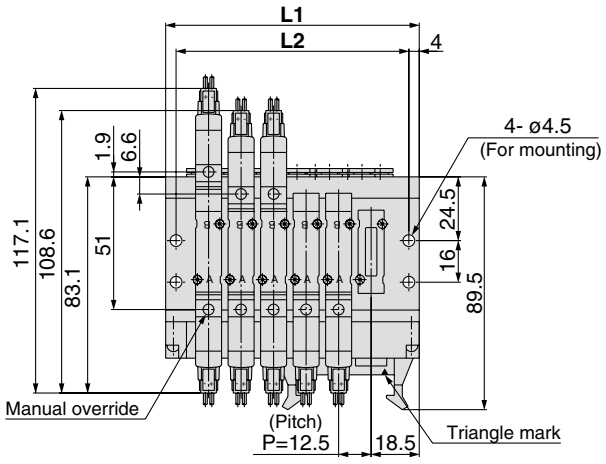

For 1/8

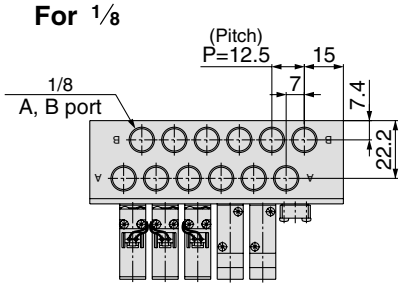

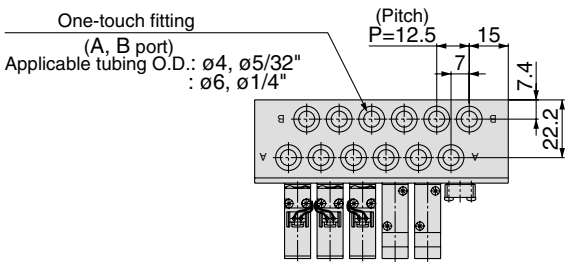

Stations n	4	5	6	7	8	9	10	11	12
L1	72.5	85	97.5	110	122.5	135	147.5	160	172.5
L2	64.5	77	89.5	102	114.5	127	139.5	152	164.5

SY5000: SS5Y5-42P- Stations -02, C6, N7 C8, N9 -Q

Grommet (G)

With interface regulator (with gauge)

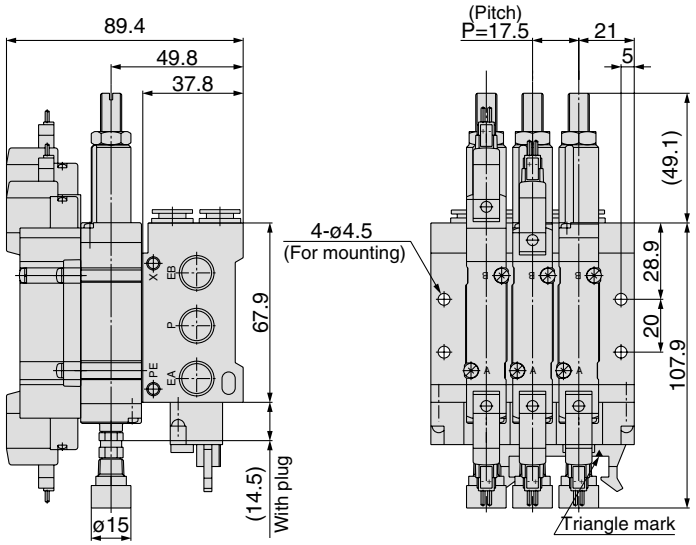

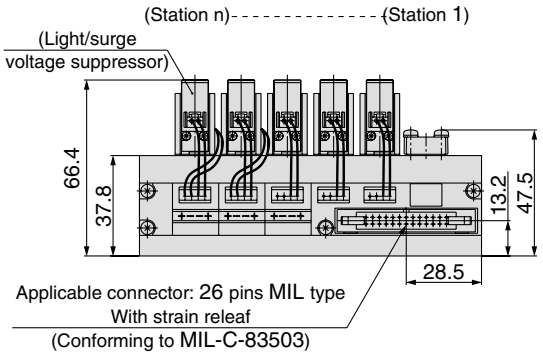

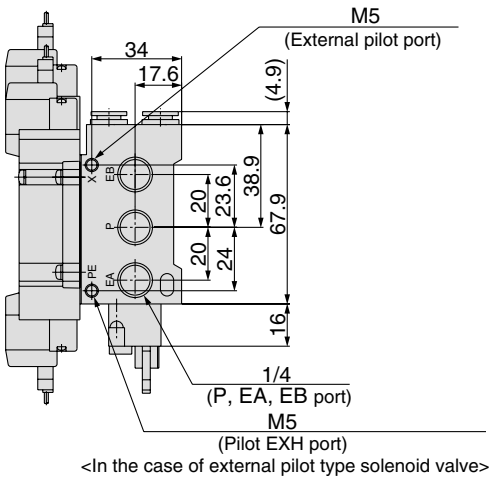

<In the case of external pilot type solenoid valve>

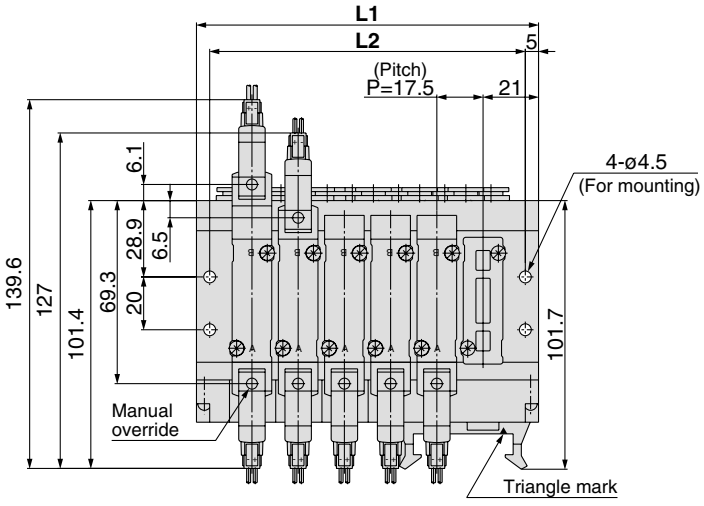

For 1/4

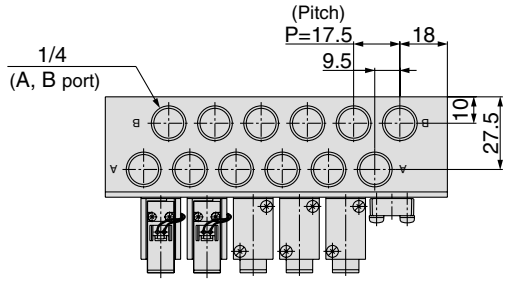

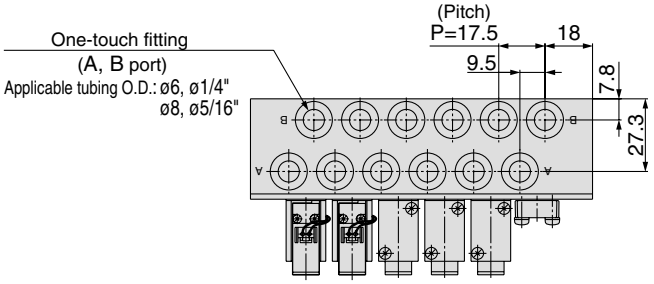

Stations n	3	4	5	6	7	8	9	10	11	12
L1	77	94.5	112	129.5	147	164.5	182	199.5	217	234.5
L2	67	84.5	102	119.5	137	154.5	172	189.5	207	224.5

SY7000: SS5Y7-42P-[Stations]-02, C10, N11[ ]-Q

Grommet (G)

With interface regulator (with gauge)

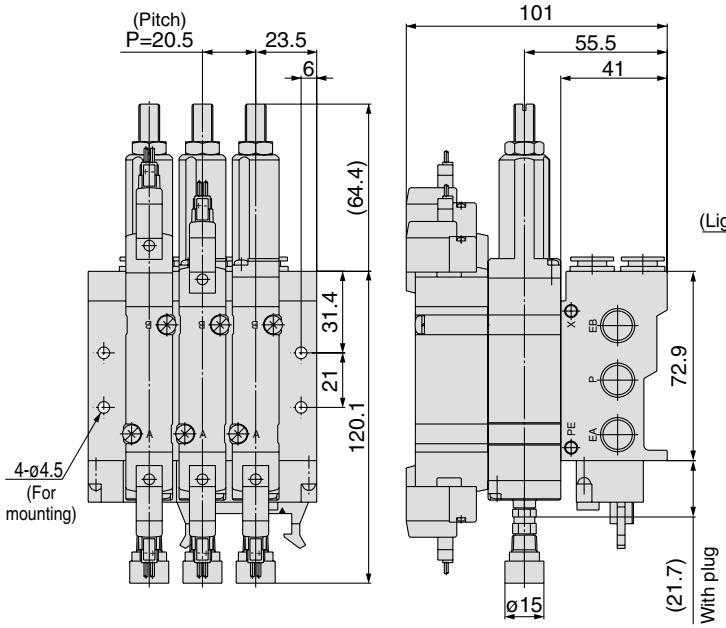

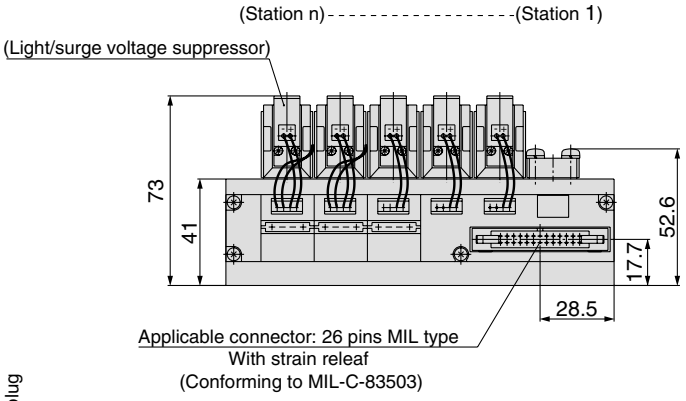

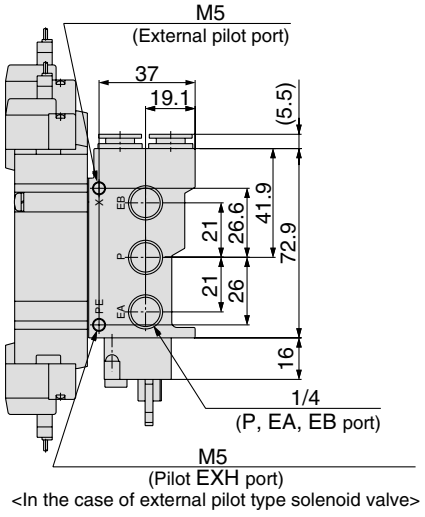

<In the case of external pilot type solenoid valve>

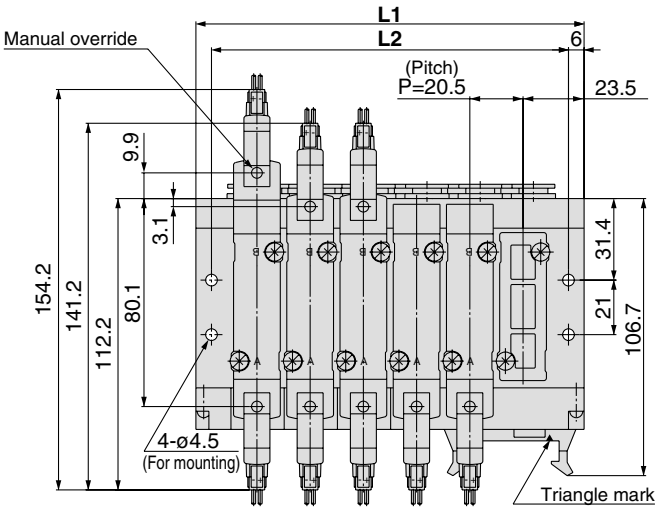

For 1/4

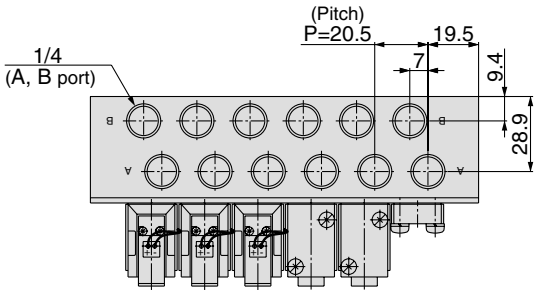

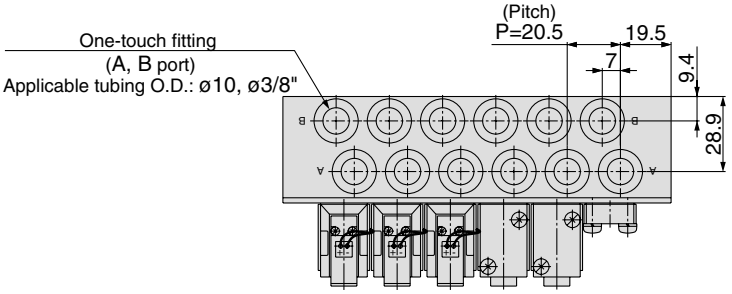

Stations n	3	4	5	6	7	8	9	10	11	12
L1	88	108.5	129	149.5	170	190.5	211	231.5	252	272.5
L2	76	96.5	117	137.5	158	178.5	199	219.5	240	260.5

5 Port Solenoid Valve
Series SY9000
Base Mounted
Type 43P Stacking Type/Flat Ribbon Cable

How to Order Manifold

SS5Y9 – 43P – 05 U [ ] – C8 [ ] – [ ] -Q

Manifold series

9	SY9000

Valve stations

Symbol	Stations
04	4 stations
⋮	⋮
12	12 stations

∗ This also includes the number of blanking plate assemblies.

P, R port outlets

Symbol	Port outlet	Applicable stations
U	U side	4 to 10 stations
D	D side	
B	Both sides	4 to 12 stations

SUP/EXH block assembly specifications

Symbol	Specifications
-	Standard/Internal pilot specification
R	External pilot specification
S	Internal pilot/Built-in silencer
RS	External pilot/Built-in silencer

Thread type

-	Rc
F	G
N	NPT
T	NPTF

Option

Symbol	Mounting
-	Direct mounting
D	DIN rail mounting (with DIN rail)
D0	DIN rail mounting (without DIN rail)
D∗	When a longer DIN rail is desired than the specified stations, specify the station number to be required into ∗ mark.

A, B port size

Thread piping

Symbol	Port size
02	1/4
03	3/8

One-touch fitting (Metric size)

Symbol	Port size
C8	One-touch fitting for ø8
C10	One-touch fitting for ø10
C12	One-touch fitting for ø12
M	Mixed

One-touch fitting (Inch size)

Symbol	Port size
N9	One-touch fitting for ø5/16"
N11	One-touch fitting for ø3/8"
M	Mixed

∗ In the case of mixed specifications (M), indicate separately on the manifold specification sheet.

How to Order Valve Manifold Assembly (Example)

Example

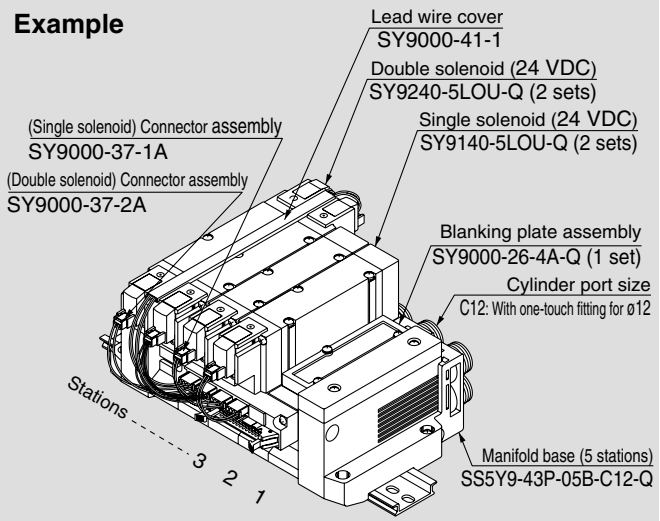

SS5Y9-43P-05B-C12-Q	**1 set (Type 43, 5 station manifold base part no.)**
∗ **SY9000-26-4A-Q**	**1 set (Blanking plate assembly part no.)**
∗ **SY9140-5LOU-Q**	**2 sets (Single solenoid part no.)**
∗ **SY9240-5LOU-Q**	**2 sets (Double solenoid part no.)**
∗ **SY9000-37-1A**	**2 sets (Connector assembly part no.)**
∗ **SY9000-37-2A**	**2 sets (Connector assembly part no.)**
∗ **SY9000-41-1**	**1 set (Lead wire cover)**

The asterisk denotes the symbol for assembly.
Prefix it to the part nos. of the solenoid valve, etc.

Add the valve and option part number under the manifold base part number. In the case of complex arrangement, specify them on the manifold specification sheet.

How to Order Valve

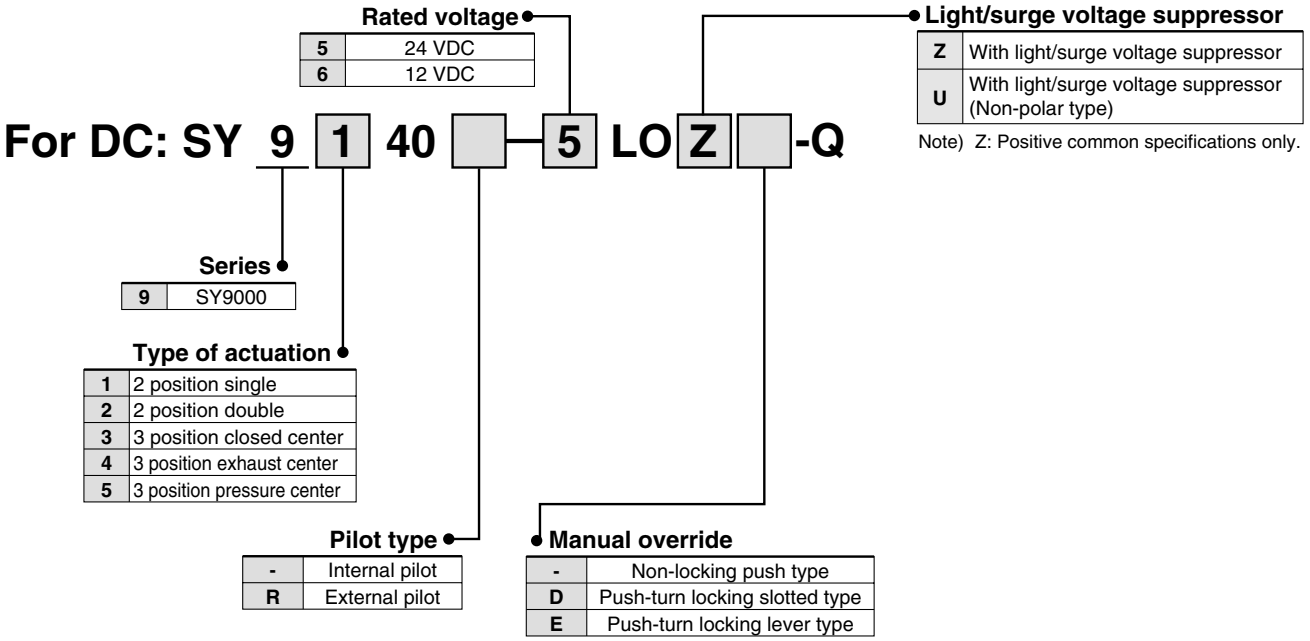

How to Order Connector Assembly

For 12, 24 VDC

For DC	For SY9000
For single solenoid	SY9000-37-1A
Double solenoid, 3 position type	SY9000-37-2A
Single with spacer assembly	SY9000-37-3A
Double, 3 position with spacer assembly	SY9000-37-4A

- **Multiple valve wiring is simplified through the use of the flat cable connector.**
- **Clean appearance**

In the case of a flat ribbon cable type, each valve is wired on the print board of manifold base to allow the external wiring to be piped all together with 26 pins MIL connector.

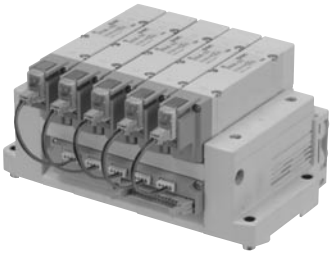

Flat Ribbon Cable Manifold Specifications

Model		SS5Y9-43P
Applicable valve		SY9□40
Manifold type		Stacking type
P (SUP)/R (EXH)		Common SUP, Common EXH
Valve stations		4 to 12 stations Note 1)
A, B port Porting specifications	Location	Base
	Direction	Side
Port size	P, EA, EB port	C12 (One-touch fitting for ø12)
	A, B port	1/4 3/8 C8 (One-touch fitting for ø8) C10 (One-touch fitting for ø10) C12 (One-touch fitting for ø12)
Manifold base weight W (g) n: Stations		W = 114n + 343
Applicable flat ribbon cable connector		Flat ribbon cable connection, Socket: 26 pins MIL with strain relief, Conforming to MIL-C-83503
Internal wiring		In common between +COM and –COM (Z type: +COM only)
Rated voltage		12, 24 VDC

Note 1) For more than 10 stations, supply pressure to P port on both sides and exhaust from EA/EB port on both sides.
Note 2) The withstand voltage specification for the wiring unit section is JIS C 0704, Grade 1 or its equivalent.
Note 3) Refer to "Manifold Option" on page 109.

Flow Characteristics

Model	Port size		Flow characteristics							
	1, 5, 3 (P, EA, EB)	4, 2 (A, B)	1 → 4/2 (P → A/B)				4/2 → 5/3 (A/B → EA/EB)			
			C (dm³/(s·bar))	b	Cv	Q[ℓ/min(ANR)]*	C (dm³/(s·bar))	b	Cv	Q[ℓ/min(ANR)]*
SS5Y9-43P	C12	C12	6.4	0.29	1.6	1617	7.3	0.29	1.8	1845

Note) The value is for manifold base with 5 stations and individually operated 2 position type.
* These values have been calculated according to ISO6358 and represent the flow rate measured in standard conditions at an upstream pressure of 0.6 MPa (relative pressure) and a differential pressure of 0.1MPa.

Internal Wiring of Manifold (Non-polar type)

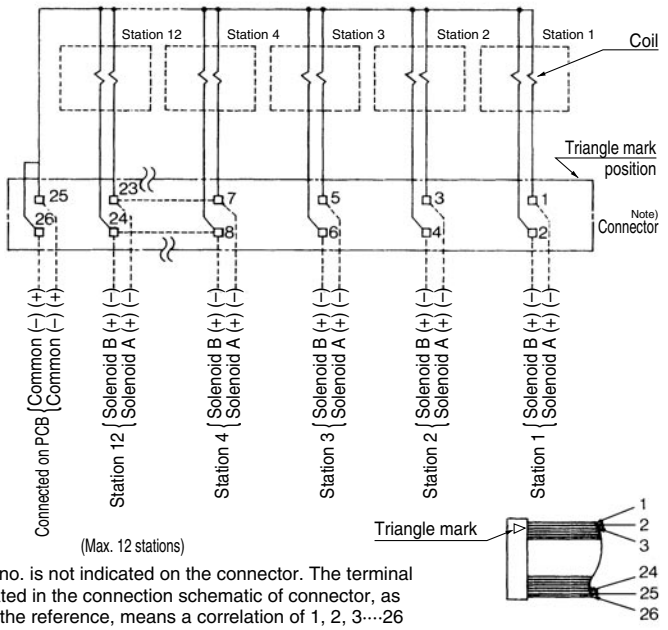

Note)
Terminal no. is not indicated on the connector. The terminal no. indicated in the connection schematic of connector, as shown in the reference, means a correlation of 1, 2, 3····26 from the triangle mark side on the flat ribbon cable of connector.

Reference figure

- For more than 10 stations, both poles of the common should be wired.
- For single solenoid, connect to the solenoid A side.
- The maximum number of stations that can be accommodated is 12. For more stations, please contact SMC.

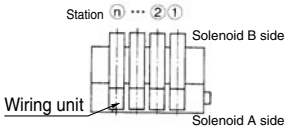

⚠Caution

- For non-polar (U) valves, the electrical DC connections can be used with either positive and negative COM. For type (Z), only use with positive COM as the valve does not operate correctly when used with negative COM.

SY9000: SS5Y9-43P-Stations D□-02/03 C8, N9 C10, N11 C12 □(-D)-Q

∗ When P, R port outlets are indicated on the D side, the P, R ports on the opposite side are plugged.

With External Pilot Specifications

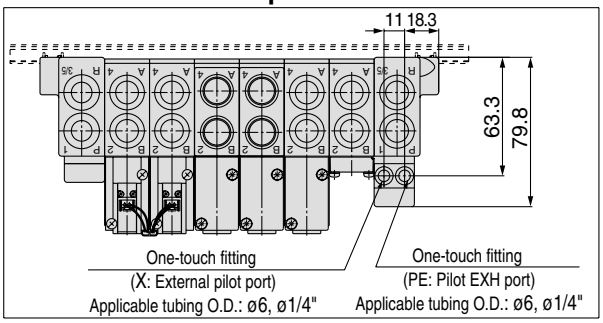

∗ Air discharge port on the built-in silencer type and the external pilot's extracting position are in the D side.

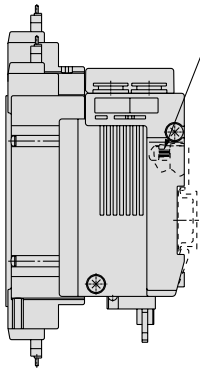

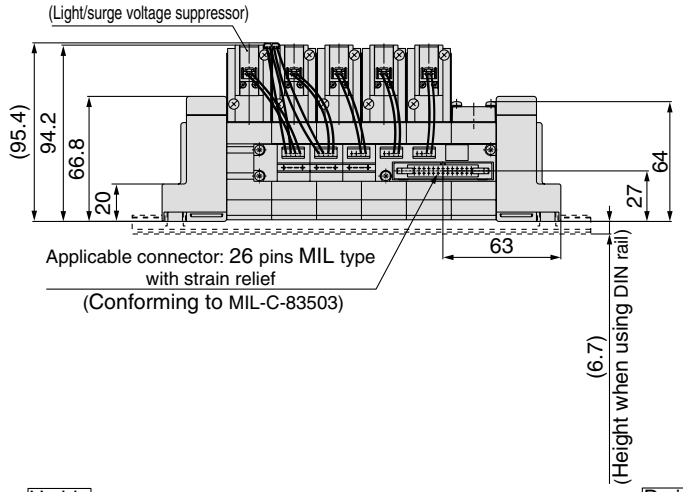

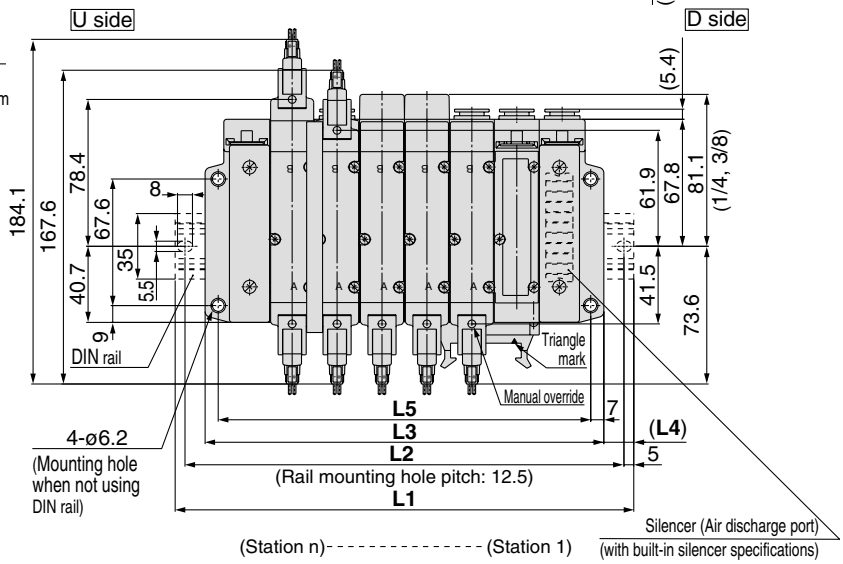

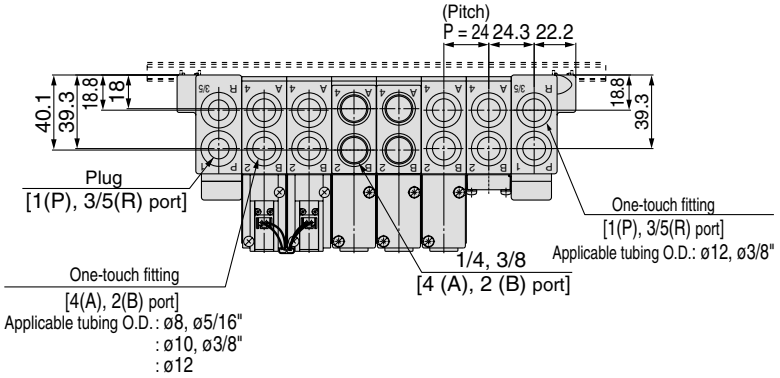

Stations n	4 stations	5	6	7	8	9	10 stations
L1	198	223	248	260.5	285.5	310.5	335.5
L2	187.5	212.5	237.5	250	275	300	325
L3	165	189	213	237	261	285	309
L4	16.5	17	17.5	12	12.5	13	13.5
L5	151	175	199	223	247	271	295

SY9000: SS5Y9-43P- Stations U □ - 02 03 C8, N9 C10, N11 C12 □ (-D)-Q

∗ When P, R port outlets are indicated on the U side, the P, R ports on the opposite side are plugged.

With External Pilot Specifications

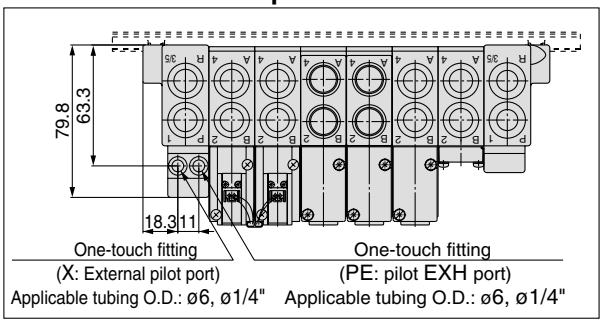

∗ Air discharge port on the built-in silencer type and the external pilot's extracting position are in the U side.

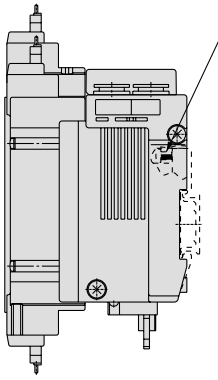

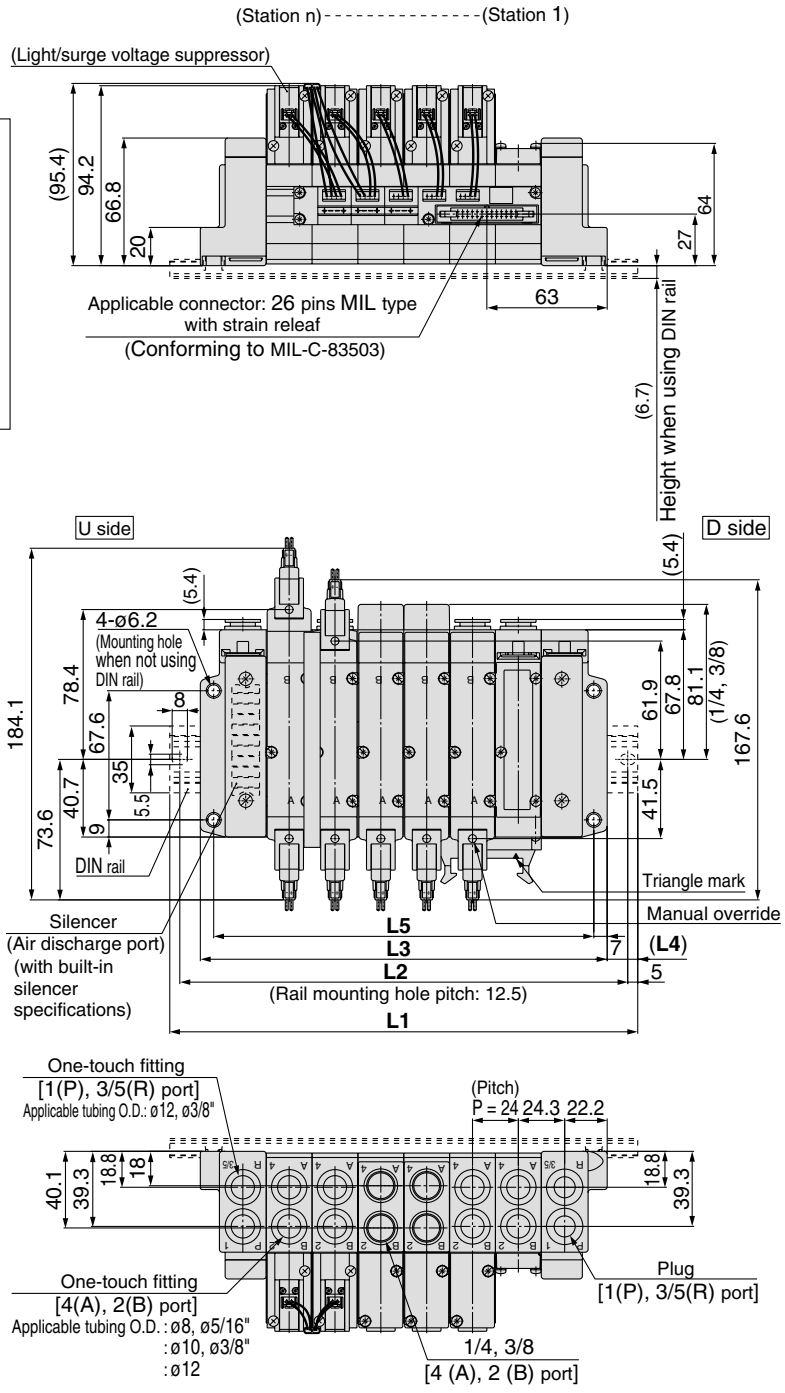

Stations n	4 stations	5	6	7	8	9	10 stations
L1	198	223	248	260.5	285.5	310.5	335.5
L2	187.5	212.5	237.5	250	275	300	325
L3	165	189	213	237	261	285	309
L4	16.5	17	17.5	12	12.5	13	13.5
L5	151	175	199	223	247	271	295

SY9000: SS5Y9-43P- Stations B □ - 02 03 C8, N9 C10, N11 C12 □ (-D)-Q

∗ When P, R port outlets are indicated on the B side, the P, R ports on the both sides are in the open state.

(Station n) - - - - - - - - - - - - - - - (Station 1)

With External Pilot Specifications

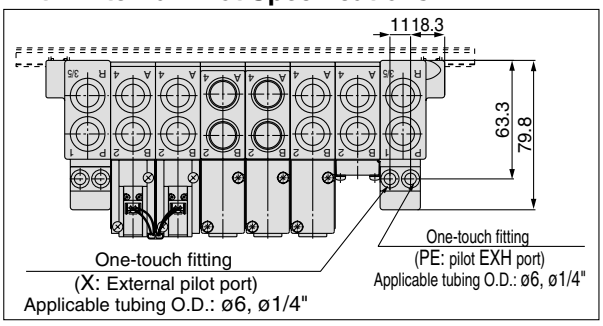

∗ Air discharge port on the built-in silencer type and the external pilot's extracting position are in the B side (both sides).

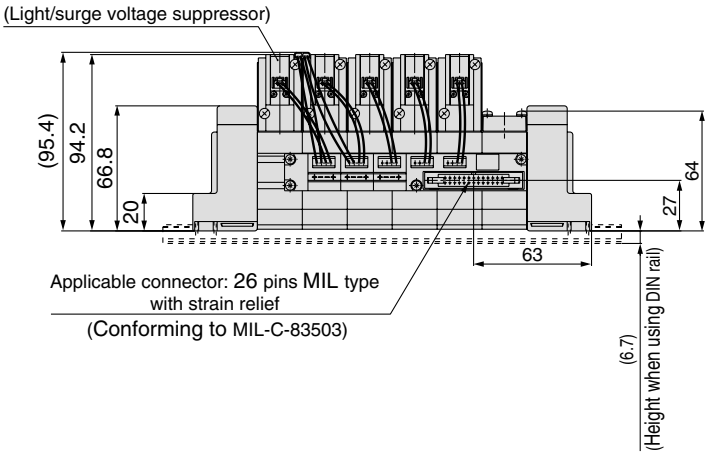

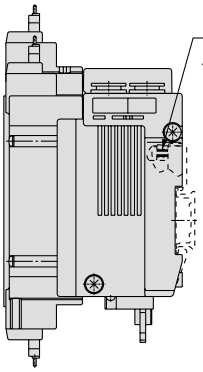

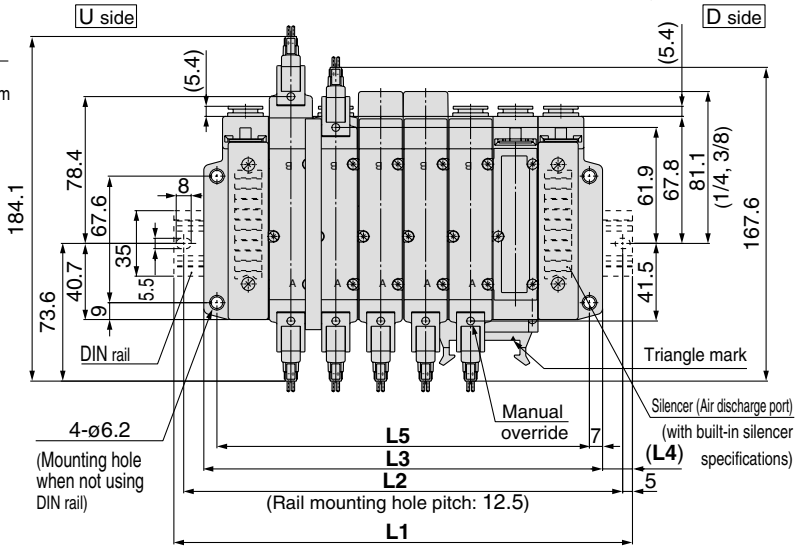

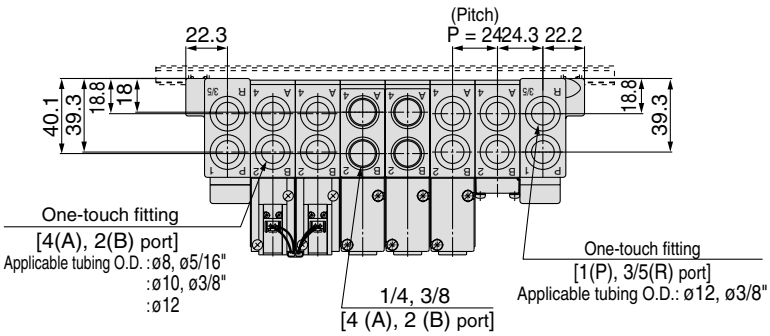

Stations n	4 stations	5	6	7	8	9	10	11	12 stations
L1	198	223	248	260.5	285.5	310.5	335.5	360.5	385.5
L2	187.5	212.5	237.5	250	275	300	325	350	375
L3	165	189	213	237	261	285	309	333	357
L4	16.5	17	17.5	12	12.5	13	13.5	14	14.5
L5	151	175	199	223	247	271	295	319	343

Manifold Option

■ Type 41, 42, 43 Blanking plate assembly

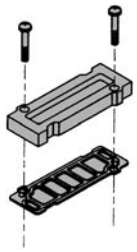

Series	Assembly part no.
SY3000	SY3000-26-9A-Q
SY5000	SY5000-26-20A-Q
SY7000	SY7000-26-22A-Q
SY9000	SY9000-26-2A-Q

■ Type 41P, 42P, 43P Blanking plate assembly

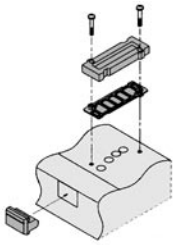

Series	Assembly part no.
SY3000	SY3000-26-10A-Q
SY5000	SY5000-26-21A-Q
SY7000	SY7000-26-23A-Q
SY9000	SY9000-26-4A-Q

■ Gasket assembly part no.

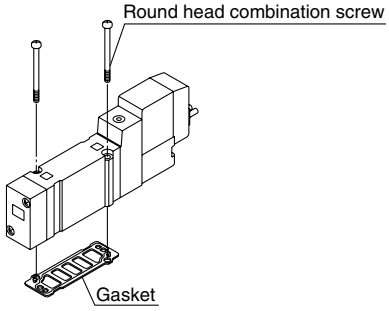

Series	Assembly part no.
SY3000	SY3000-GS-2
SY5000	SY5000-GS-2-Q
SY7000	SY7000-GS-2-Q
SY9000	SY9000-GS-2

Note) Gasket assembly consists of mounting screws and a gasket.

■ Individual SUP spacer assembly

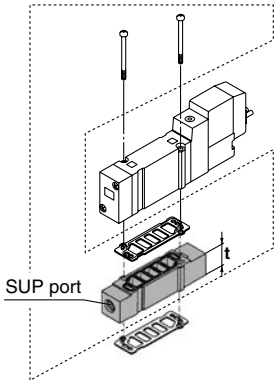

Series	Assembly part no.	Port size	t
SY3000	SY3000-38-2A-Q	M5	11
SY5000	SY5000-38-16∗A-Q	1/8	15
SY7000	SY7000-38-16∗A-Q	1/4	18
SY9000	SY9000-38-2∗A-Q	1/4	20

Note) • The SUP port of SY3000, 5000 and 7000 may be either on the lead wire side or on the end plate side. (An assembly is shipped under the condition shown in the figure.)
• The end plate side is only available to SY9000.

■ Individual EXH spacer assembly

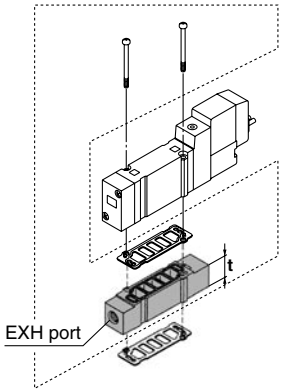

Series	Assembly part no.	Port size	t
SY3000	SY3000-39-2A-Q	M5	11
SY5000	SY5000-39-16∗A-Q	1/8	15
SY7000	SY7000-39-16∗A-Q	1/4	18
SY9000	SY9000-39-2∗A-Q	1/4	20

Note) In case of 41P, 42P and 43P, for protection of the wiring unit section from drainage, piping at the EA port should be arranged so that it will not be directly exposed to exhaust from the valve.

■ Individual SUP spacer assembly + Individual EXH spacer assembly (Double spacer)

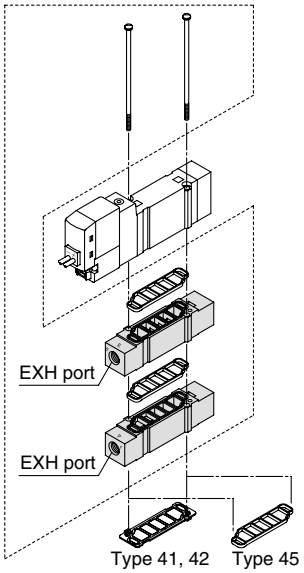

[●: Available ×: Not available —: Nonapplicable manifold]

Series	Individual SUP + Individual EXP Assemble part no.	Port size	Applicable manifold types						
			41	41P	42	42P	45	45-A 45-NA	45□
SY3000	SY3000-120-2A-Q	M5	●	×	●	×	●	×	×
SY5000	SY5000-75-1∗A-Q	1/8	●	×	●	×	●	×	×
SY7000	SY7000-73-1∗A-Q	1/4	●	×	●	×	—	—	—

Note) The port on a spacer can be directed to the pilot valve side or end plate side. For mounting the port to the pilot valve side, please make sure to connect the ports to protect the pilot valve wiring section from drainage.
The individual SUP spacer and EXH spacer can be mounted either on the upper side or lower side. (The above illustration shows the condition when the product is shipped out from a factory already assembled.)

⚠ Caution

Mounting screw tightening torques

M2: 0.16 N·m
M3: 0.8 N·m
M4: 1.4 N·m

∗ Thread type

-	Rc
F	G
N	NPT
T	NPTF

⚠ Warning

When mounting a valve or spacer on the manifold base or sub-plate, etc., those mounting directions are determined. If mounted in the wrong direction, the equipment to be connected may cause malfunction. Refer to external dimensions, and then mount it.

Manifold Option

▪ SUP blocking disk (For SY9000)

By installing a SUP blocking disk in the pressure supply passage of a manifold valve, it is possible to supply two or more different high and low pressures to one manifold.

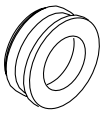

Series	No.
SY9000	SY9000-57-1A

▪ EXH blocking disk (For SY9000)

By installing an EXH blocking disk in the exhaust passage of a manifold valve, it is possible to divide the valve's exhaust so that it does not affect another valve. (Two blocking disks are needed to divide both exhausts.)

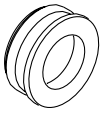

Series	No.
SY9000	SY9000-57-1A

▪ Label for block disk (For SY9000)

The labels shown below are used on manifold stations containing SUP/EXH block disk(s) to show their location. (3 pcs. each)

VZ3000-123-1A

Label for SUP block disk Label for EXH block disk Label for SUP/EXH block disk



Note) When a block disk is concurrently ordered by specifying on the manifold specification sheet, etc., a label will be stuck on the position where block disk is mounted.

▪ Silencer with One-touch fitting (For SY9000)

The silencer plugs directly into the One-touch fittings of the manifold R (exhaust) port.

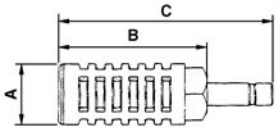

For Series	Model	Effective area	A	B	C
SY9000 (ø12)	AN300-KM12	41 mm²	ø25	70	98

▪ DIN Rail Dimensions/Weight for SY9000

VZ1000 – 11 – 4 – □

● Refer to L dimensions

∗ Fill in □ with an appropriate no. listed on the table of DIN rail dimensions shown below.

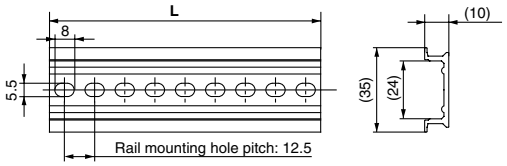

No.	0	1	2	3	4	5	6	7	8	9
L Dimension	98	110.5	123	135.5	148	160.5	173	185.5	198	210.5
Weight (g)	24.8	28	31.1	34.3	37.4	40.6	43.8	46.9	50.1	53.3
No.	10	11	12	13	14	15	16	17	18	19
L Dimension	223	235.5	248	260.5	273	285.5	298	310.5	323	335.5
Weight (g)	56.4	59.6	62.7	65.9	69.1	72.2	75.4	78.6	81.7	84.9
No.	20	21	22	23	24	25	26	27	28	29
L Dimension	348	360.5	373	385.5	398	410.5	423	435.5	448	460.5
Weight (g)	88	91.2	94.4	97.5	100.7	103.9	107	110.2	113.3	116.5

Note) • For DIN rail, refer to back page 10.
• Refer to **L1** dimension on pages starting with pages 106 through 108 for lengths that correspond to the number of manifold stations.

▪ Cable assembly

AXT100-FC26- $\frac{1}{3}$

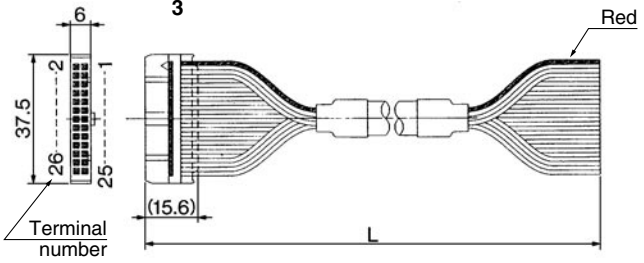

Connector Assembly for Flat Ribbon Cables

Cable length (L)	Ass'y part no.	Note
1.5m	AXT100-FC26-1	Cable 26 core x 28 AWG
3m	AXT100-FC26-2	
5m	AXT100-FC26-3	

∗ For other commercial connectors, use a 20 pins with strain relief conforming to MIL-C-83503.

Connector manufacturers' example

- **Hirose Electric Company**
- **Japan Aviation Electronics Industry, Ltd.**
- **Sumitomo 3M Limited**
- **J.S.T. Mfg. Co., Ltd.**
- **Fujitsu Limited**

▪ Plug (white)

These are inserted in unused cylinder ports and SUP, EXH ports.
Purchasing order is available in units of 10 pieces.

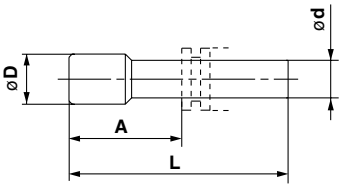

Dimensions

Applicable fittings size ød	Model	A	L	D
4	**KQ2P-04**	16	32	6
6	**KQ2P-06**	18	35	8
8	**KQ2P-08**	20.5	39	10
10	**KQ2P-10**	22	43	12
12	**KQ2P-12**	24	44.5	14
1/8"	**KQ2P-01**	16	31.5	5
5/32"	**KQ2P-03**	16	32	6
1/4"	**KQ2P-07**	18	35	8.5
5/16"	**KQ2P-09**	20.5	39	10
3/8"	**KQ2P-11**	22	43	11.5

Manifold Option

▪ How to Order Interface Regulator

Series SY3000

ARBY3000—05—P—2

Pressure gauge connection port

05	Pressure gauge (G15-10-01)
M1	Plug (M-5P)

Regulating port

P	P port
A1	A port (P controlled type, A port regulation)
B1	B port (P controlled type, B port regulation)

Note) In the case of mounting an ARBY3000 with a pressure gauge onto a manifold, use caution that the part numbers are different between the odd no. stations and the even no. stations to avoid the gauges from interfering with each other.

Series SY5000

ARBY5000—00—P—2

Pressure gauge connection port

00	Pressure gauge (G15-10-01)
M1	Plug (M-5P)

Regulating port

P	P port
A1	A port (P controlled type, A port regulation)
B1	B port (P controlled type, B port regulation)

ARBY3000-05-□-2
(For odd number stations)

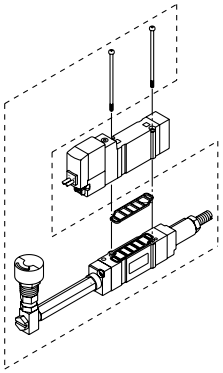

ARBY3000-06-□-2
(For even number stations)

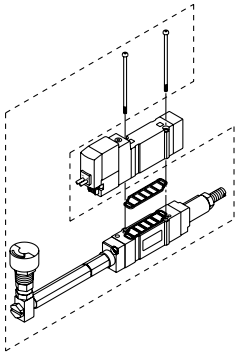

ARBY3000-M1-□-2

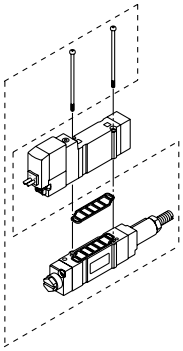

ARBY5000-00-□-2

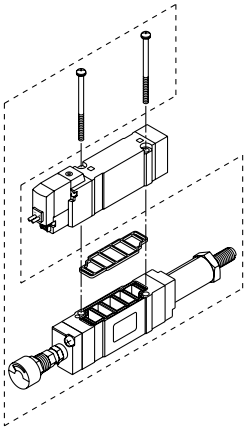

ARBY5000-M1-□-2

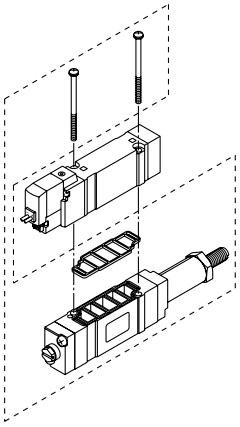

Series SY7000

ARBY7000—00—P—2

Pressure gauge connection port

00	Pressure gauge (G15-10-01)
M1	Plug (M-5P)

Regulating port

P	P port
A1	A port (P controlled type, A port regulation)
B1	B port (P controlled type, B port regulation)

ARBY7000-00-□-2

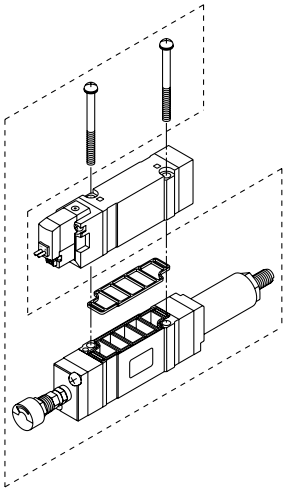

ARBY7000-M1-□-2

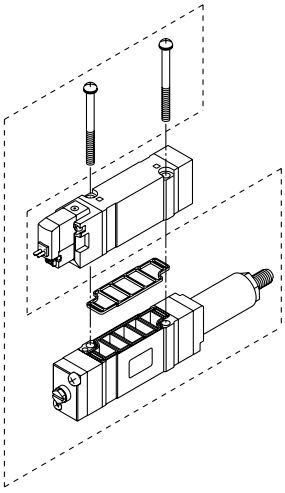

Accessory

Series	Round head combination screw	Gasket
ARBY3000	SY3000-23-10 (M2336)	SX3000-57-4
ARBY5000	M3 x 48.5, Matt nickel plated	SX5000-57-6
ARBY7000	M4 x 57, Matt nickel plated	SX7000-57-4

⚠ Caution

Mounting screw tightening torques

M2: 0.16 N·m
M3: 0.8 N·m
M4: 1.4 N·m

Base Mounted Manifold Exploded View

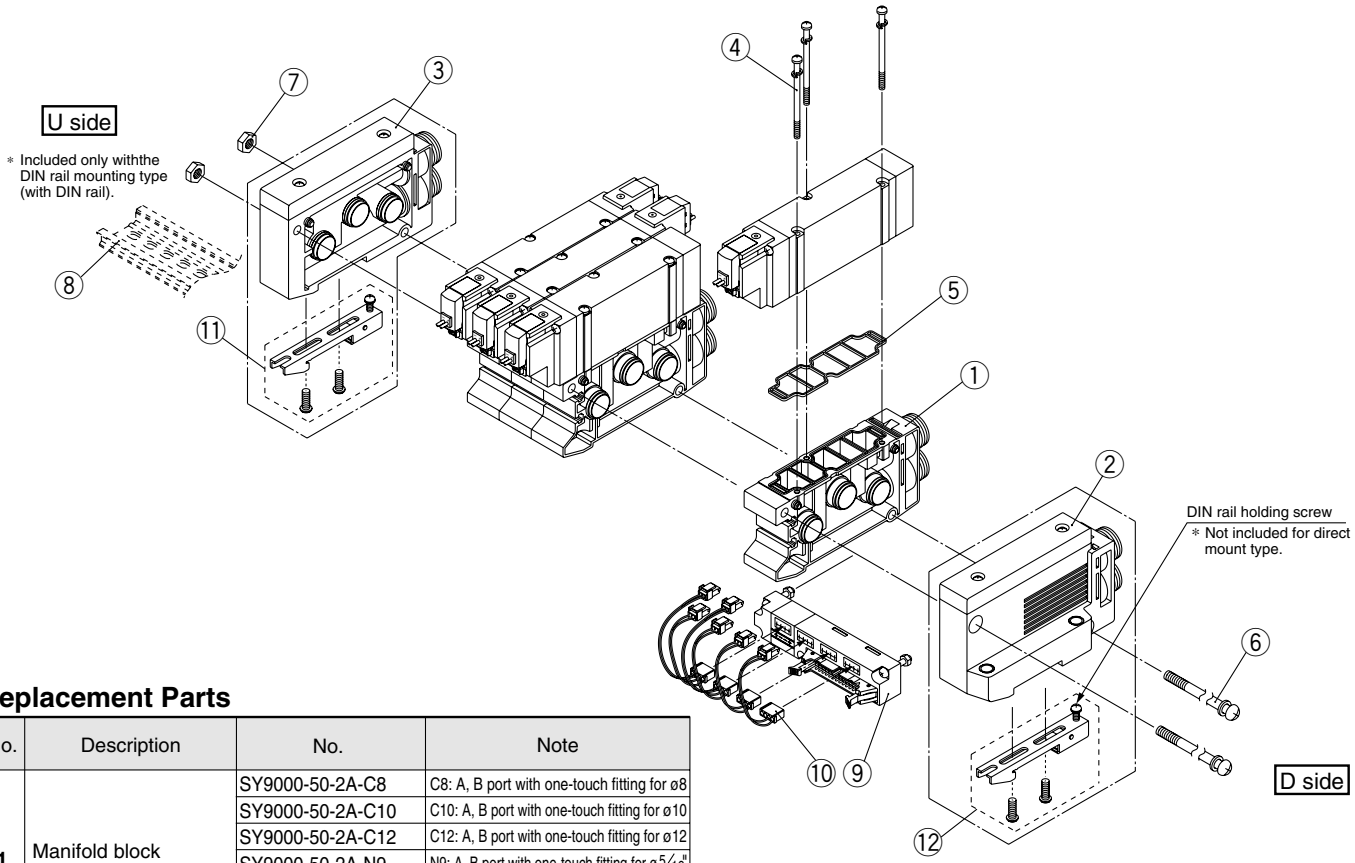

Replacement Parts

No.	Description	No.	Note
1	Manifold block assembly	SY9000-50-2A-C8	C8: A, B port with one-touch fitting for ø8
		SY9000-50-2A-C10	C10: A, B port with one-touch fitting for ø10
		SY9000-50-2A-C12	C12: A, B port with one-touch fitting for ø12
		SY9000-50-2A-N9	N9: A, B port with one-touch fitting for ø5/16"
		SY9000-50-2A-N11	N11: A, B port with one-touch fitting for ø3/8"
		SY9000-50-2A-02*	02: A, B port 1/4 (* thread type)
		SY9000-50-2A-03*	03: A, B port 3/8 (* thread type)
4	Round head combination screw	SY9000-18-2	M3 x 42, Matt nickel plated
5	Gasket	SY9000-11-2	
6	Tension bolt	SY9000-23-□	□ at the end of part number corresponds with the number of manifold station. Specify the same number as the number of stations.
7	Hexagon nut	SY9000-25-1	
8	DIN rail	VZ1000-11-4-□	Refer to page 110.
9	Wiring unit assembly	SY9000-36-□A	□ at the end of part number corresponds with the number of manifold station. Specify the same number as the number of stations (4 to 12 stations)
10	Connecter assembly	SY9000-37-□□	Refer to page 104.
11	Lead wire cover	SY9000-41-1	
12	Clamp sub assembly	SY9000-30-1A	Included only with the DIN rail mounting type.

⑪ How to assemble lead wire cover

Lead wire cover is only usable for double solenoid valves. Lead wire is inserted into the lead wire cover as magnifying figure, then push it until it touches the valve body.

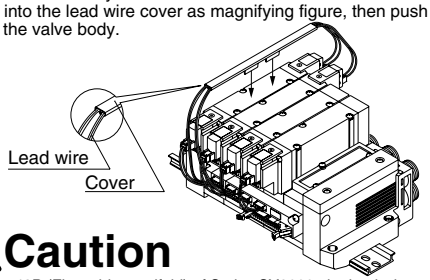

⚠Caution

For type 43P (Flat cable manifold) of Series SY9000, the lead wire cover is attached for bundling the lead wires for each solenoid. In case such as adding double solenoid valve, etc., order separately lead wire cover as well.

② SUP/EXH block assembly no. (D side mounting)

- **Direct mount type:** **SY9000-70-□□A-□**
- **DIN rail mount type:** **SY9000-72-□□A-□**

P, R port

C12	One-touch fitting for ø12
N11	One-touch fitting for ø3/8"
00	Plug

Specifications

1	Internal pilot type
3	External pilot type
4	Internal pilot / Built-in silencer type
5	External pilot / Built-in silencer type

③ SUP/EXH block assembly no. (U side mounting)

- **Direct mount type:** **SY9000-71-□□A-□**
- **DIN rail mount type:** **SY9000-73-□□A-□**

P, R port

C12	One-touch fitting for ø12
N11	One-touch fitting for ø3/8"
00	Plug

Specifications

1	Internal pilot type
3	External pilot type
4	Internal pilot / Built-in silencer type
5	External pilot / Built-in silencer type

How to Increase Manifold Bases (Series SY9000 only) Manifold case can be added at any location.

When a type 43 manifold base is added, tension bolts as well as manifold block assembly will be required. Order the tension bolt suitable for the stations after a station was increased (decreased), since the length of a tension bolt differs by the number of stations. (For changing the number of stations for a type 43P manifold, wiring unit for the stations and lead assembly will be required.)

1. Loosen the tension bolts connecting the manifold base, and pull out both of 2 tension bolts.

   (When equipped with a DIN rail, loosen one DIN rail holding screw on either U side or D side.)

2. Separate the blocks at the location where station expansion is desired.
3. Mount additional manifold block assembly.
4. Press block-to-block so that there's no gap. After connection, insert a tension bold for desired stations and then tighten it.

   ⚠ **Caution** (Tightening torque: 2.9 N·m)

   (When equipped with a DIN rail, be sure to tighten the DIN rail holding screws after tightening the tension bolts. Tightening torque: 1.4 N·m)

⚠ Caution

1. Be sure to shut off the power and air supplies before disassembly. Furthermore, since air may remain inside the actuator, piping and manifold, confirm that the air is completely exhausted before performing any work.
2. When disassembly and assembly are performed, air leakage may result if connections between blocks and tightening of the end block's holding screw, is inadequate.
3. By adding wiring unit assembly to type 43 manifold, it can be changed to type 43P manifold, too.

How to Replace A, B Port Fitting Assembly

By replacing manifold block fitting assemblies or the threaded port block assembly of a type 43(P) manifold, the port size of the A and B ports can be changed. To replace these parts, remove the clip with a flat head screwdriver after the valve has been removed. Insert the fitting assemblies or threaded port block assembly, and then reinsert the clip so that it does not protrude from the manifold block.

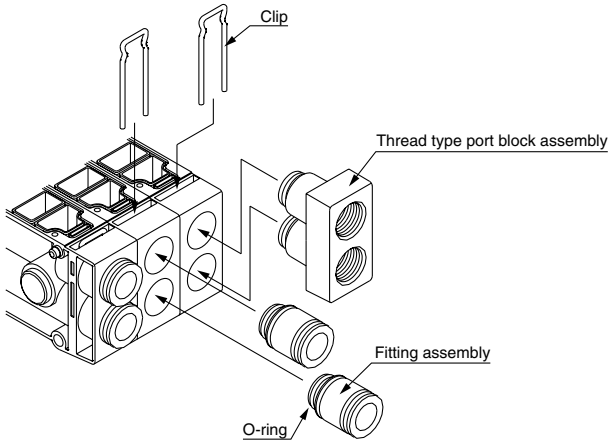

Fitting Assembly Part No.

Port size	No.	Note
One-touch fitting assembly for ø8	VVQ4000-50B-C8	
One-touch fitting assembly for ø10	VVQ4000-50B-C10	
One-touch fitting assembly for ø12	VVQ4000-50B-C12	
One-touch fitting for ø 5/16"	VVQ4000-50B-N9	
One-touch fitting for ø 3/8"	VVQ4000-50B-N11	
1/4 threaded type port block assembly	SY9000-58A-02∗	–∗ at the end of part number denotes the thread type.
3/8 threaded type port block assembly	SY9000-58A-03∗	–∗ at the end of part number denotes the thread type.
Plug assembly	SY9000-62-1A	

Note 1) Be careful to avoid damage or contamination of O-rings, as this can cause air leakage.
Note 2) Although replacing the One-touch fittings of P, R port is possible, use caution in the case where solenoid valves are used at the same time when using the smaller sized fittings than the standard size (ø12). Because they may not be able to supply or exhaust air sufficiently in comparison to the valve performance. Also, although the fittings used for A, B port are the same as for P, R port, it is not possible to use the threaded type port block assembly.

Type 45

5 Port Solenoid Valve
Series SY3000/5000
Base Mounted
Stacking Type/DIN Rail Mounted
Individual Wiring

How to Order Manifold

SS5Y 3 – 45 – 05 U C6 [ ] -Q

Series

3	SY3000
5	SY5000

Valve stations

02	2 stations
⋮	⋮
20	20 stations

SUP/EXH block assembly mounting position

Symbol	Mounting position	Applicable no. of stations
U	U side	2 to 10 stations
D	D side	
B	(Both sides)	2 to 20 stations
M*	Special specifications	

* For special specifications, indicate separately by the manifold specification sheet.

A, B port size

One-touch fitting (Metric size)

Symbol	Port size	Applicable series
C4	One-touch fitting for ø4	SY3000
C6	One-touch fitting for ø6	
M	Mixed	
C4	One-touch fitting for ø4	SY5000
C6	One-touch fitting for ø6	
C8	One-touch fitting for ø8	
M	Mixed	

One-touch fitting (Inch size)

Symbol	Port size	Applicable series
N3	One-touch fitting for ø5/32"	SY3000
N7	One-touch fitting for ø1/4"	
M	Mixed	
N3	One-touch fitting for ø5/32"	SY5000
N7	One-touch fitting for ø1/4"	
N9	One-touch fitting for ø5/16"	
M	Mixed	

* In the case of mixed specifications (M), indicate separately on the manifold specification sheet.

Option

When a longer DIN rail is desired than the specified stations, specify the station number to be required. (20 stations at maximum)

For external pilot specifications and built-in silencer, refer to page 205.

How to Order Valve Manifold Assembly (Example)

Example

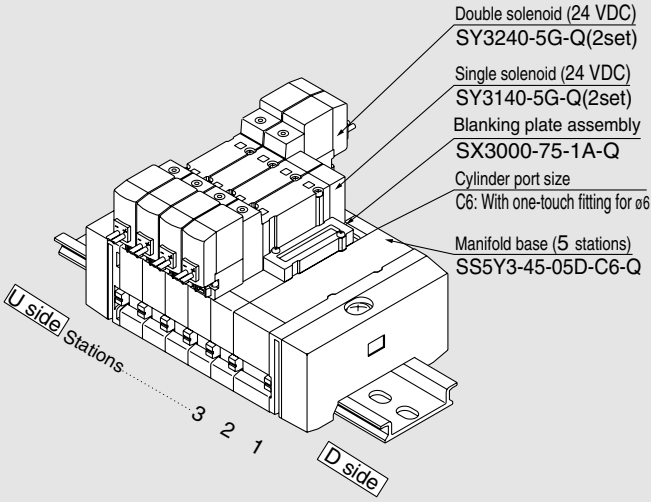

SS5Y3-45-05D-C6-Q **1 set (Type 45, 5 station manifold base part no.)**
***SX3000-75-1A-Q** **1 set (Blanking plate assembly part no.)**
***SY3140-5G-Q** **2 sets (Single solenoid part no.)**
***SY3240-5G-Q** **2 sets (Double solenoid part no.)**

→ The asterisk denotes the symbol for assembly. Prefix it to the part nos. of the solenoid valve, etc.

The valve arrangement is numbered as the 1st. station from D side regardless of the mounting position of SUP/EXH block assembly. In ordering, specify the part nos. in the order from the 1st. station on D side. Besides, when the arrangement will be complicated, fill out the manifold specification sheet to instruct us.

How to Order Valve

SY 5 2 40 □ — 5 L □ □ -Q

Series

3	SY3000
5	SY5000

Type of actuation

1	2 position single
2	2 position double
3	3 position closed center
4	3 position exhaust center
5	3 position pressure center

Coil specifications

-	Standard
T	With power saving circuit (24, 12 VDC only)

∗ Power saving circuit is not available in the case of D, DO or W□ type.

Rated voltage

For DC

5	24 VDC
6	12 VDC
V	6 VDC
S	5 VDC
R	3 VDC

AC (Hz) 50/60

1	100 VAC
2	200 VAC
3	110 VAC [115 VAC]
4	220 VAC [230 VAC]

∗ DC specifications of type D and DO is only available with 12 and 24 VDC.
∗ AC specification is only available with D and DO type.
∗ D and DO only available for SY5000.

Manual override

-	Non-locking push type
D	Push-turn locking slotted type
E	Push-turn locking lever type

Light/surge voltage suppressor

Electrical entry for G, H, L, M, W

-	Without light/surge voltage suppressor
S	With surge voltage suppressor
Z	With indicator light and surge voltage suppressor
R	With surge voltage suppressor (Non-polar type)
U	With light/surge voltage suppressor (Non-polar type)

∗ Power saving circuit is only available in the "Z" type.

Electrical entry for D (SY5000 only)

-	Without light/surge voltage suppressor
S	With surge voltage suppressor (Non-polar type)
Z	With light/surge voltage suppressor (Non-polar type)

∗ DOZ is not available.
∗ For AC voltage valves there is no “S” option. It is already built-in to the rectifier circuit.

Electrical entry

24, 12, 6, 5, 3 VDC			24, 12 VDC/ 100, 110, 200, 220 VAC	24, 12, 6, 5, 3 VDC
Grommet	**L plug connector**	**M plug connector**	**DIN terminal**	**M8 connector** ∗
G: Lead wire length 300 mm **H:** Lead wire length 600 mm	**L:** With lead wire (Length 300 mm) **LN:** Without lead wire **LO:** Without connector	**M:** With lead wire (Length 300 mm) **MN:** Without lead wire **MO:** Without connector	**(SY5000 only)** **D:** With connector **DO:** Without connector	**WO:** Without connector cable **W□:** With connector cable Note 1)

∗ LN, MN type: with 2 sockets.
∗ D and DO only available for SY5000.
∗ DIN terminal type “Y” which conforms to EN-175301-803C (former DIN43650C) is also available. For details, refer to page 210.
∗ For connector cable of M8 connector, refer to back page 12.
∗ Connector M8 type “WA” conforming to IEC 60947-5-2 standard, is also available. For details, see page 211.
Note 1) Enter the cable length symbols in □. Please be sure to fill in the blank referring to back page 13.

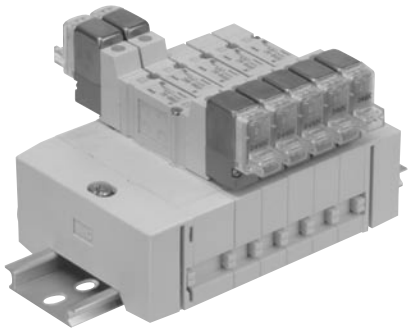

Manifold Specifications

Model		SS5Y3-45	SS5Y5-45
Applicable valve		SY3□40	SY5□40
Manifold type		Stacking type/DIN rail mounted	
P (SUP)/R (EXH)		Common SUP, Common EXH	
Valve stations		2 to 20 stations Note 1)	
A, B port Porting specifications	Location	Base	
	Direction	Side	
Port size	P, R port	C8 (One-touch fitting for ø8)	C10 (One-touch fitting for ø10)
	A, B port	C4 (One-touch fitting for ø4) C6 (One-touch fitting for ø6)	C4 (One-touch fitting for ø4) C6 (One-touch fitting for ø6) C8 (One-touch fitting for ø8)
Manifold base weight W (g), n: Stations		2 to 10 stations: W = 22n + 118 11 to 20 stations: W = 22n + 140	2 to 10 stations: W = 47n + 156 11 to 20 stations: W = 47n + 190

Note 1) For more than 11 stations, supply pressure to P port on both sides and exhaust from R port on both sides.

Flow Characteristics

Model	Port size		Flow characteristics							
	1 ,5 ,3 (P ,EA ,EB)	4 ,2 (A ,B)	1 → 4/2 (P → A/B)				4/2 → 5/3 (A/B → EA/EB)			
			C (dm³/(s·bar))	b	Cv	Q[ℓ/min(ANR)]*	C (dm³/(s·bar))	b	Cv	Q[ℓ/min(ANR)]*
SS5Y3-45	C8	C6	0.88	0.21	0.22	212	0.95	0.18	0.22	225
SS5Y5-45	C10	C8	2.2	0.24	0.53	539	2.5	0.18	0.58	592

Note) The value is for manifold base with 5 stations and individually operated 2 position type.

* These values have been calculated according to ISO6358 and represent the flow rate measured in standard conditions at an upstream pressure of 0.6 MPa (relative pressure) and a differential pressure of 0.1MPa.

Manifold Option

▪Individual SUP spacer assembly

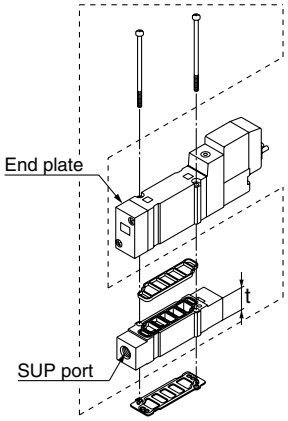

Series	Assembly part no.	Port size	t
SY3000	SY3000-38-2A-Q	M5	11
SY5000	SY5000-38-16∗A-Q	1/8	15

Note) The SUP port may be either on the lead wire side or on the end plate side.

▪Individual EXH spacer assembly

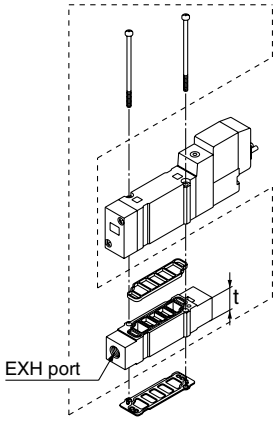

Series	Assembly part no.	Port size	t
SY3000	SY3000-39-2A-Q	M5	11
SY5000	SY5000-39-16∗A-Q	1/8	15

Note) The EXH port may be either on the lead wire side or on the end plate side.

▪Blanking plate assembly

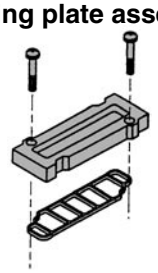

Series	Assembly part no.
SY3000	SX3000-75-1A-Q
SY5000	SX5000-76-5A-Q

∗ **Thread type**

-	Rc
F	G
N	NPT
T	NPTF

⚠ Caution

Mounting screw tightening torques

M2: 0.16 N·m
M3: 0.8 N·m
M4: 1.4 N·m

▪Dimensions/DIN rail

VZ1000 – 11 – 1 – □

Refer to L dimensions

∗ Fill in □ with an appropriate no. listed on the table of DIN rail dimensions shown below.

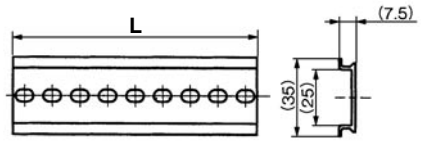

No.	0	1	2	3	4	5	6	7	8	9	10
L Dimension	98	110.5	123	135.5	148	160.5	173	185.5	198	210.5	223
No.	11	12	13	14	15	16	17	18	19	20	21
L Dimension	235.5	248	260.5	273	285.5	298	310.5	323	335.5	348	360.5
No.	22	23	24	25	26	27	28	29	30	31	32
L Dimension	373	385.5	398	410.5	423	435.5	448	460.5	473	485.5	498
No.	33	34	35	36	37	38	39	40	41	42	43
L Dimension	510.5	523	535.5	548	560.5	573	585.5	598	610.5	623	635.5
No.	44	45	46	47	48	49	50	51	52	53	54
L Dimension	648	660.5	673	685.5	698	710.5	723	735.5	748	760.5	773
No.	55	56	57	58	59	60	61	62	63	64	65
L Dimension	785.5	798	810.5	823	835.5	848	860.5	873	885.5	898	910.5
No.	66	67	68	69	70	71					
L Dimension	923	935.5	948	960.5	973	985.5					

∗ Refer to L1 dimension on pages starting with page 121 for lengths that correspond to the number of manifold stations.

▪SUP blocking disk

By installing a SUP blocking disk in the pressure supply passage of a manifold valve, it is possible to supply two or more different high and low pressures to one manifold.



Series	No.
SY3000	SX3000-77-1A
SY5000	SX5000-77-1A

▪EXH blocking disk

By installing an EXH blocking disk in the exhaust passage of a manifold valve, it is possible to divide the valve's exhaust so that it does not affect another valve. (Two blocking disks are needed to divide both exhausts.)



Series	No.
SY3000	SX3000-77-1A
SY5000	SX5000-77-1A

▪Label for block disk

The labels shown below are used on manifold stations containing SUP/EXH blocking disk(s) to show their location. (3 pcs. each)

VZ3000-123-1A

Label for SUP block disk | Label for EXH block disk | Label for SUP/EXH block disk



Note) When a block disk is concurrently ordered by specifying on the manifold specification sheet, etc., a label will be stuck on the position where block disk is mounted.

▪Silencer with One-touch fitting

The silencer plugs directly into the One-touch fittings of the manifold.

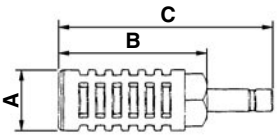

Series	Model	Effective area	A	B	C
For SY3000 (ø8)	AN203-KM8	14 mm²	ø16	26	51
For SY5000 (ø10)	AN200-KM10	26 mm²	ø22	53.8	80.8
	AN300-KM10	30 mm²	ø25	70	97

▪Plug (white)

These are inserted in unused cylinder ports and SUP, EXH ports. Purchasing order is available in units of 10 pieces.

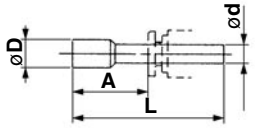

Dimensions

Applicable fittings size ød	Model	A	L	D
4	**KQ2P-04**	16	32	6
6	**KQ2P-06**	18	35	8
8	**KQ2P-08**	20.5	39	10
10	**KQ2P-10**	22	43	12
1/8"	**KQ2P-01**	16	31.5	5
5/32"	**KQ2P-03**	16	32	6
1/4"	**KQ2P-07**	18	35	8.5
5/16"	**KQ2P-09**	20.5	39	10

Manifold Option

▪ How to Order Interface Regulator (SY3000, 5000 only)

Series SY3000

ARBY3000 — 05 — P — 2

Regulating port

P	P port
A1	A port (P controlled type, A port regulation)
B1	B port (P controlled type, B port regulation)

Pressure gauge connection port

05	Pressure gauge (G15-10-01) [for odd number station]
06	Pressure gauge (G15-10-01) [for even number station]
M1	Plug (M-5P)

∗ In the case of mounting an ARBY3000 with a pressure gauge onto a manifold, use caution that the part numbers are different between the odd no. stations and the even no. stations to avoid gauges interfering with each others.

Series SY5000

ARBY5000 — 00 — P — 2

Regulating port

P	P port
A1	A port (P controlled type, A port regulation)
B1	B port (P controlled type, B port regulation)

Pressure gauge connection port

00	Pressure gauge (G15-10-01)
M1	Plug (M-5P)

ARBY3000-05-□-2
(For mounting odd number stations)

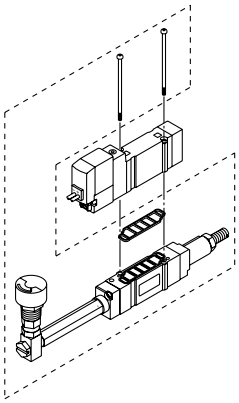

ARBY3000-06-□-2
(For mounting even number stations)

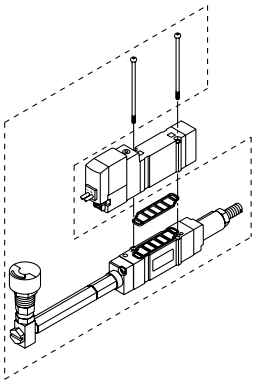

ARBY3000-M1-□-2

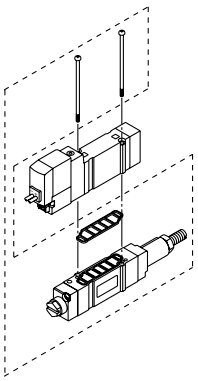

ARBY5000-00-□-2

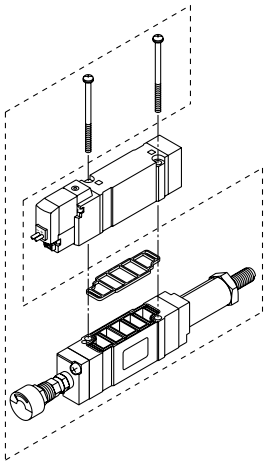

ARBY5000-M1-□-2

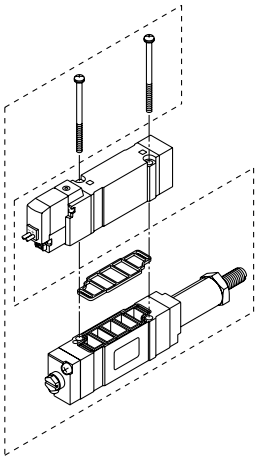

Accessory

Series	Round head combination screw	Gasket
ARBY3000	SY3000-23-10 (M2 x 36)	SX3000-57-4
ARBY5000	M3 x 48.5, Matt nickel plated	SX5000-57-6

⚠ Caution

Mounting screw tightening torques

M2: 0.17 N·m
M3: 0.8 N·m

Dimensions: Series SY3000

SS5Y3-45-[Stations] D-C4, N3 / C6, N7 -Q

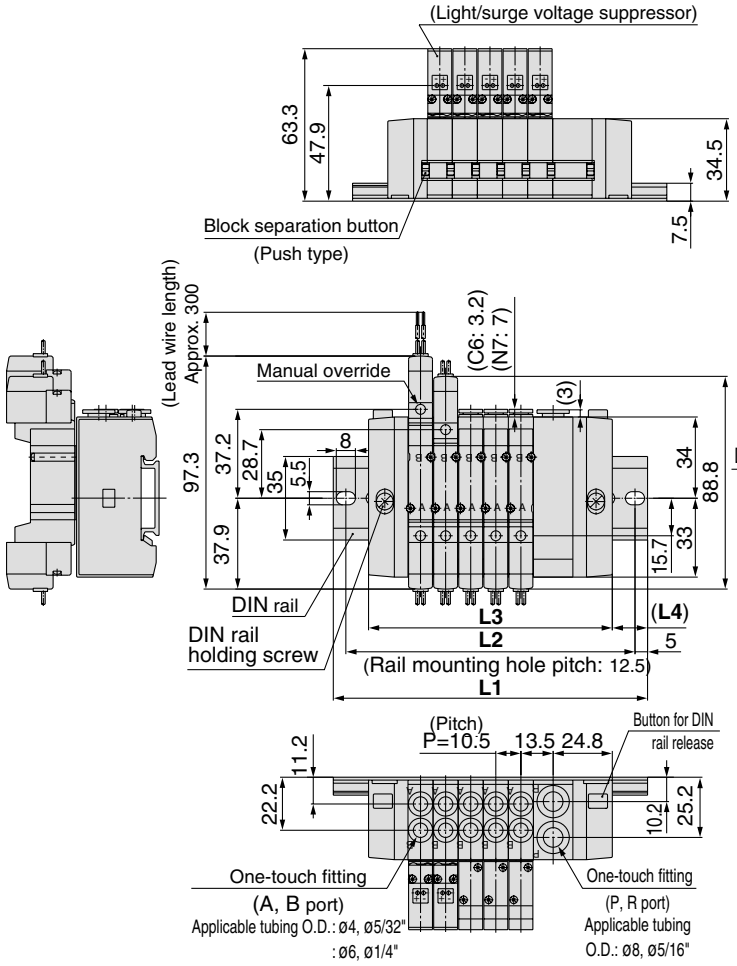

SS5Y3-45-[Stations] U-C4, N3 / C6, N7 -Q

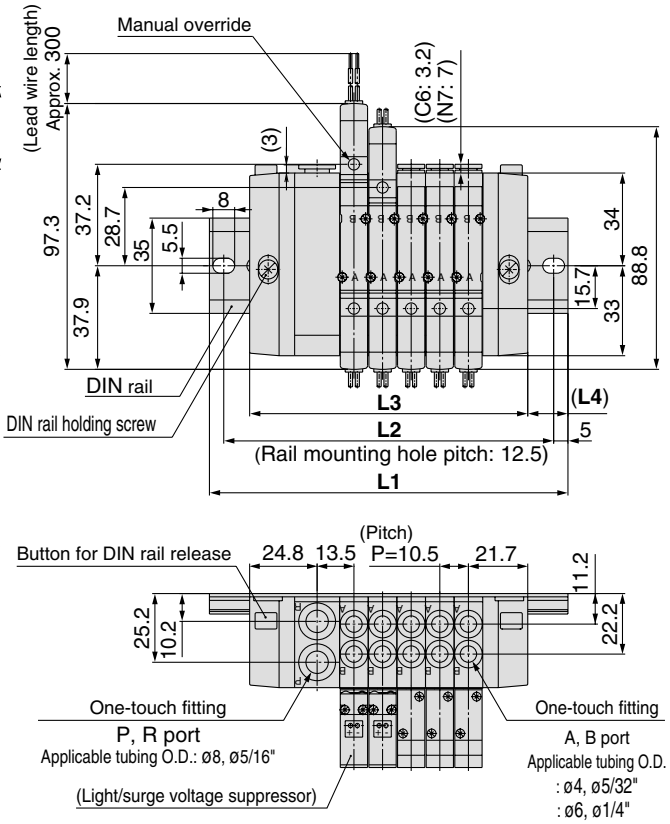

Stations n	2 stations	3	4	5	6	7	8	9	10 stations
L1	98	110.5	123	135.5	148	148	160.5	173	185.5
L2	87.5	100	112.5	125	137.5	137.5	150	162.5	175
L3	70.5	81	91.5	102	112.5	123	133.5	144	154.5
L4	13.5	14.5	15.5	16.5	17.5	12.5	13.5	14.5	15.5

With interface regulator (with gauge)

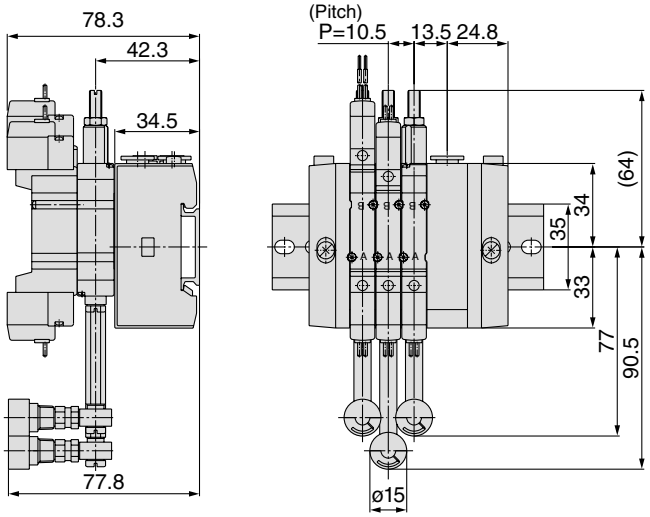

Dimensions: Series SY3000

SS5Y3-45-[Stations]B-C4, C6, N3, N7-Q

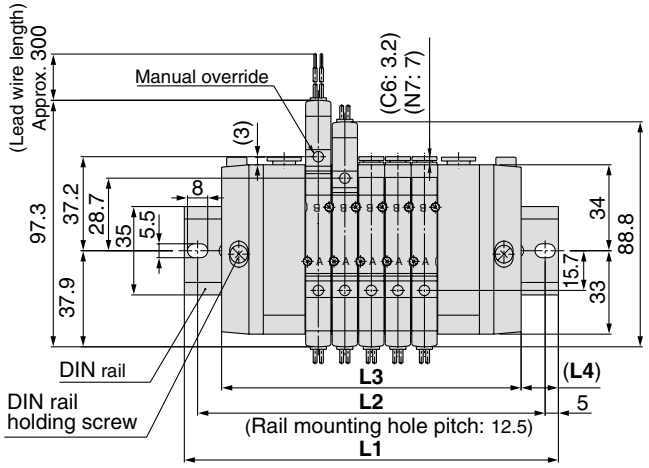

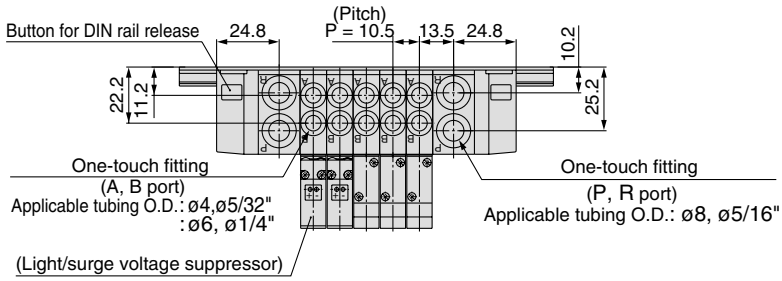

Stations n	2 stations	3	4	5	6	7	8	9	10 stations
L1	110.5	123	135.5	148	160.5	173	185.5	185.5	198
L2	100	112.5	125	137.5	150	162.5	175	175	187.5
L3	87	97.5	108	118.5	129	139.5	150	160.5	171
L4	11.5	12.5	13.5	14.5	15.5	16.5	17.5	12.5	13.5

Stations n	11 stations	12	13	14	15	16	17	18	19	20 stations
L1	210.5	223	235.5	248	248	260.5	273	285.5	298	310.5
L2	200	212.5	225	237.5	237.5	250	262.5	275	287.5	300
L3	181.5	192	202.5	213	223.5	234	244.5	255	265.5	276
L4	14.5	15.5	16.5	17.5	12	13	14	15	16	17

L plug connector

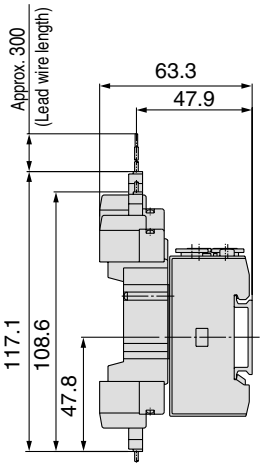

M plug connector

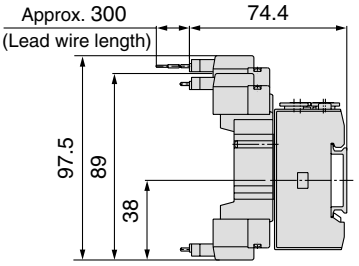

M8 connector (WO)

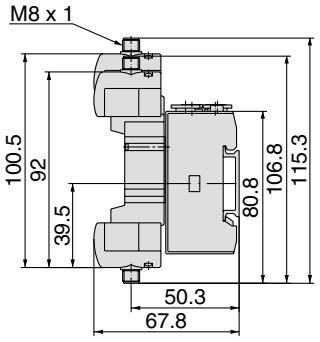

Note) Refer to back page 12 for dimensions of connector types.

Dimensions: Series SY5000

SS5Y5-45-[Stations] D-[C4, N3 / C6, N7 / C8, N9]-Q

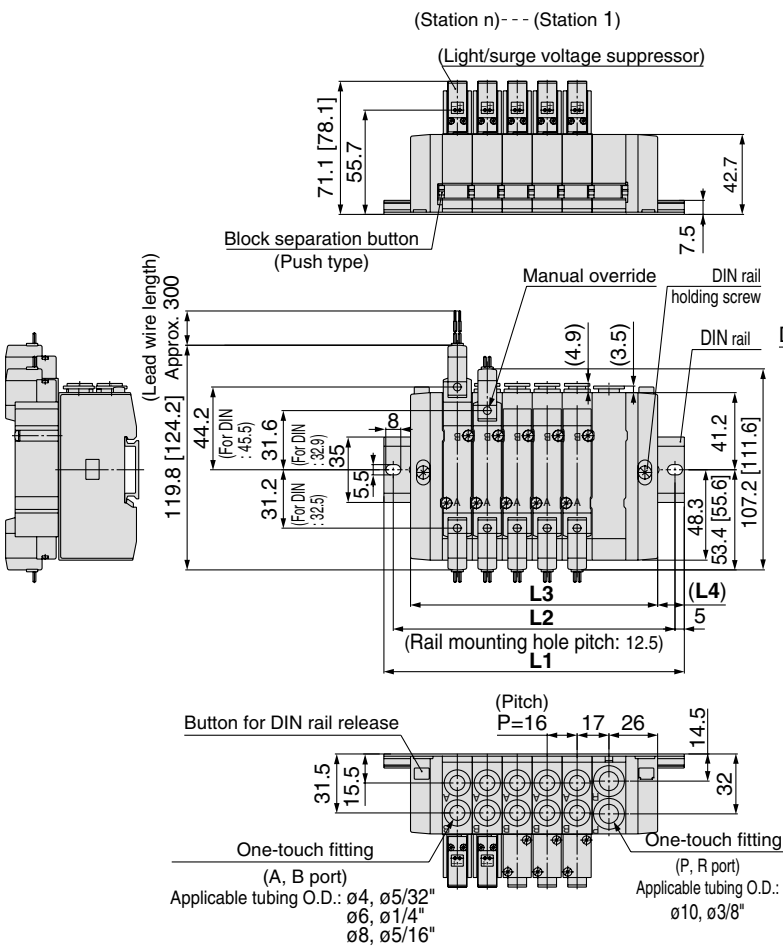

SS5Y5-45-[Stations] U-[C4, N3 / C6, N7 / C8, N9]-Q

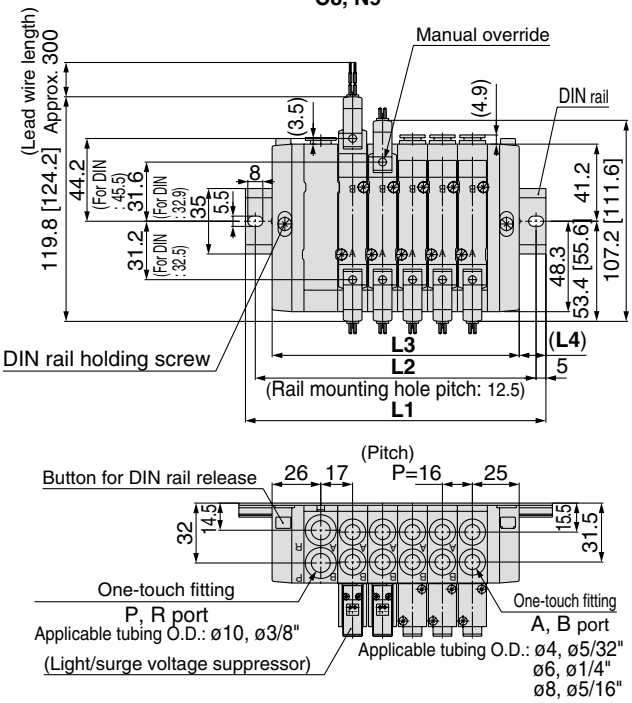

Stations n	2 stations	3	4	5	6	7	8	9	10 stations
L1	110.5	135.5	148	160.5	173	198	210.5	223	235.5
L2	100	125	137.5	150	162.5	187.5	200	212.5	225
L3	84	100	116	132	148	164	180	196	212
L4	13	17.5	16	14	12.5	17	15	13.5	11.5

With interface regulator (with gauge)

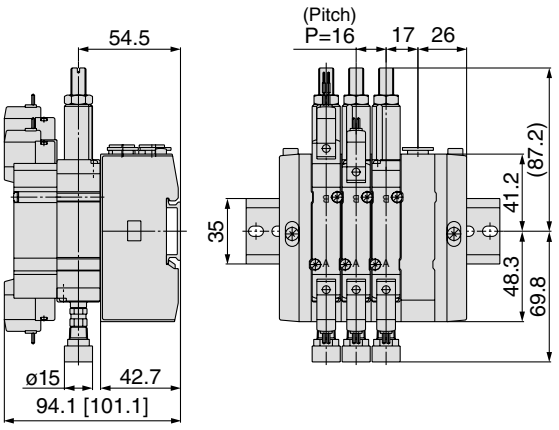

Dimensions: Series SY5000

SS5Y3-45- Stations B- C4, N3 / C6, N7 / C8, N9 -Q

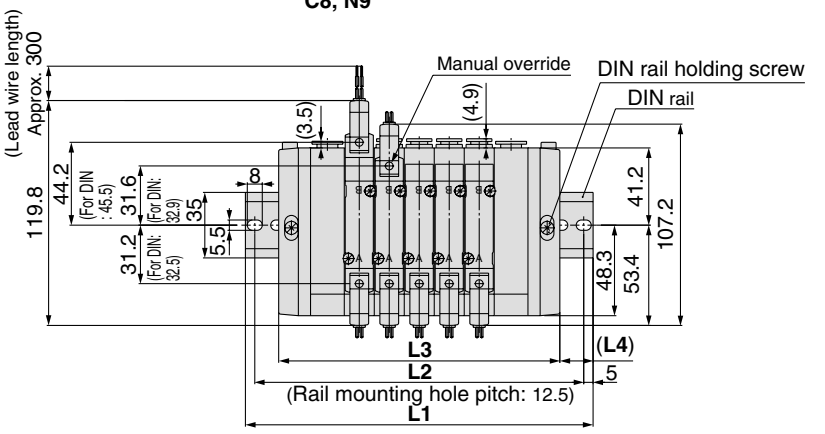

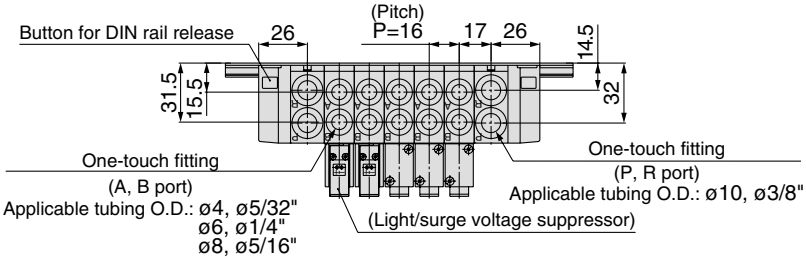

Stations n	2 stations	3	4	5	6	7	8	9	10 stations
L1	135.5	148	160.5	185.5	198	210.5	223	248	260.5
L2	125	137.5	150	175	187.5	200	212.5	237.5	250
L3	102	118	134	150	166	182	198	214	230
L4	16.5	15	13	17.5	16	14	12.5	17	15

Stations n	11 stations	12	13	14	15	16	17	18	19	20 stations
L1	273	285.5	310.5	323	335.5	360.5	373	385.5	398	423
L2	262.5	275	300	312.5	325	350	362.5	375	387.5	412.5
L3	246	262	278	294	310	326	342	358	374	390
L4	13.5	11.5	16	14.5	12.5	17	15.5	13.5	12	16.5

L plug connector

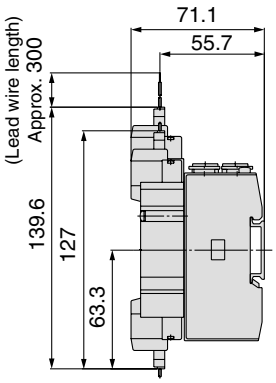

M plug connector

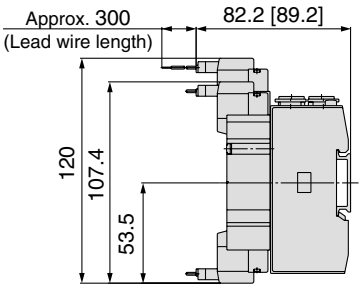

M8 connector (WO)

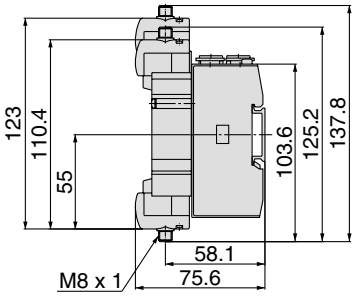

DIN terminal (D)

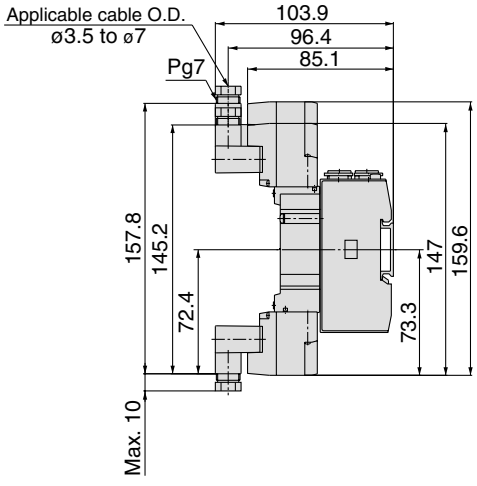

Note) Refer to back page 12 for dimensions of connector types.

DIN Rail Manifold Exploded View

Type 45

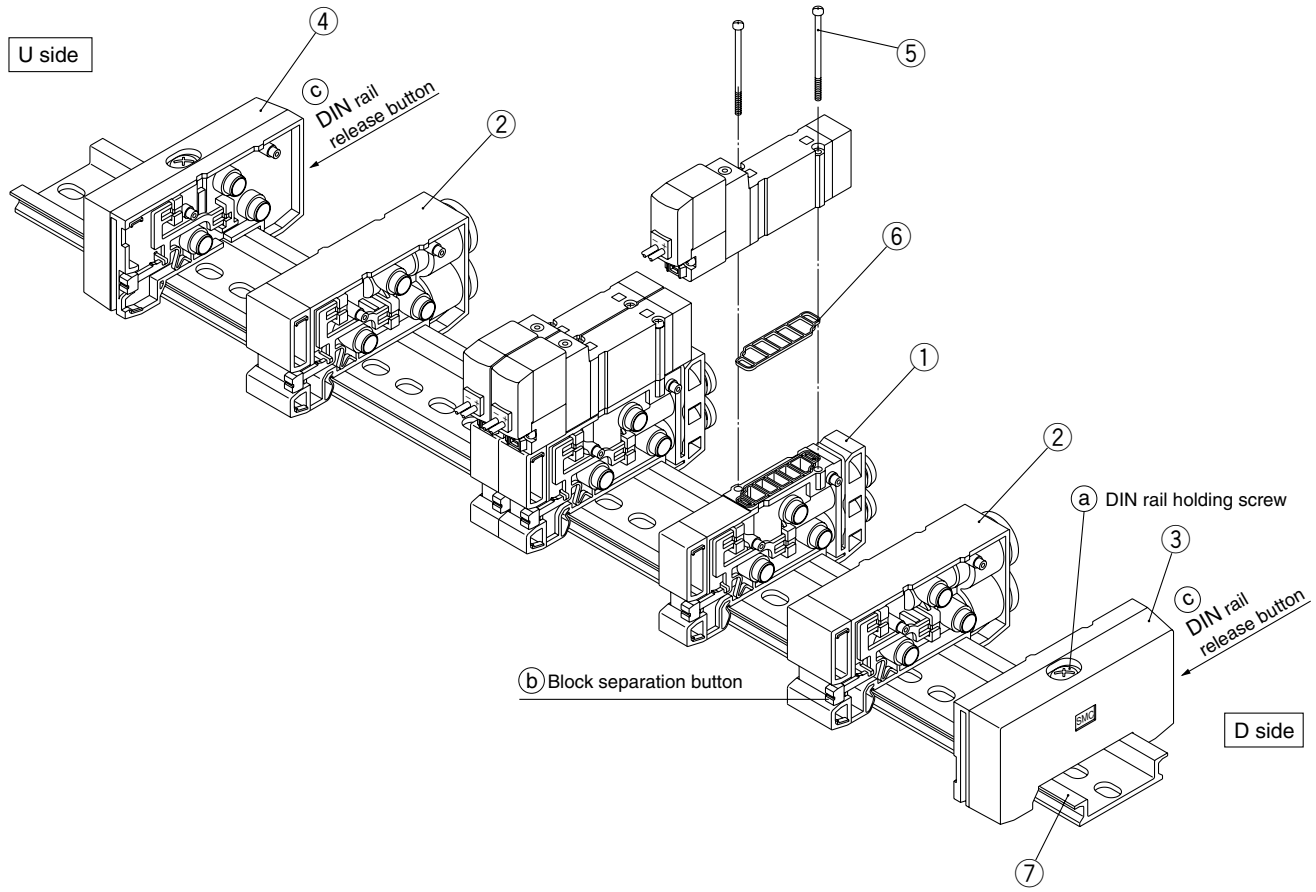

Replacement Parts

No.	Description	No.		Note
		SY3000	**SY5000**	
1	Manifold block assembly	SX3000-50-1A-□□-Q	SX5000-50-1A-□□-Q	□□: SY3000 (Metric size) C4: With one-touch fitting for ø4 (Inch size) N3: With one-touch fitting for ø5/32" C6: With one-touch fitting for ø6 N7: With one-touch fitting for ø1/4" SY5000 (Metric size) C4: With one-touch fitting for ø4 (Inch size) N3: With one-touch fitting for ø5/32" C6: With one-touch fitting for ø6 N7: With one-touch fitting for ø1/4" C8: With one-touch fitting for ø8 N9: With one-touch fitting for ø5/16" (Gasket 6 is supplied as an accessory.)
2	SUP/EXH block assembly	(Metric size) SX3000-51-1A (Inch size) SX3000-51-15A	(Metric size) SX5000-51-1A (Inch size) SX5000-51-15A	P, R port SY3000 (Metric size) With one-touch fitting for ø8 (Inch size) With one-touch fitting for ø5/16" P, R port SY5000 (Metric size) With one-touch fitting for ø10 (Inch size) With one-touch fitting for ø3/8"
3	End block assembly R	SX3000-52-1A-Q	SX5000-52-1A-Q	For D side
4	End block assembly R	SX3000-53-1A-Q	SX5000-53-1A-Q	For U side
5	Round head combination screw	SY3000-23-4	M3 x 26 (Matt nickel plated)	
6	Gasket	SX3000-57-4	SX5000-57-6	
7	DIN rail	VZ1000-11-1-□		Refer to page 118.

DIN Rail Manifold Exploded View

How to Increase Manifold Bases Station expansion is possible at any position.

1. Loosen DIN rail holding screw ⓐ fixing the manifold base until it begins to turn idly. (While pressing DIN rail releasing buttons ⓒ, at two locations, separate the manifold base from the DIN rail.)
2. Press manifold block assembly dividing button ⓑ, that are at the location where manifold bases are to be added, until button ⓑ locks, and then separate the block assemblies.
3. Mount additional manifold block assembly on the DIN rail as shown in the figure 1.
4. Press the block assemblies until a click sound is produced, and tighten the DIN rail holding screw ⓐ to fix them to the DIN rail.
   ⚠**Caution** (Tightening torque: 1.4 N·m)
   (While lightly holding the blocks after fixing an end block on one side, tighten the other end block for for better sealing.)

⚠Caution

Note 1) When there are 10 or fewer manifold block assemblies, and more are added to make a total of 11 or more, a supply/exhaust block assembly must also be added.

Note 2) When disassembly and assembly are performed, air leakage may result if connections between blocks and tightening of the end block's holding screw, is inadequate. Before supplying air, confirm that there are no gaps, etc. between blocks, and that manifold blocks are securely fastened to the DIN rail. Then supply air and confirm that there is no air leakage before operating.

Fig. (1) Block mounting procedure

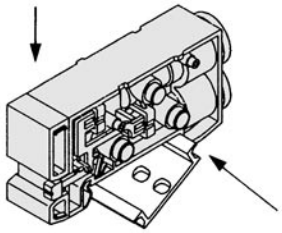

Hook the DIN rail here and press down in the direction of the arrow until a click sound is heard.

How to Change Fitting Assembly

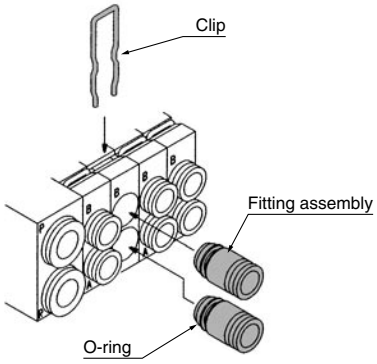

Type 45 manifold permits change in the A and B port sizes by changing the manifold block fitting assembly.
After removing the valve, remove the clip with a screwdriver, etc. For mounting a new fitting assembly, insert it and then insert a clip until it will not come out of the manifold block.

Fitting Assembly Part No.

Metric size

SY3000	One-touch fitting for ø4	VVQ1000-50A-C4
	One-touch fitting for ø6	VVQ1000-50A-C6
SY5000	One-touch fitting for ø4	VVQ1000-51A-C4
	One-touch fitting for ø6	VVQ1000-51A-C6
	One-touch fitting for ø8	VVQ1000-51A-C8

Inch size

SY3000	One-touch fitting for ø5/32"	VVQ1000-50A-N3
	One-touch fitting for ø1/4"	VVQ1000-50A-N7
SY5000	One-touch fitting for ø5/32"	VVQ1000-51A-N3
	One-touch fitting for ø1/4"	VVQ1000-51A-N7
	One-touch fitting for ø5/16"	VVQ1000-51A-N9

Note 1) P and R ports cannot be changed.
Note 2) Use caution that O-rings must be free from scratches and dust. Otherwise, air leakage may result.

Type 45-A/NA

5 Port Solenoid Valve
Series SY3000/5000
Base Mounted
Stacking Type/DIN Rail Mounted
Connector Box

How to Order Manifold

SS5Y 3 – 45 – A U 05 D C6 – [ ] -Q

Series

3	SY3000
5	SY5000

Specifications

Symbol	Specifications
A	With connector box (+COM spec.)
NA	With connector box (–COM spec.)

The style of attached lead wire assembly is different.

Connector box mounting position

Symbol	Mounting position
U	U side
D	D side

Valve stations

Symbol	Stations	Note
02	2 stations	Applicable up to 16 solenoid valves.
⋮	⋮	
16	16 stations	

SUP/EXH block assembly mounting position

Symbol	Mounting position	Applicable stations
U	U side	2 to 10 stations
D	D side	
B	Both sides	2 to 16 stations
M*	Special specifications	

* For special specifications, indicate separately by the manifold specification sheet.

A/B port size

One-touch fitting (Metric size)

Symbol	Port size	Applicable series
C4	One-touch fitting for ø4	SY3000
C6	One-touch fitting for ø6	
M	Mixed	
C4	One-touch fitting for ø4	SY5000
C6	One-touch fitting for ø6	
C8	One-touch fitting for ø8	
M	Mixed	

One-touch fitting (Inch size)

Symbol	Port size	Applicable series
N3	One-touch fitting for ø5/32"	SY3000
N7	One-touch fitting for ø1/4"	
M	Mixed	
N3	One-touch fitting for ø5/32"	SY5000
N7	One-touch fitting for ø1/4"	
N9	One-touch fitting for ø5/32"	
M	Mixed	

* In the case of mixed specifications, indicate separately on the manifold specification sheet.

Option

When a longer DIN rail is desired than the specified stations, specify the station number to be required. (Max. 20 stations)

For external pilot specifications and built-in silencer, refer to page 205.

How to Order Valve Manifold Assembly (Example)

Example (SY3000, +COM, U side)

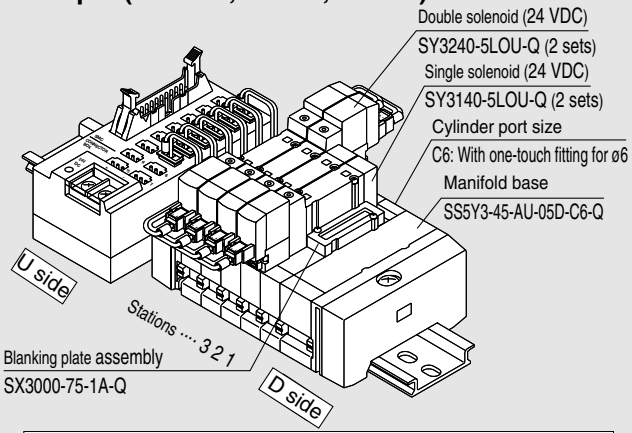

SS5Y3-45-AU-05D-C6-Q	**1 set (Type 45, 5 station manifold base part no.)**
***SX3000-75-1A-Q**	**1 set (Blanking plate assembly part no)**
***SY3140-5LOU-Q**	**2 sets (Single solenoid part no.)**
***SY3240-5LOU-Q**	**2 sets (Double solenoid part no.)**

→ The asterisk denotes the symbol for assembly. Prefix it to the part nos. of the solenoid valve, etc.

The valve arrangement is numbered as the 1st. station from D side regardless of the mounting position of connector box. In ordering, specify the part nos. in the order from the 1st. station on D side. Besides, when the arrangement will be complicated, fill out the manifold specification sheet to instruct us.

SS5Y$^{3}_{5}$-45-A$^{U}_{D}$-[ ]□-C□ is assembled with solenoid valve and lead wire assembly when shipping. When ordering manifold only (without valves/wires/options), refer to how to order on page 115 and list the connector box (VZ3000-106-1A) and the rail stopper (TXE1-SMC) below the manifold to allow for the connector box mounting at U side. (Be sure to order DIN rail 3 station longer than number of the manifold stations.) In this case, please note that dimensions, L1 and L2 on pages 131 and 132 may vary slightly.) For other components, refer to page 133.

How to Order Valve

SY 5 2 40 – 5 LOU [ ] -Q

Series

3	SY3000
5	SY5000

Type of actuation

1	2 position single
2	2 position double
3	3 position closed center
4	3 position exhaust center
5	3 position pressure center

Rated voltage

5	24 VDC

Manual override

-	Non-locking push type
D	Push-turn locking slotted type
E	Push-turn locking lever type

SMC

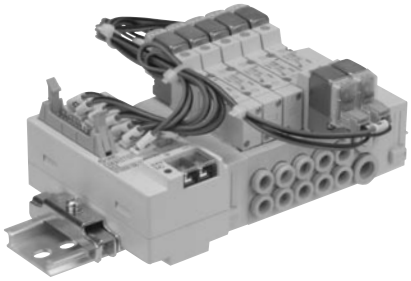

Manifold Specifications

Model		SS5Y3-45-A/NA	SS5Y5-45-A/NA
Applicable valve		SY3□40	SY5□40
Manifold type		Stacking type/DIN rail mounted	
P (SUP)/R (EXH)		Common SUP, Common EXH	
Valve stations		2 to 16 stations Note 1, 2)	
A, B port Porting specifications	Location	Base	
	Direction	Side	
Port size	P, R port	C8 (One-touch fitting for ø8)	C10 (One-touch fitting for ø10)
	A, B port	C4 (One-touch fitting for ø4) C6 (One-touch fitting for ø6)	C4 (One-touch fitting for ø4) C6 (One-touch fitting for ø6) C8 (One-touch fitting for ø8)
Manifold base weight W (g) n: Stations		2 to 10 stations: W = 26n + 207 11 to 20 stations: W = 26n + 229	2 to 10 stations: W = 52n + 245 11 to 16 stations: W = 52n + 279
Applicable flat ribbon cable connector		Flat ribbon cable connector Socket: 20 pins MIL type with strain relief conforming to MIL-C-83503	
Wiring specifications		+COM specifications (Type 45-A), –COM specifications (Type 45-NA)	

Note 1) For more than 11 stations, supply pressure to P port on both sides and exhaust from R port on both sides.
Note 2) There is a limit depending on the number of solenoids. Refer to "How to Order".

Flow Characteristics

Model	Port size		Flow characteristics							
	1, 5, 3 (P, EA, EB)	4, 2 (A, B)	1 → 4/2 (P → A/B)				4/2 → 5/3 (A/B → EA/EB)			
			C (dm³/(s·bar))	b	Cv	Q[ℓ/min(ANR)]*	C (dm³/(s·bar))	b	Cv	Q[ℓ/min(ANR)]*
SS5Y3-45-□	C8	C6	0.88	0.21	0.22	212	0.95	0.18	0.22	225
SS5Y5-45-□	C10	C8	2.2	0.24	0.53	539	2.5	0.18	0.58	592

Note) The value is for manifold base with 5 stations and individually operated 2 position type.
* These values have been calculated according to ISO6358 and represent the flow rate measured in standard conditions at an upstream pressure of 0.6 MPa (relative pressure) and a differential pressure of 0.1MPa.

Manifold Wiring Diagram (Circuit diagram for the reference layout)

+COM electric circuit diagram

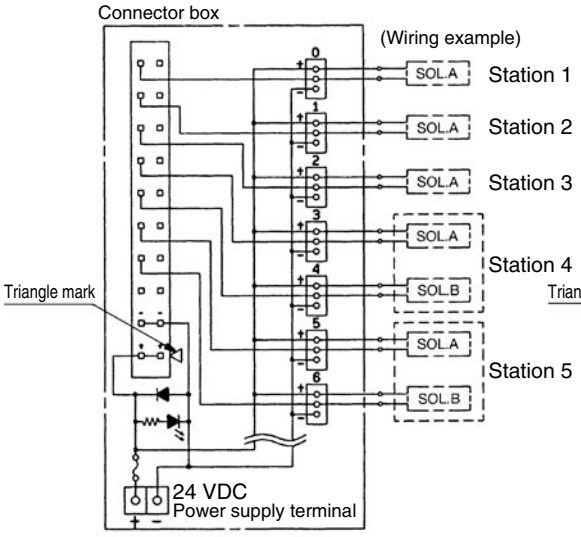

–COM electric circuit diagram

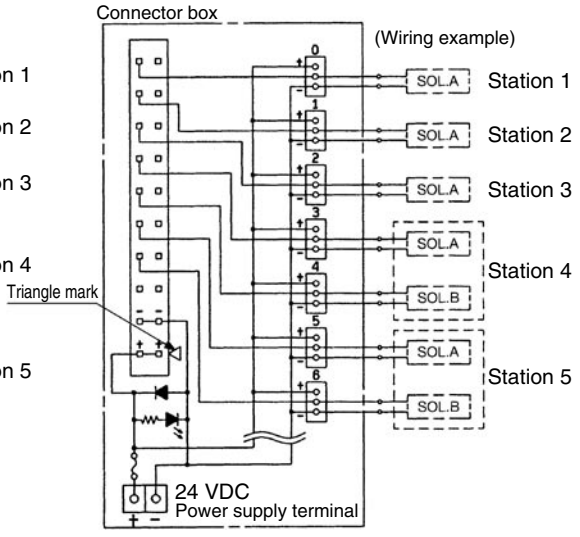

- Connector box for +COM allows transmission until G71-OD16, manufactured by OMRON Corp., to be connected directly for serial transmission. Additionally, it can also be used for the PC wiring system.
- When an external power source must be supplied to the manifold, correct polarity must be observed, otherwise damage to PLC is possible.
- The wiring of solenoid valves, corresponds with the labeled connector box 0 to 15 from D side.
- If valves other than non-polar type are used, this may cause malfunction.

Reference layout

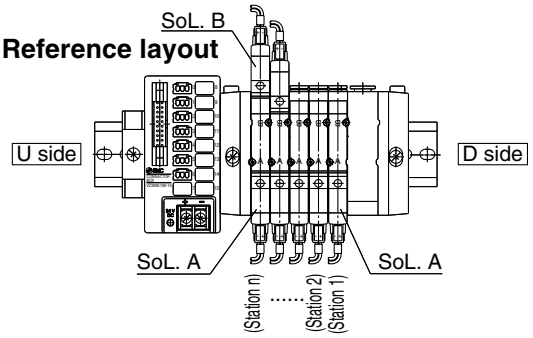

Manifold Option

▪ Individual SUP spacer assembly

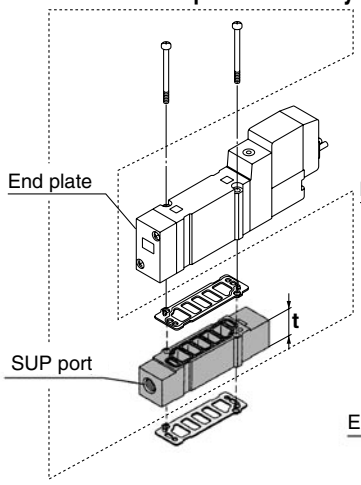

Series	Assembly part no.	Port size	t
SY3000	SY3000-38-2A-Q	M5	11
SY5000	SY5000-38-16∗A-Q	1/8	15

Note) The SUP port may be either on the lead wire side or on the end plate side. (An assembly is shipped under the condition shown in the figure.)

▪ Individual EXH spacer assembly

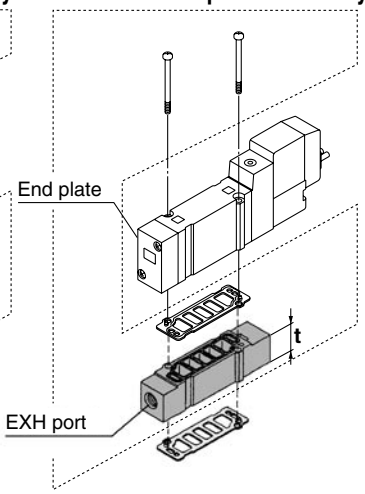

Series	Assembly part no.	Port size	t
SY3000	SY3000-39-2A-Q	M5	11
SY5000	SY5000-39-16∗A-Q	1/8	15

Note) The EXH port may be either on the lead wire side or on the end plate side. (An assembly is shipped under the condition shown in the figure.)

∗ **Thread type**

-	Rc
F	G
N	NPT
T	NPTF

▪ Blanking plate assembly

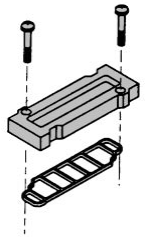

Series	Assembly part no.
SY3000	SX3000-75-1A-Q
SY5000	SX5000-76-5A-Q

⚠ Caution

Mounting screw tightening torques

M2: 0.16 N·m
M3: 0.8 N·m
M4: 1.4 N·m

▪ Cable assembly

AXT100-FC20- 1 / 3

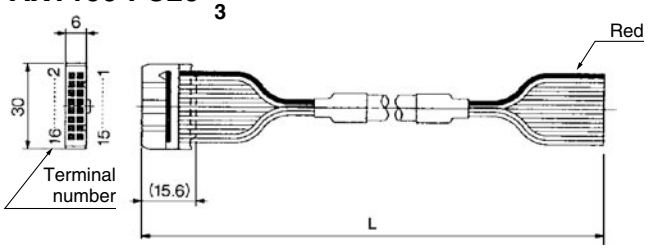

Connector Assembly for Flat Ribbon Cables

Cable length (**L**)	Assembly part no.	Note
1.5 m	AXT100-FC20-1	Cable 20 core x 22 AWG
3 m	AXT100-FC20-2	
5 m	AXT100-FC20-3	

∗ For other commercial connectors, use a 20 pins with strain relief conforming to MIL-C-83503.

Connector manufacturers' example

- **Sumitomo 3M Limited**
- **Fujitsu Limited**
- **Japan Aviation Electronics Industry, Ltd.**
- **J.S.T. Mfg. Co., Ltd.**

▪ SUP blocking disk

By installing a SUP blocking disk in the pressure supply passage of a manifold valve, it is possible to supply two or more different high and low pressures to one manifold.



Series	Part no.
SY3000	SX3000-77-1A
SY5000	SX5000-77-1A

▪ EXH blocking disk

By installing an EXH blocking disk in the exhaust passage of a manifold valve, it is possible to divide the valve's exhaust so that it does not affect another valve. (Two blocking disks are needed to divide both exhausts.)



Series	Part no.
SY3000	SX3000-77-1A
SY5000	SX5000-77-1A

▪ Label for block disk

The labels shown below are used on manifold stations containing SUP/EXH blocking disk(s) to show their location. (3 pcs. each)

VZ3000-123-1A

Label for SUP block disk

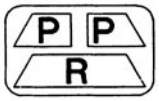

Label for EXH block disk

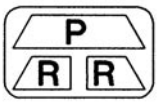

Label for SUP/EXH block disk

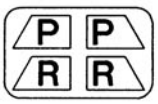

Note) When a block disk is concurrently ordered by specifying on the manifold specification sheet, etc., a label will be stuck on the position where block disk is mounted.

▪ Silencer with One-touch fitting

The silencer plugs directly into the One-touch fittings of the manifold.

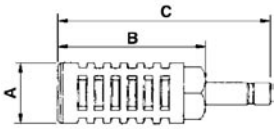

Series	Model	Effective area	A	B	C
For SY3000 (ø8)	AN203-KM8	14 mm²	ø16	26	51
For SY5000 (ø10)	AN200-KM10	26 mm²	ø22	53.8	80.8
	AN300-KM10	30 mm²	ø25	70	97

▪ Plug (white)

These are inserted in unused cylinder ports and SUP, EXH ports. Purchasing order is available in units of 10 pieces.

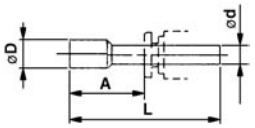

Dimensions

Applicable fittings size ø**d**	Model	**A**	**L**	**D**
4	**KQ2P-04**	16	32	6
6	**KQ2P-06**	18	35	8
8	**KQ2P-08**	20.5	39	10
10	**KQ2P-10**	22	43	12
1/8"	**KQ2P-01**	16	31.5	5
5/32"	**KQ2P-03**	16	32	6
1/4"	**KQ2P-07**	18	35	8.5
5/16"	**KQ2P-09**	20.5	39	10

⚠ Warning

When mounting a valve or spacer on the manifold base or sub-plate, etc., those mounting directions are determined. If mounted in the wrong direction, the equipment to be connected may cause malfunction. Refer to external dimensions, and then mount it.

Manifold Option

▪ How to Order Interface regulator (SY3000, 5000 only)

Series SY3000

ARBY3000 — 05 — P — 2

Regulating port

P	P port
A1	A port (P controlled type, A port regulation)
B1	B port (P controlled type, B port regulation)

Pressure gauge connection port

05	Pressure gauge (G15-10-01) [for odd number station]
06	Pressure gauge (G15-10-01) [for even number station]
M1	Plug (M-5P)

∗ In the case of mounting an ARBY3000 with a pressure gauge onto a manifold, use caution that the part numbers are different between the odd no. stations and the even no. stations to avoid the gauges from interfering with each other.

Series SY5000

ARBY5000 — 00 — P — 2

Regulating port

P	P port
A1	A port (P controlled type, A port regulation)
B1	B port (P controlled type, B port regulation)

Pressure gauge connection port

00	Pressure gauge (G15-10-01)
M1	Plug (M-5P)

ARBY3000-05-□-2
(For odd number stations)

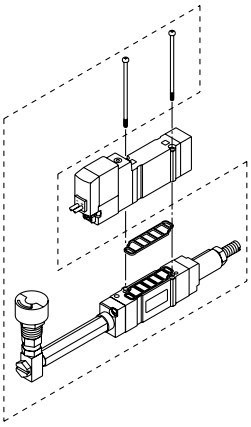

ARBY3000-06-□-2
(For even number stations)

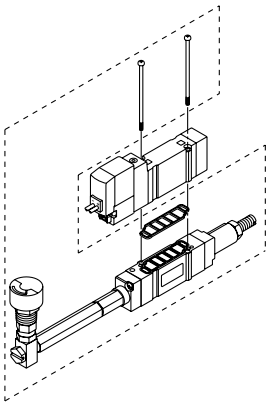

ARBY3000-M1-□-2

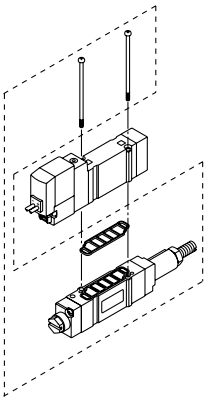

ARBY5000-00-□-2

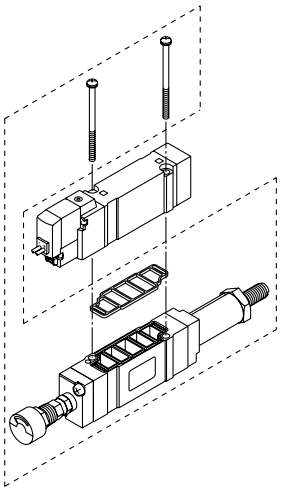

ARBY5000-M1-□-2

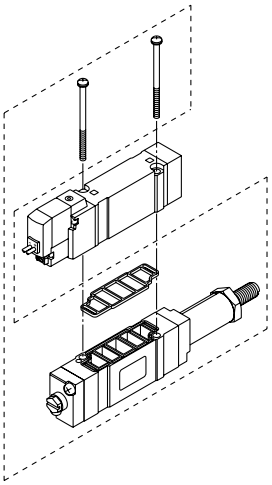

Accessory

Series	Round head combination screw	Gasket
ARBY3000	SY3000-23-10 (M2 x 36)	SX3000-57-4
ARBY5000	M3 x 48.5, Matt nickel plated	SX5000-57-6

⚠ Caution

Mounting screw tightening torques

M2: 0.16 N·m
M3: 0.8 N·m

Dimensions: Series SY3000

SS5Y3-45-AU- Stations D- C4, N3 C6, N7 -Q

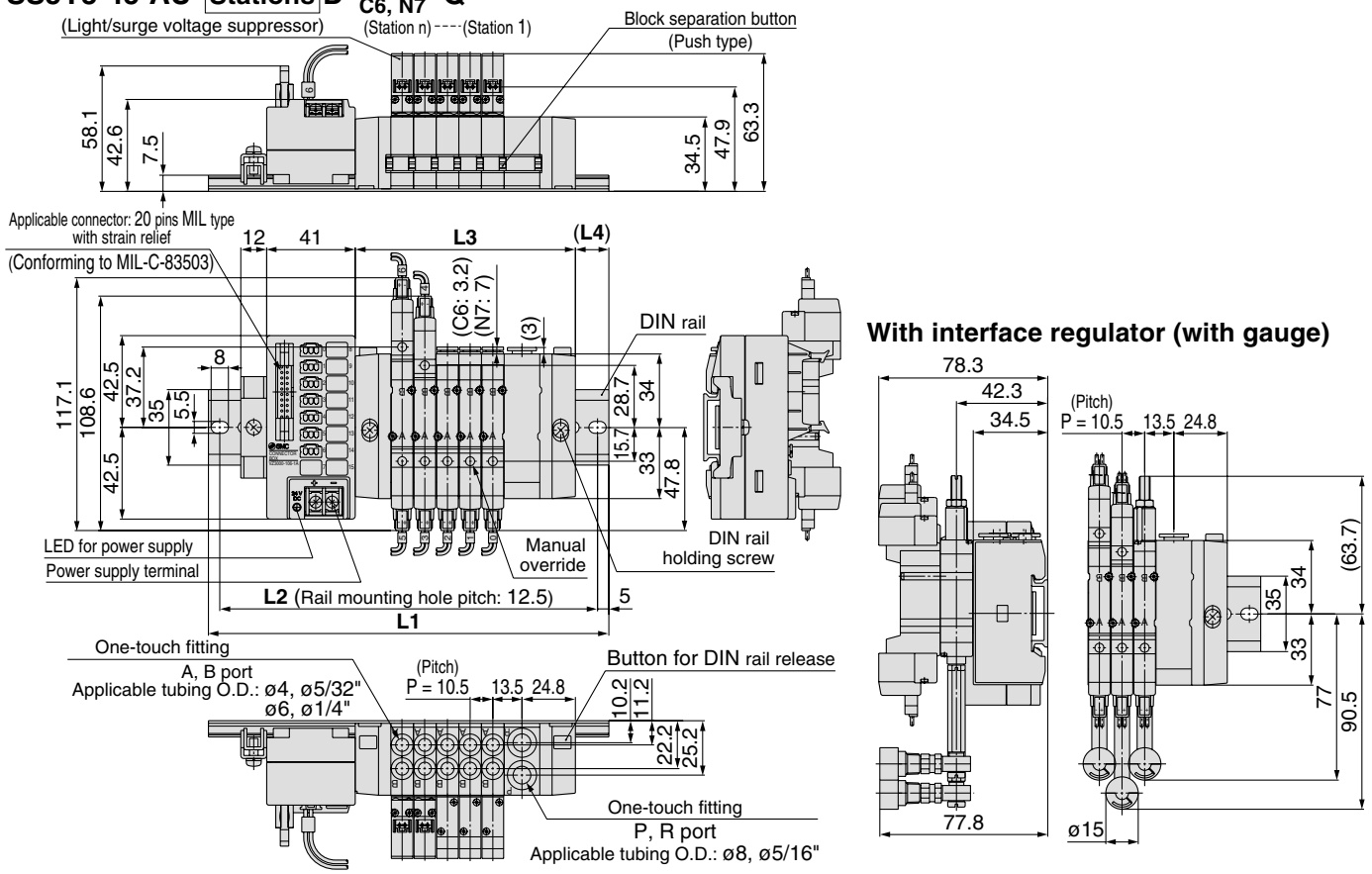

With interface regulator (with gauge)

SS5Y3-45-AD- Stations U- C4, N3 C6, N7 -Q

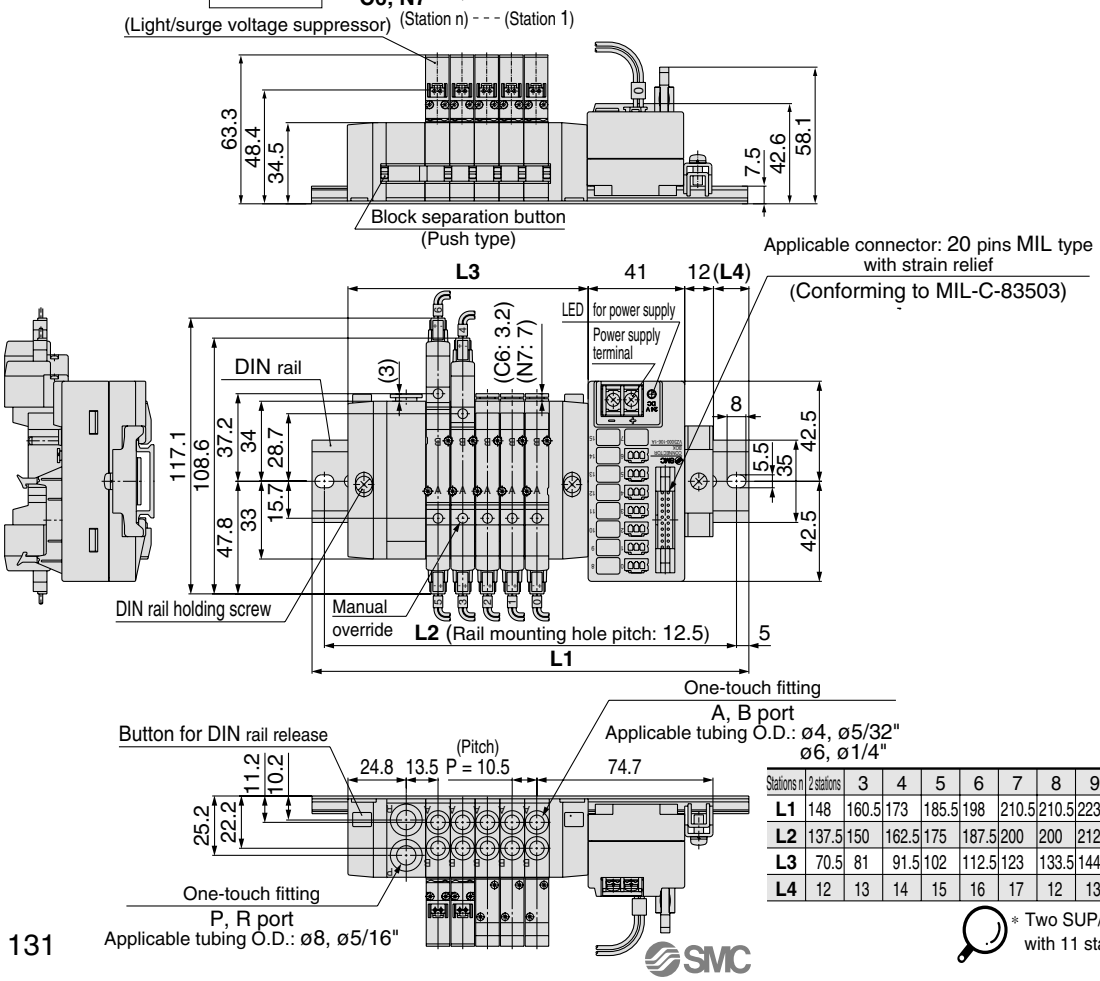

Stations n	2 stations	3	4	5	6	7	8	9	10	11	12	13	14	15	16 stations
L1	148	160.5	173	185.5	198	210.5	210.5	223	235.5	260.5	273	285.5	298	310.5	310.5
L2	137.5	150	162.5	175	187.5	200	200	212.5	225	250	262.5	275	287.5	300	300
L3	70.5	81	91.5	102	112.5	123	133.5	144	154.5	181.5	192	202.5	213	223.5	234
L4	12	13	14	15	16	17	12	13	14	13	14	15	16	17	11.5

∗ Two SUP/EXH blocks are provided for models with 11 stations or more.

SMC

Dimensions: Series SY5000

SS5Y5-45-AU-Stations D-C4, N3 C6, N7 C8, N9

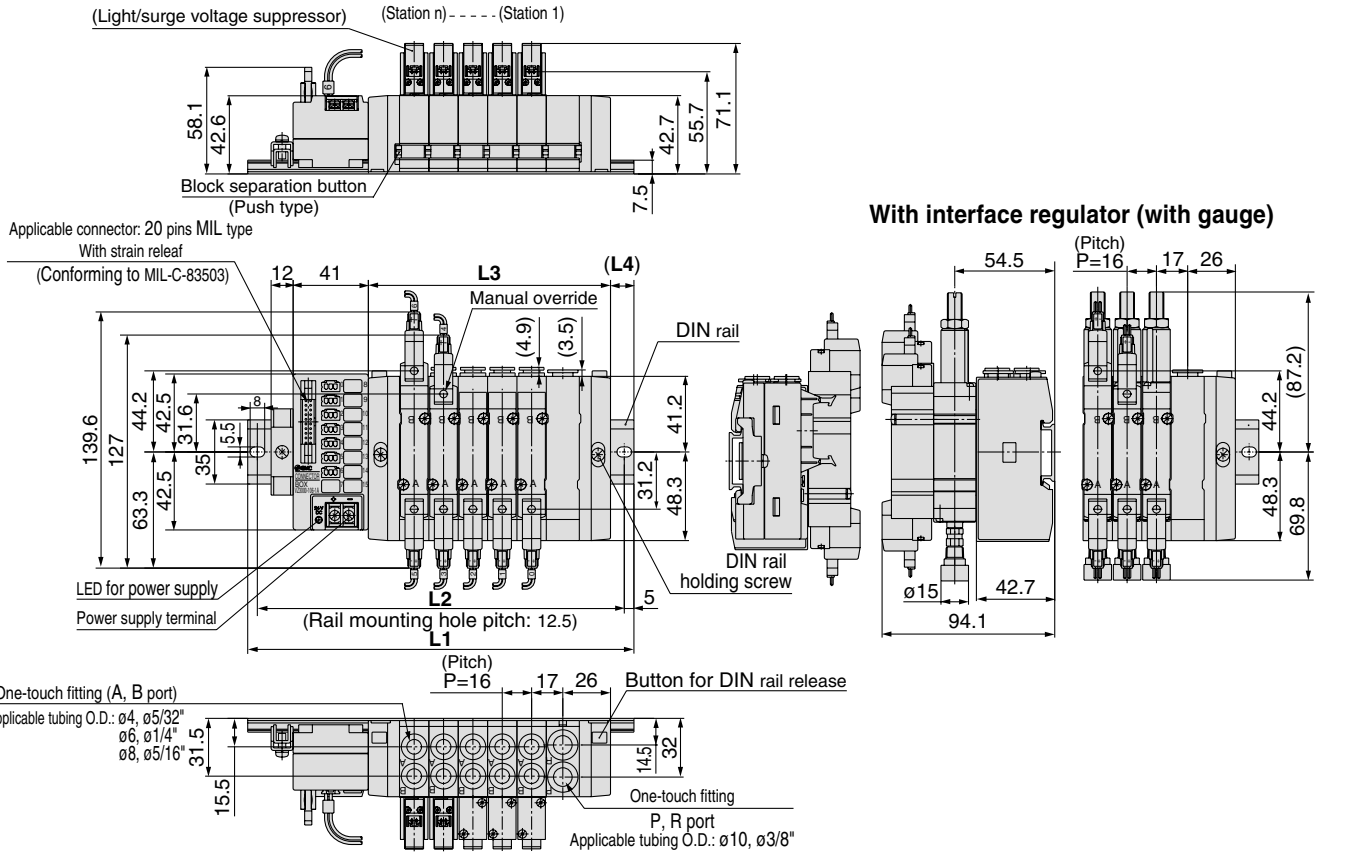

SS5Y5-45-AD-Stations U-C4, N3 C6, N7 C8, N9

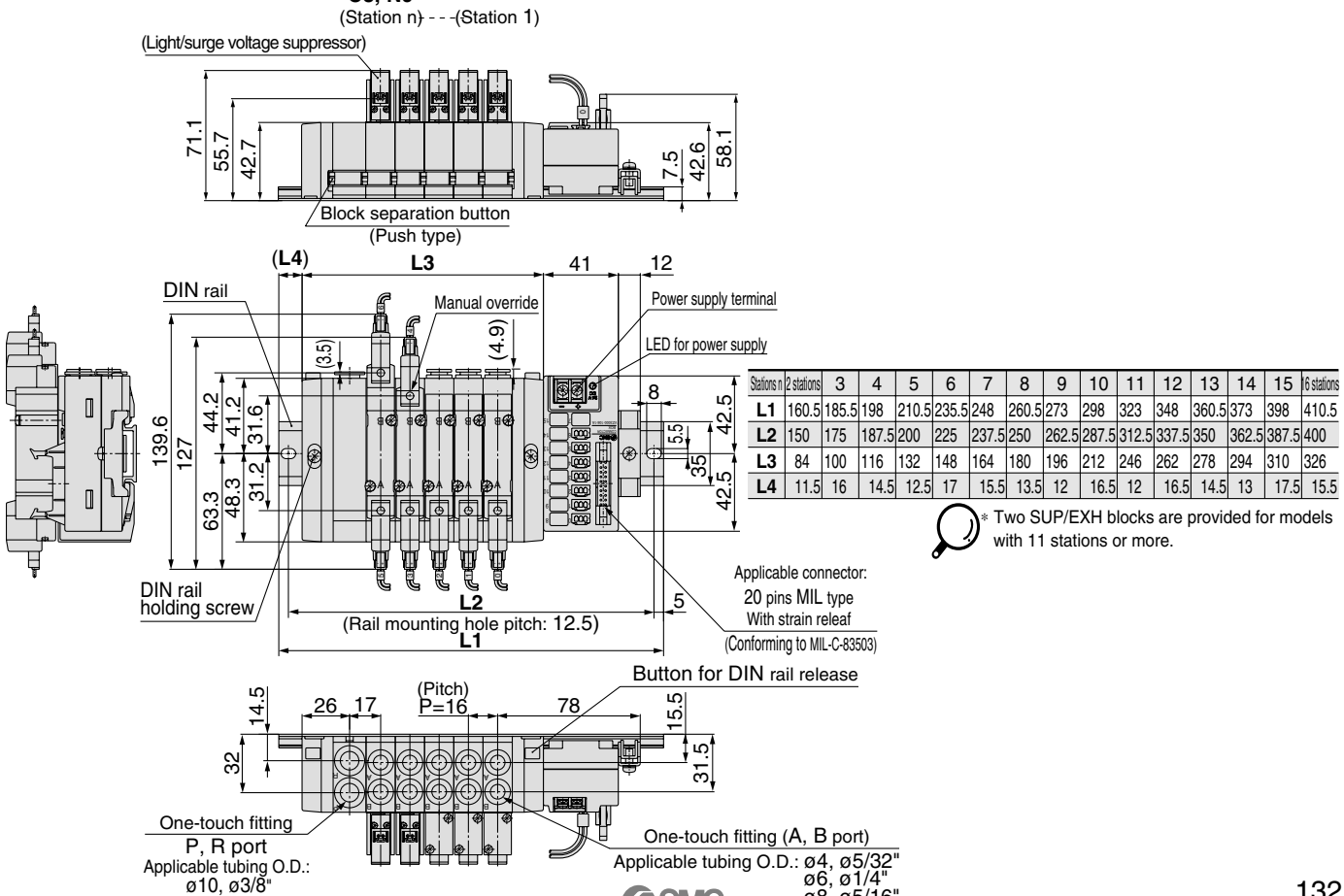

Stations n	2 stations	3	4	5	6	7	8	9	10	11	12	13	14	15	16 stations
L1	160.5	185.5	198	210.5	235.5	248	260.5	273	298	323	348	360.5	373	398	410.5
L2	150	175	187.5	200	225	237.5	250	262.5	287.5	312.5	337.5	350	362.5	387.5	400
L3	84	100	116	132	148	164	180	196	212	246	262	278	294	310	326
L4	11.5	16	14.5	12.5	17	15.5	13.5	12	16.5	12	16.5	14.5	13	17.5	15.5

* Two SUP/EXH blocks are provided for models with 11 stations or more.

DIN Rail Manifold Exploded View

Type 45-A/NA

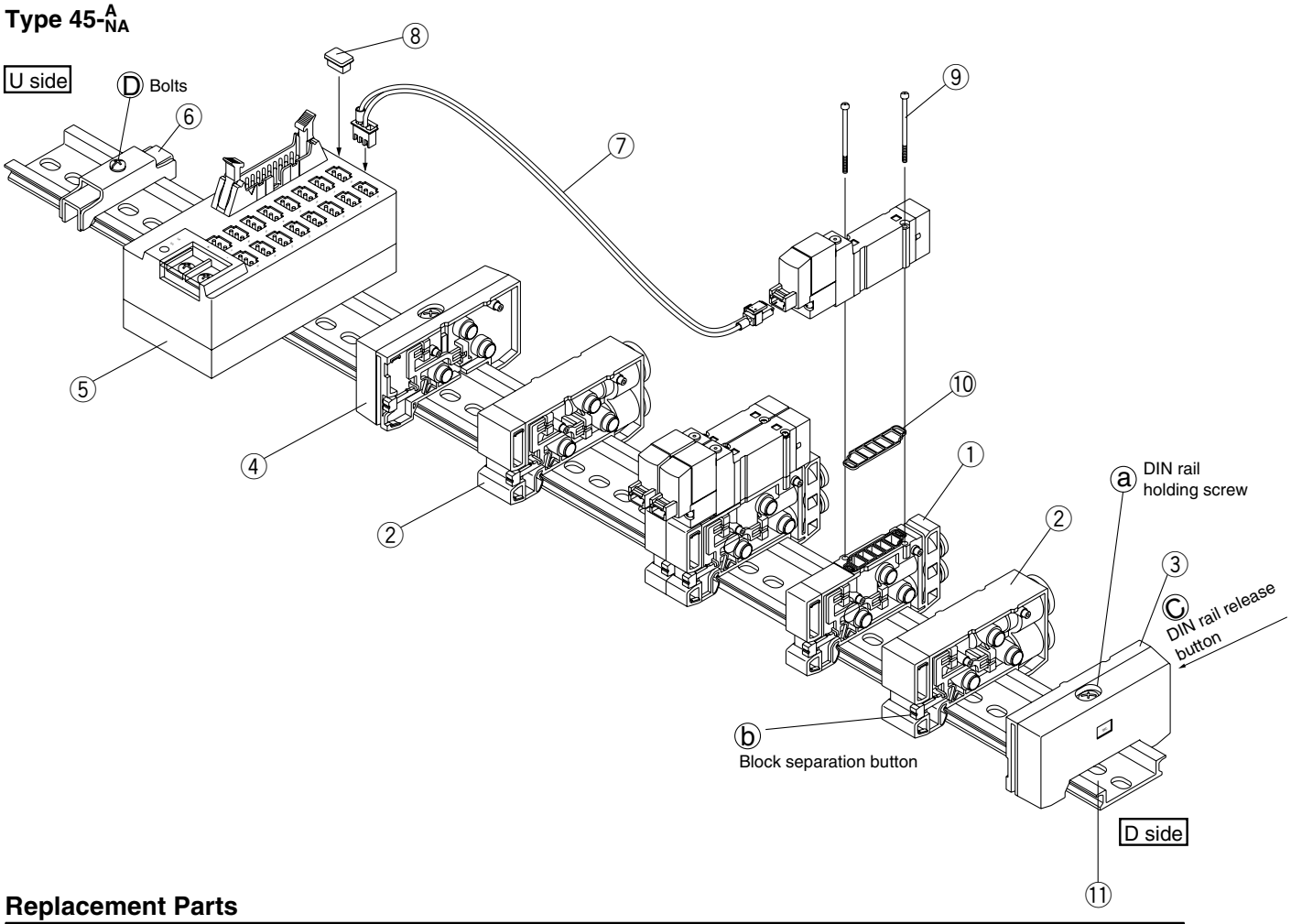

Replacement Parts

No.	Description	No.		Note
		SY3000	**SY5000**	
1	Manifold block assembly	SX3000-50-1A-□□-Q	SX5000-50-1A-□□-Q	•SY3000 (Metric size) (Inch size) C4: With one-touch fitting for ø4 N3: With one-touch fitting for ø5/32" C6: With one-touch fitting for ø6 N7: With one-touch fitting for ø1/4" For SY5000 (Metric size) (Inch size) C4: With one-touch fitting for ø4 N3: With one-touch fitting for ø5/32" C6: With one-touch fitting for ø6 N7: With one-touch fitting for ø1/4" C8: With one-touch fitting for ø8 N9: With one-touch fitting for ø5/16" (Gasket 10 is supplied as an accessory.)
2	SUP/EXH block assembly	(Metric size) SX3000-51-1A (Inch size) SX3000-51-15A	(Metric size) SX5000-51-1A (Inch size) SX5000-51-15A	P, R port SY3000 (Metric size) With one-touch fitting for ø8 (Inch size) With one-touch fitting for ø5/16" P, R port SY5000 (Metric size) With one-touch fitting for ø10 (Inch size) With one-touch fitting for ø3/8"
3	End block assembly R	SX3000-52-1A-Q	SX5000-52-1A-Q	For D side
4	End block assembly L	SX3000-53-1A-Q	SX5000-53-1A-Q	For U side
5	Connector box	VZ3000-106-1A		For 24 VDC only
6	Rail stopper	TXE1-SMC		Made by Kasuga Electric Works
7	Connecter assembly	SY3000-43-1A-□	SY3000-43-2A-□	+COM Type D, 2 to 8 stations Type U, 9 to 16 stations
		SY3000-43-2A-□	SY3000-43-3A-□	+COM Type D, 9 to 16 stations Type U, 2 to 8 stations
		SY3000-43-1NA-□	SY3000-43-2NA-□	–COM Type D, 2 to 8 stations Type U, 9 to 16 stations
		SY3000-43-2NA-□	SY3000-43-3NA-□	–COM Type D, 9 to 16 stations Type U, 2 to 8 stations
8	Dust cap	VZ3000-63-2		
9	Round head combination screw	SY3000-23-4	M3 x 26, Matt nickel plated	
10	Gasket	SX3000-57-4	SX5000-57-6	
11	DIN rail	VZ1000-11-1-□		Refer to page 118.

How to Increase Manifold Bases

Station expansion is possible at any position.

1. Loosen DIN rail holding screw ⓐ fixing the manifold base until it begins to turn idly. (While pressing DIN rail releasing buttons ⓒ, at two locations, separate the manifold base from the DIN rail.)
2. Press manifold block assembly dividing button ⓑ, that are at the location where manifold bases are to be added, until button ⓑ locks, and then separate the block assemblies.
3. Mount additional manifold block assembly on the DIN rail as shown in the figure 1.
4. Press the block assemblies until a click sound is produced, and tighten the DIN rail holding screw ⓐ to fix them to the DIN rail.
   ⚠**Caution** (Tightening torque: 1.4 N·m)
   (While lightly holding the blocks after fixing an end block on one side, tighten the other end block for for better sealing.)
5. Untighten the rail stopper bolt ⓓ to demount the connector box from the DIN rail, and when remounting it, tighten the bolt while pressing it against the rail.

⚠Caution

Note 1) When there are 10 or fewer manifold block assemblies, and more are added to make a total of 11 or more, a supply/exhaust block assembly must also be added.

Note 2) When disassembly and assembly are performed, air leakage may result if connections between blocks and tightening of the end block's holding screw, is inadequate. Before supplying air, confirm that there are no gaps, etc. between blocks, and that manifold blocks are securely fastened to the DIN rail. Then supply air and confirm that there is no air leakage before operating.

Note 3) One connector assembly is necessary for one solenoid.
When a number is necessary for the connector assembly mark tube, suffix the number to the part no. (0 to 15 are provided as mark tube numbers.)
Ex) +COM spec.: D type for 2 to 8 stations: No. 10
SY3000-43-1A-10

Fig. (1) Block mounting procedure

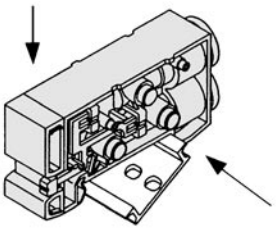

Hook the DIN rail here and press down in the direction of the arrow until a click sound is heard.

How to Change Fitting Assembly

Type 45 manifold permits change in the A and B port sizes by changing the manifold block fitting assembly.
After removing the valve, remove the clip with a screwdriver, etc. For mounting a new fitting assembly, insert it and then insert a clip until it will not come out of the manifold block.

Fitting Assembly Part No.

Metric size

SY3000	One-touch fitting for ø4	VVQ1000-50A-C4
	One-touch fitting for ø6	VVQ1000-50A-C6
SY5000	One-touch fitting for ø4	VVQ1000-51A-C4
	One-touch fitting for ø6	VVQ1000-51A-C6
	One-touch fitting for ø8	VVQ1000-51A-C8

Inch size

SY3000	One-touch fitting for ø5/32"	VVQ1000-50A-N3
	One-touch fitting for ø1/4"	VVQ1000-50A-N7
SY5000	One-touch fitting for ø5/32"	VVQ1000-51A-N3
	One-touch fitting for ø1/4"	VVQ1000-51A-N7
	One-touch fitting for ø5/16"	VVQ1000-51A-N9

Note 1) P and R ports cannot be changed.
Note 2) Use caution that O-rings must be free from scratches and dust. Otherwise, air leakage may result.

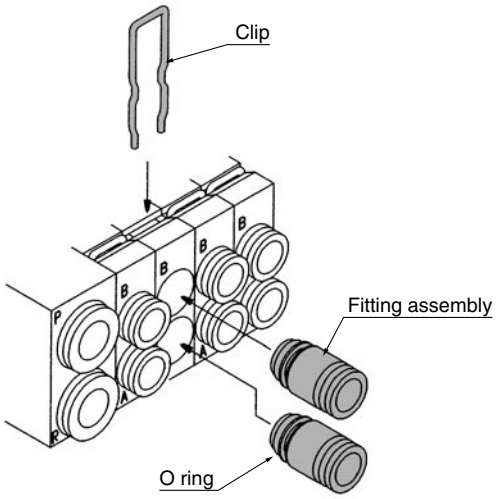

Type 45□

5 Port Solenoid Valve
Series SY3000/5000
Base Mounted
Stacking Type/DIN Rail Mounted
Plug-in

How to Order Manifold

Type 45F (D-sub connector, 25 pins)

SS5Y 3 – 45 □ F D – 05 U – C4 □ □ -Q

Series

3	SY3000
5	SY5000

Common specifications

-	Positive common
N	Negative common

Connector mounting position

Symbol	Mounting position
U	U side
D	D side

Valve stations

Symbol	Stations	Note
02	2 stations	Single wining spec. (Applicable up to 20 solenoid valves.)
⋮	⋮	
20	20 stations	

∗ This also includes the number of blanking plate assemblies.
∗ Two stations are necessary for the double and 3 position solenoid valves (Dual body type).

SUP/EXH block assembly mounting position

Symbol	Mounting position	Stations
U	U side	2 to 10 stations
D	D side	2 to 10 stations
B	(Both sides)	2 to 20 stations
M	Special specifications	

∗ For special specifications, indicate separately by the manifold specification

A, B port size

One-touch fitting (Metric size)

Symbol	Port size	Applicable series
C4	One-touch fitting for ø4	SY3000
C6	One-touch fitting for ø6	
M	Mixed	
C4	One-touch fitting for ø4	SY5000
C6	One-touch fitting for ø6	
C8	One-touch fitting for ø8	
M	Mixed	

One-touch fitting (Inch size)

Symbol	Port size	Applicable series
N3	One-touch fitting for ø5/32"	SY3000
N7	One-touch fitting for ø1/4"	
M	Mixed	
N3	One-touch fitting for ø5/32"	SY5000
N7	One-touch fitting for ø1/4"	
N9	One-touch fitting for ø5/16"	
M	Mixed	

∗ In the case of mixed specifications (M), indicate separately on the manifold specification sheet.

Voltage

-	24 VDC
12V	12 VDC

Option

When a longer DIN rail is desired than the specified stations, specify the station number to be required. (20 stations at maximum)

For external pilot specifications and built-in silencer, refer to page 208.

How to Order Valve Manifold Assembly (Example)

Example (Type 45F/D-sub connector (25 pin))

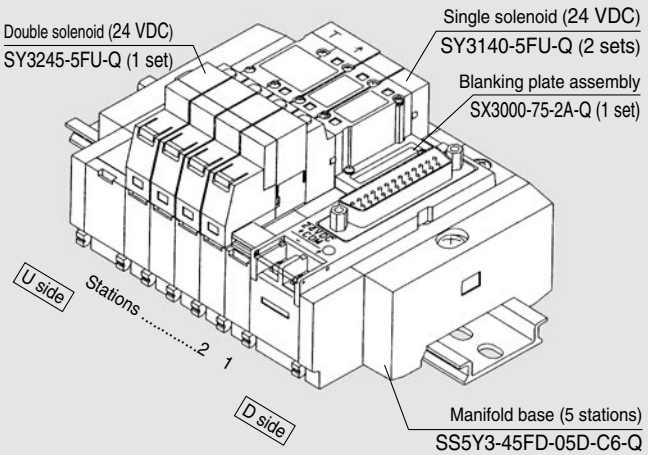

SS5Y3-45FD-05U-C6-Q **1 set** (Type 45F, D-sub connector 5 port manifold base part no.)
∗ **SX3000-75-2A-Q** **1 set (Blanking plate assembly part no)**
∗ **SY3140-5FU-Q** **2 sets (Single solenoid part no.)**
∗ **SY3245-5FU-Q** **1 set (Double solenoid part no.)**

→ The asterisk denotes the symbol for assembly. Prefix it to the part nos. of the solenoid valve, etc.

- The valve arrangement is numbered as the 1st. station from D side regardless of the mounting position of connector box.
- When ordering double solenoid valves/3 position (Dual body type), please keep in mind that they require two manifold stations.

How to Order Valve (Type 45F, 45P□, 45T, 45T1)

2 position single SY 3 1 4 0 – 5 FU □ -Q

Double and 3 position SY 3 2 4 5 – 5 FU □ -Q

Series

3	SY3000
5	SY5000

Type of actuation

2	2 position double
3	3 position closed center
4	3 position exhaust center
5	3 position pressure center

Dual body type (Double, 3 position)

Rated voltage

5	24 VDC
6	12 VDC

Manual override

-	Non-locking push type
D	Push-turn locking slotted type
E	Push-turn locking lever type

How to Order Manifold

Type 45P□ (Flat ribbon cable)

SS5Y 3 – 45 □ P □ D – 05 U – C4 – □ □ -Q

Option
When a longer DIN rail is desired than the specified stations, specify the station number to be required. (20 stations at maximum)

Series

3	SY3000
5	SY5000

Common specifications

-	Positive common
N	Negative common

Connector poles

Symbol	Poles	Stations
-	26	2 to 20 stations
G	20	2 to 16 stations
H	10	2 to 8 stations

Connector mounting position

Symbol	Mounting position
U	U side
D	D side

A, B port size

One-touch fitting (Metric size)

Symbol	Port size	Applicable series
C4	One-touch fitting for ø4	SY3000
C6	One-touch fitting for ø6	
M	Mixed	
C4	One-touch fitting for ø4	SY5000
C6	One-touch fitting for ø6	
C8	One-touch fitting for ø8	
M	Mixed	

One-touch fitting (Inch size)

Symbol	Port size	Applicable series
N3	One-touch fitting for ø5/32"	SY3000
N7	One-touch fitting for ø1/4"	
M	Mixed	
N3	One-touch fitting for ø5/32"	SY5000
N7	One-touch fitting for ø1/4"	
N9	One-touch fitting for ø5/16"	
M	Mixed	

∗ In the case of mixed specifications, indicate separately on the manifold specification sheet.

SUP/EXH block assembly mounting position

Symbol	Mounting position	Stations
U	U side	2 to 10 stations
D	D side	2 to 10 stations
B	Both sides	2 to 20 stations
M	Special specifications	

∗ For special specifications, indicate separately by the manifold specification sheet.

Valve stations (Blanking plate assemblies are included.)

26 pins (P) connector

Symbol	Stations	Note
02	2 stations	Single wiring spec. (Applicable up to 20 solenoid valves.)
⋮	⋮	
20	20 stations	

20 pins (PG) connector

Symbol	Stations	Note
02	2 stations	Single wiring spec. (Applicable up to 16 solenoid valves.)
⋮	⋮	
16	16 stations	

10 pins (PH) connector

Symbol	Stations	Note
02	2 stations	Single wiring spec. (Applicable up to 8 solenoid valves)
⋮	⋮	
08	8 stations	

• Two stations are necessary for the double, 3 position (Dual body type).

Type 45T (9 pins terminal block)

SS5Y 3 – 45T D – 05 U – C4 – □ -Q

Option
When a longer DIN rail is desired than the specified stations, specify the station number to be required.

Series

3	SY3000
5	SY5000

Terminal block mounting position

Symbol	Mounting position
U	U side
D	D side

Valve stations

Symbol	Stations	Note
02	2 stations	Single wiring spec. (Applicable up to 8 solenoid valves)
⋮	⋮	
08	8 stations	

∗ This also includes the number of blanking plate assemblies.
∗ Two stations are necessary for the double, 3 position (Dual body type).

SUP/EXH block assembly mounting position

Symbol	Mounting position	Stations
U	U side	2 to 8 stations
D	D side	2 to 8 stations
B	Both sides	2 to 8 stations
M	Special specifications	

∗ For special specifications, indicate separately by the manifold specification sheet.

A, B port size

One-touch fitting (Metric size)

Symbol	Port size	Applicable series
C4	One-touch fitting for ø4	SY3000
C6	One-touch fitting for ø6	
M	Mixed	
C4	One-touch fitting for ø4	SY5000
C6	One-touch fitting for ø6	
C8	One-touch fitting for ø8	
M	Mixed	

One-touch fitting (Inch size)

Symbol	Port size	Applicable series
N3	One-touch fitting for ø5/32"	SY3000
N7	One-touch fitting for ø1/4"	
M	Mixed	
N3	One-touch fitting for ø5/32"	SY5000
N7	One-touch fitting for ø1/4"	
N9	One-touch fitting for ø5/16"	
M	Mixed	

∗ In the case of mixed specifications (M), indicate separately on the manifold

Type 45T1 (18 pins terminal block)

SS5Y 3 – 45T1 D – 15 B – C4 – □ -Q

Option
When a longer DIN rail is desired than the specified stations, specify the station number to be required.

Series

3	SY3000
5	SY5000

Terminal block mounting position

Symbol	Mounting position
U	U side
D	D side

Valve stations

Symbol	Stations	Note
02	2 stations	Single wining spec. (Applicable up to 17 solenoid valves.)
⋮	⋮	
17	17 stations	

∗ This also includes the number of blanking plate assemblies.
∗ Two stations are necessary for the double, 3 position (Dual body type).

SUP/EXH block assembly mounting position

Symbol	Mounting position	Stations
U	U side	2 to 10 stations
D	D side	2 to 10 stations
B	Both sides	2 to 17 stations
M	Special specifications	

∗ For special specifications, indicate separately by the manifold specification sheet.

A, B port size

One-touch fitting (Metric size)

Symbol	Port size	Applicable series
C4	One-touch fitting for ø4	SY3000
C6	One-touch fitting for ø6	
M	Mixed	
C4	One-touch fitting for ø4	SY5000
C6	One-touch fitting for ø6	
C8	One-touch fitting for ø8	
M	Mixed	

One-touch fitting (Inch size)

Symbol	Port size	Applicable series
N3	One-touch fitting for ø5/32"	SY3000
N7	One-touch fitting for ø1/4"	
M	Mixed	
N3	One-touch fitting for ø5/32"	SY5000
N7	One-touch fitting for ø1/4"	
N9	One-touch fitting for ø5/16"	
M	Mixed	

∗ In the case of mixed specifications (M), indicate separately on the manifold

Note) The terminal block (45T□) manifold has no common polarity. It can be used for both positive and negative common.

How to Order Manifold

Type 45G (Flat cable, PC Wiring System compatible)

SS5Y 3 – 45G D – 05 U □ – C4 – □ -Q

Series

3	SY3000
5	SY5000

Connector mounting position

Symbol	Mounting position
U	U side
D	D side

Valve stations

Symbol	Stations	Note
02	2 stations	Single wining spec. (Applicable up to 16 solenoid valves.)
⋮	⋮	
16	16 stations	

∗ Two stations are necessary for the double, 3 position (Dual body type).
∗ This also includes the number of blanking plate assemblies.

SUP/EXH block assembly mounting position

Symbol	Mounting position	Stations
U	U side	2 to 10 stations
D	D side	2 to 10 stations
B	Both sides	2 to 16 stations
M	Special specifications	

∗ For special specifications, indicate separately by the manifold specification sheet.

A, B port size

One-touch fitting (Metric size)

Symbol	Port size	Applicable series
C4	One-touch fitting for ø4	SY3000
C6	One-touch fitting for ø6	
M	Mixed	
C4	One-touch fitting for ø4	SY5000
C6	One-touch fitting for ø6	
C8	One-touch fitting for ø8	
M	Mixed	

One-touch fitting (Inch size)

Symbol	Port size	Applicable series
N3	One-touch fitting for ø5/32"	SY3000
N7	One-touch fitting for ø1/4"	
M	Mixed	
N3	One-touch fitting for ø5/32"	SY5000
N7	One-touch fitting for ø1/4"	
N9	One-touch fitting for ø5/16"	
M	Mixed	

∗ In the case of mixed specifications, indicate separately on the manifold specification sheet.

SUP/EXH block assembly specifications

Symbol	Specifications
-	Internal pilot specifications
R	External pilot specifications
S	Internal pilot / Built-in silencer
RS	External pilot / Built-in silencer

Option

When a longer DIN rail is desired than the specified stations, specify the station number to be required. (20 stations at maximum)

How to Order Valve

2 position single **SY 3 1 4 0 □ – 5 FU □ -Q**

Double, 3 position **SY 3 2 4 5 □ – 5 FU □ -Q**

Series

3	SY3000
5	SY5000

Type of actuation

2	2 position double
3	3 position closed center
4	3 position exhaust center
5	3 position pressure center

Dual body type (Double, 3 position)

Pilot type

-	Inernal pilot
R	External pilot

Rated voltage

5	24 VDC

Manual override

-	Non-locking push type
D	Push-turn locking slotted type
E	Push-turn locking lever type

Manifold Option

■ **Individual EXP spacer assembly**

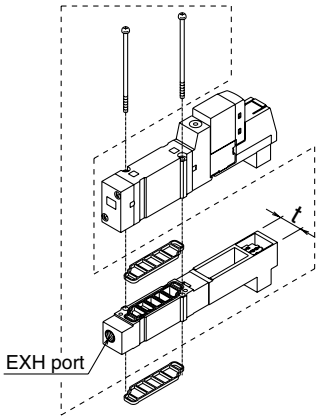

Series	Assembly part no.	Port no.	t
SY3000	SY3000-39-3A	M5	11
SY5000	SY5000-39-17*A-Q	1/8	15

Note) Please be careful because the dual body type (double solenoid, 3-position) requires two pieces. In this case, the exhaust is performed in the direction of the arrow mark indicated on the valve surface.

■ **Individual SUP spacer assembly**

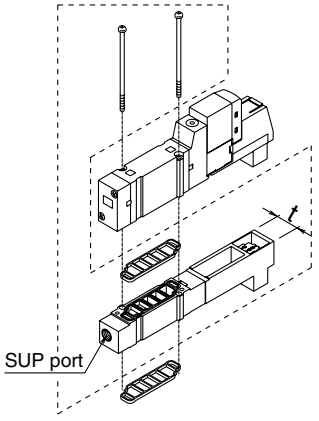

Series	Assembly part no.	Port no.	t
SY3000	SY3000-38-3A	M5	11
SY5000	SY5000-38-17*A-Q	1/8	15

Note) Please be careful because the dual body type (double solenoid, 3-position) requires two pieces. In this case, both supply ports require the piping.

∗ **Thread type**

-	Rc
F	G
N	NPT
T	NPTF

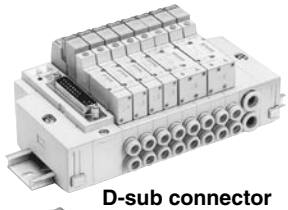

D-sub connector

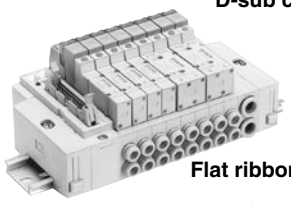

Flat ribbon cable

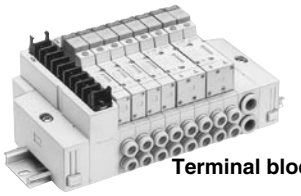

Terminal block

Manifold Specifications

Model			D-sub connector	Flat ribbon cable Type 45P□			Terminal block		Flat ribbon cable PC wiring system compatible
			Type 45F	Type 45P	Type 45PG	Type 45PH	Type 45T	Type 45T1	Type 45G
Manifold			Plug-in						
P (SUP)/R (EXH)			Common SUP, Common EXH						
Valve stations Note 1, 2)			2 to 20 stations		2 to 16 stations	2 to 8 stations		2 to 17 stations	2 to 16 stations
A, B port Porting specifications		Location	Base						
		Direction	Side						
Port size	P, R port	SY3000	C8 (One-touch fitting for ø8)						
		SY5000	C10 (One-touch fitting for ø10)						
	A, B port	SY3000	C4 (One-touch fitting for ø4)/C6 (One-touch fitting for ø6)						
		SY5000	C4 (One-touch fitting for ø4)/C6 (One-touch fitting for ø6)/C8 (One-touch fitting for ø8)						
Applicable connector			D-sub connector Complies with MIL-C-24308 JIS-X-5101	Flat ribbon cable connector Socket: 26 pins MIL type with strain relief Conforming to MIL-C-83503	Flat ribbon cable connector Socket: 20 pins MIL type with strain relief Conforming to MIL-C-83503	Flat ribbon cable connector Socket: 10 pins MIL type with strain relief Conforming to MIL-C-83503	Terminal block (M3) 9 pins	Terminal block (M3) 18 pins	Flat ribbon cable connector Socket: 20 pins MIL type with strain relief Conforming to MIL-C-83503
Internal wiring			+COM (Type 45□), –COM (Type 45N□)				In common between +COM and –COM.		+ COM
Manifold base weight w (g) n: Stations (D-sub connector)		SY3000	2 to 10 stations: W = 26n + 172 11 to 20 stations: W = 26n + 199						
		SY5000	2 to 10 stations: W = 54n + 227 11 to 20 stations: W = 52n + 264						

Note 1) For more than 11 stations, supply pressure to P port on both sides and exhaust from R port on both sides.
Note 2) There is a limit depending on the number of solenoids. Refer to "How to Order".

Flow Characteristics

Model	Port size		Flow characteristics							
	1 ,5 ,3 (P ,EA ,EB)	4 ,2 (A ,B)	1 → 4/2 (P → A/B)				4/2 → 5/3 (A/B → EA/EB)			
			C (dm³/(s·bar))	b	Cv	Q[ℓ/min(ANR)]*	C (dm³/(s·bar))	b	Cv	Q[ℓ/min(ANR)]*
SS5Y3-45□	C8	C6	0.88	0.21	0.22	212	0.95	0.18	0.22	225
SS5Y5-45□	C10	C8	2.2	0.24	0.53	539	2.5	0.18	0.58	592

Note) The value is for manifold base with 5 stations and individually operated 2 position type.
* These values have been calculated according to ISO6358 and represent the flow rate measured in standard conditions at an upstream pressure of 0.6 MPa (relative pressure) and a differential pressure of 0.1MPa.

Manifold Option

▪ Blanking plate assembly

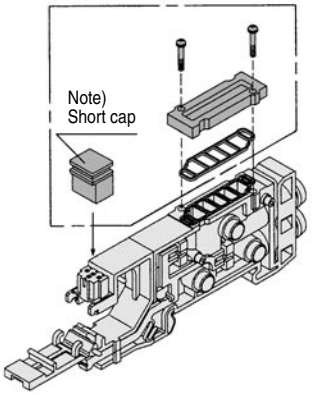

Series	Assembly part no.
SY3000	SX3000-75-2A-Q
SY5000	SX5000-76-2A-Q

Note) • When mounting blanking plate, be sure to mount a short cap.
• Two stations are necessary for the double, 3 position (Dual body type).

▪ SUP blocking disk

By installing a SUP blocking disk in the pressure supply passage of a manifold valve, it is possible to supply two or more different high and low pressures to one manifold.



Series	No.
SY3000	SX3000-77-1A
SY5000	SX5000-77-1A

▪ EXH blocking disk

By installing an EXH blocking disk in the exhaust passage of a manifold valve, it is possible to divide the valve's exhaust so that it does not affect another valve. (Two blocking disks are needed to divide both exhausts.)



Series	No.
SY3000	SX3000-77-1A
SY5000	SX5000-77-1A

▪ Label for block disk

The labels shown below are used on manifold stations containing SUP/EXH block disk(s) to show their location. (3 pcs. each)
VZ3000-123-1A (In common with SY3000, 5000)

Label for SUP block disk Label for EXH block disk Label for SUP/EXH block disk



Note) When a block disk is concurrently ordered by specifying on the manifold specification sheet, etc., a label will be stuck on the position where block disk is mounted.

▪ Silencer with One-touch fi

The silencer plugs directly into the C touch fittings of the manifold.

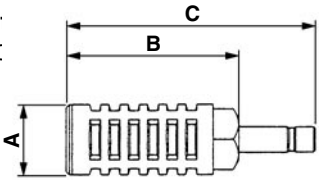

Series	Model	Effective area	A	B	C
For SY3000 (ø8)	AN203-KM8	14 mm²	ø16	26	51
For SY5000 (ø10)	AN200-KM10	26 mm²	ø22	53.8	80.8
	AN300-KM10	30 mm²	ø25	70	97

▪ Plug (white)

These are inserted in unused cylinder ports and SUP, EXH ports. Purchasing order is available in units of 10 pieces.

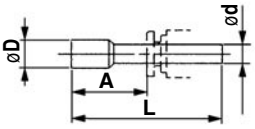

Dimensions

Applicable fittings size ød	Model	A	L	D
4	**KQ2P-04**	16	32	6
6	**KQ2P-06**	18	35	8
8	**KQ2P-08**	20.5	39	10
10	**KQ2P-10**	22	43	12
1/8"	**KQ2P-01**	16	31.5	5
5/32"	**KQ2P-03**	16	32	6
1/4"	**KQ2P-07**	18	35	8.5
5/16"	**KQ2P-09**	20.5	39	10

⚠ Caution

Mounting screw tightening torques

M2: 0.17 N·m
M3: 0.8 N·m
M4: 1.4 N·m

Manifold Option

▪ D-sub connector (25 pins)/Cable assembly

GVVZS3000-21A- 1/2/3/4/5 **-** S/60

(The D-sub connector cable ass'y can be ordered individually or included in a specific manifold model no. Refer to "How to Order Manifold".)

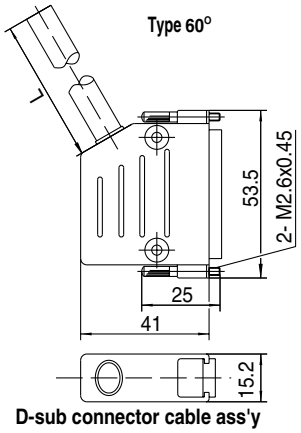

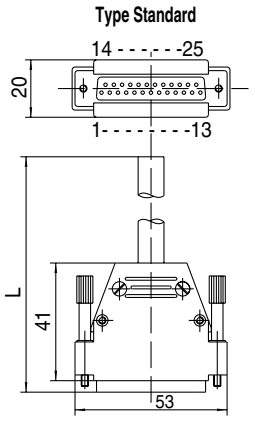

D-sub connector cable ass'y

Cable length (L)	Ass'y No.
1m*	GVVZS3000-21A-1□
3m	GVVZS3000-21A-2□
5m	GVVZS3000-21A-3□
8m	GVVZS3000-21A-4□
20m	GVVZS3000-21A-5S

* Standard type is not available for the cable length of 1m.

Model

Shielded cable	**S**
60° connector	**60**
Standard	**-**

Electric characteristics

Item	Characteristics
Conductor resistance Ω/km, 20°C	57 or less
Voltage limit V, 5min, AC	1500
Insulation resistance MΩ/km	20

Wire color table by terminal number of D-sub connector cable assembly

Terminal No.	Lead wire colour	Dot marking
1	White	–
2	Brown	–
3	Green	–
4	Yellow	–
5	Grey	–
6	Pink	–
7	Blue	–
8	Red	–
9	Black	–
10	Violet	–
11	Grey	Pink
12	Red	Blue
13	White	Green
14	Brown	Green
15	White	Yelow
16	Yelow	Brown
17	White	Grey
18	Grey	Brown
19	White	Pink
20	Pink	Brown
21	White	Blue
22	Brown	Blue
23	White	Red
24	Brown	Red
25	White	Black

∗ Connector made in conformity with DIN47100.

▪ Flat Ribbon Cable Connector/Cable assembly

AXT100-FC□- 1 to 3

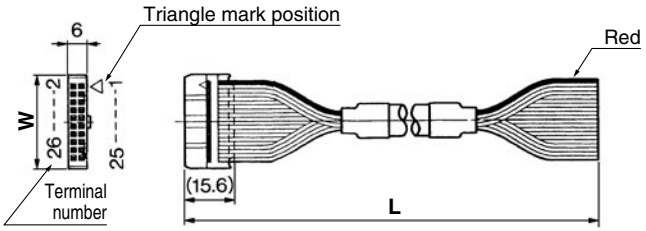

▪ Dimensions/DIN rail

VZ1000-11-1-□

● **Refer to L dimensions**

∗ Fill in □ with an appropriate no. listed on the table of DIN rail dimensions shown below.

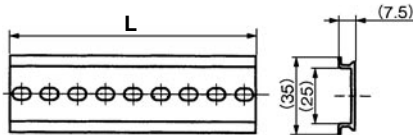

Flat Ribbon Cable Assembly

Cable length (L)	10 pins	20 pins	26 pins
1.5 m	AXT100-FC10-1	AXT100-FC20-1	AXT100-FC26-1
3 m	AXT100-FC10-2	AXT100-FC20-2	AXT100-FC26-2
5 m	AXT100-FC10-3	AXT100-FC20-3	AXT100-FC26-3
Connector width (W)	17.2	30	37.5

∗ For other commercial connectors, use a type with strain relief that conform to MIL-C-83503.

Connector manufacturers' example

- **Hirose Electric Co., Ltd.**
- **Sumitomo 3M Limited**
- **Fujitsu Limited**
- **Japan Aviation Electronics Industry, Ltd.**
- **J.S.T. Mfg. Co., Ltd.**

No.	0	1	2	3	4	5	6	7	8	9	10
L Dimension	98	110.5	123	135.5	148	160.5	173	185.5	198	210.5	223
No.	11	12	13	14	15	16	17	18	19	20	21
L Dimension	235.5	248	260.5	273	285.5	298	310.5	323	335.5	348	360.5
No.	22	23	24	25	26	27	28	29	30	31	32
L Dimension	373	385.5	398	410.5	423	435.5	448	460.5	473	485.5	498
No.	33	34	35	36	37	38	39	40	41	42	43
L Dimension	510.5	523	535.5	548	560.5	573	585.5	598	610.5	623	635.5
No.	44	45	46	47	48	49	50	51	52	53	54
L Dimension	648	660.5	673	685.5	698	710.5	723	735.5	748	760.5	773
No.	55	56	57	58	59	60	61	62	63	64	65
L Dimension	785.5	798	810.5	823	835.5	848	860.5	873	885.5	898	910.5
No.	66	67	68	69	70	71					
L Dimension	923	935.5	948	960.5	973	985.5					

∗ Refer to L1 dimension on pages starting with page 145 for lengths that correspond to the number of manifold stations.

Manifold Internal Wiring

45(N)F/D-sub Connector

A D-sub connector used for electric wiring reduces labor during wiring operation. Connectors conforming to MIL are used for interchangeability.

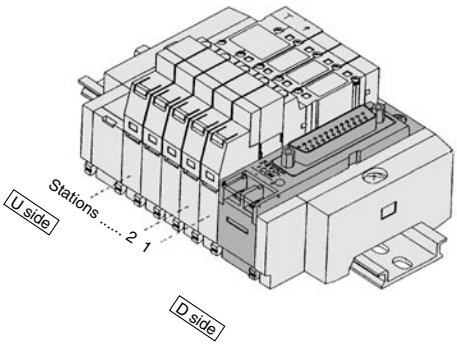

<For positive common (45F)> **<For negative common (45NF)>**

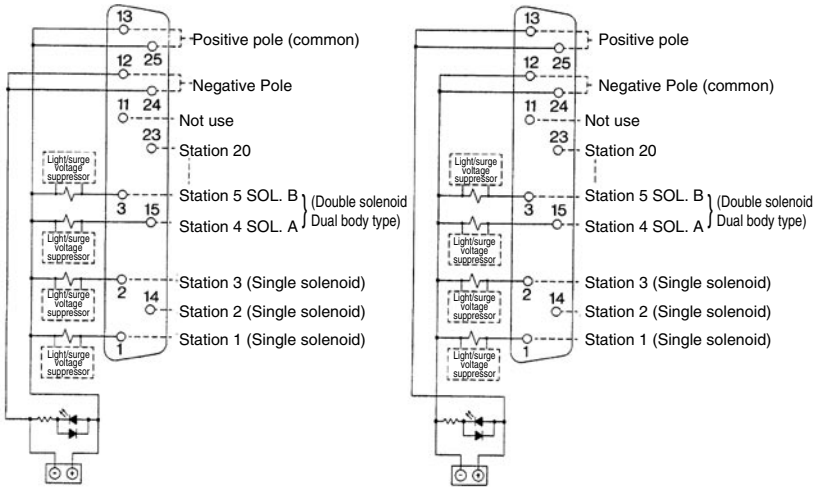

- The power source terminal is used for connecting to an external power source.
- The maximum number of stations that can be accommodated is 20 manifold stations, with up to 20 solenoids.(For more stations, please contact SMC.)
- Regardless of the connector mounting position, stations are to be counted from D side as the 1st one.

Type 45(N)P/Flat Ribbon Cable (26 pins)

A flat cable connector used for electric wiring reduces labor during wiring operation. Connectors conforming to MIL are used for interchangeability.

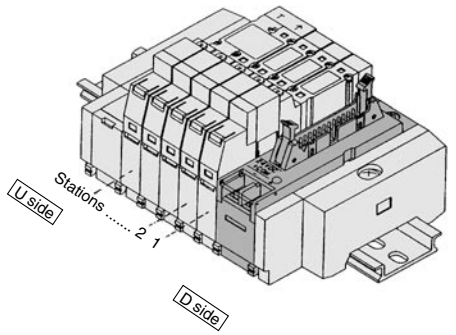

<For positive common (45P)> **<For negative common (45NP)>**

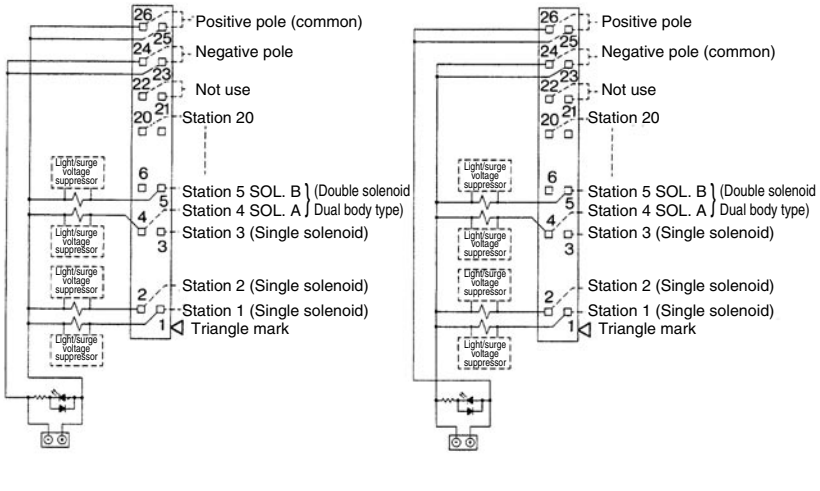

- The power source terminal is used for connecting to an external power source.
- The maximum number of stations that can be accommodated is 20 manifold stations, with up to 20 solenoids. (For more stations, please contact SMC.)
- Regardless of the connector mounting position, stations are to be counted from D side as the 1st one.

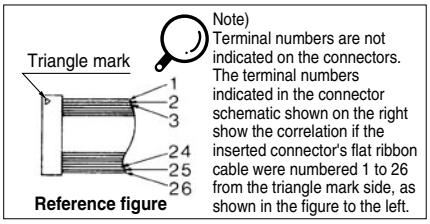

Note)
Terminal numbers are not indicated on the connectors. The terminal numbers indicated in the connector schematic shown on the right show the correlation if the inserted connector's flat ribbon cable were numbered 1 to 26 from the triangle mark side, as shown in the figure to the left.

Manifold Internal Wiring

Type 45(N)PG/Flat Ribbon Cable (20 pins)

A flat cable connector used for electric wiring reduces labor during wiring operation. Connectors conforming to MIL are used for interchangeability.

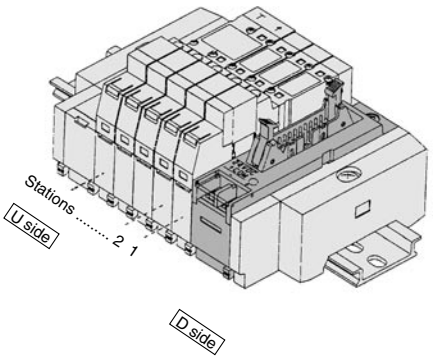

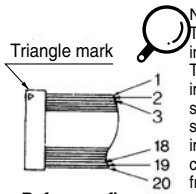

Reference figure

Note)
Terminal numbers are not indicated on the connectors. The terminal numbers indicated in the connector schematic shown on the right show the correlation if the inserted connector's flat ribbon cable were numbered 1 to 26 from the triangle mark side, as shown in the figure to the left.

<For positive common (45PG)> **<For negative common (45NPG)>**

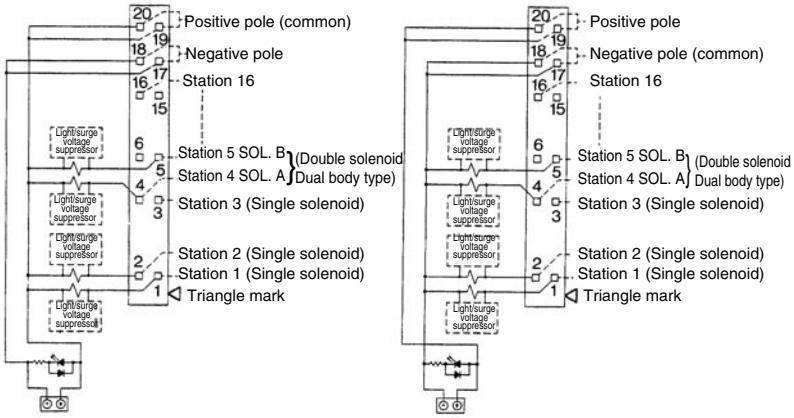

- The power source terminal is used for connecting to an external power source.
- The maximum number of stations that can be accommodated is 16 manifold stations, with up to 16 solenoids. (For more stations, please contact SMC.)
- Regardless of the connector mounting position, stations are to be counted from D side as the 1st one.

Type 45(N)PH/Flat Ribbon Cable (10 pins)

A flat cable connector used for electric wiring reduces labor during wiring operation. Connectors conforming to MIL are used for interchangeability.

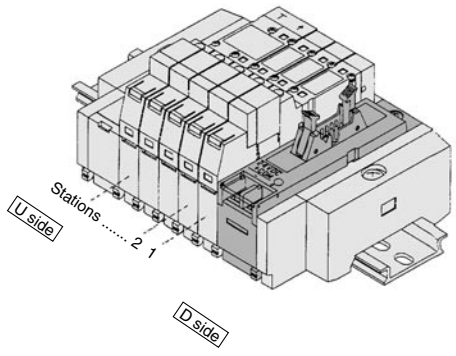

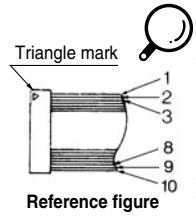

Reference figure

Note)
Terminal numbers are not indicated on the connectors. The terminal numbers indicated in the connector schematic shown on the right show the correlation if the inserted connector's flat ribbon cable were numbered 1 to 26 from the triangle mark side, as shown in the figure to the left.

<For positive common (45PH)> **<For negative common (45NPH)>**

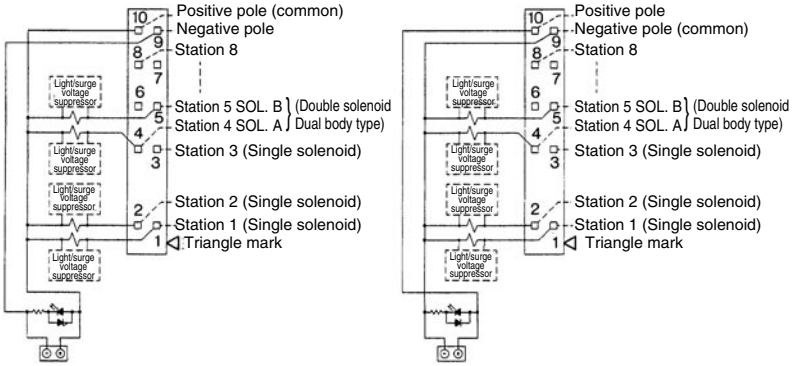

- The power source terminal is used for connecting to an external power source.
- The maximum number of stations that can be accommodated is 8 manifold stations, with up to 8 solenoids. (For more stations, please contact SMC.)
- Regardless of the connector mounting position, stations are to be counted from D side as the 1st one.

Manifold Internal Wiring

Type 45T/Terminal Block

A terminal block style permits direct cable connection without treatment of lead wires.

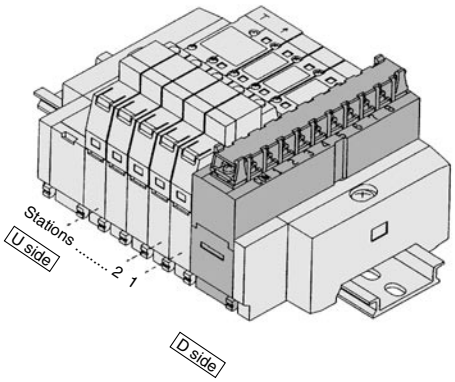

(45T)

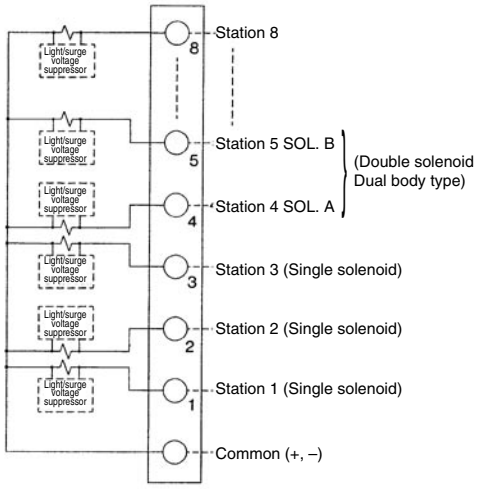

- The maximum number of stations that can be accommodated is 8 manifold stations, with up to 8 solenoids. (For more stations, please contact SMC.)
- Regardless of the connector mounting position, stations are to be counted from D side as the 1st one.
- There is no polarity in the COM wiring. Supply positive power for +COM spec. and negative power for –COM spec.

Type 45T1/Terminal Block

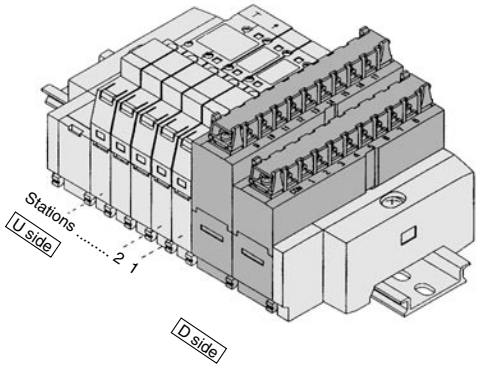

(45T1)

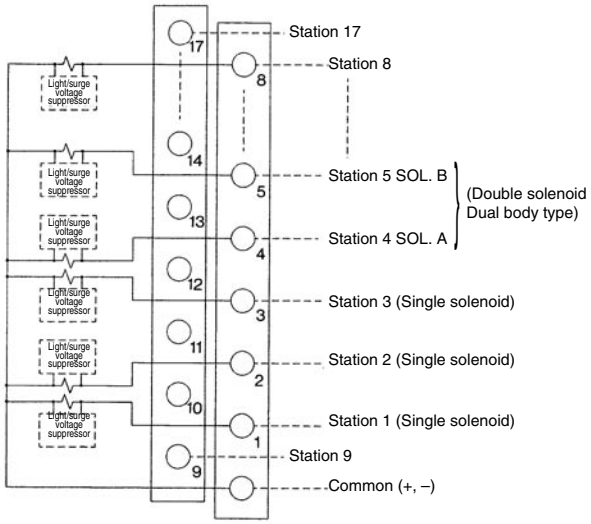

- The maximum number of stations that can be accommodated is 17 manifold stations, with up to 17 solenoids. (For more stations, please contact SMC.)
- Regardless of the connector mounting position, stations are to be counted from D side as the 1st one.
- There is no polarity in the COM wiring. Supply positive power for +COM spec. and negative power for –COM spec.

Manifold Internal Wiring

Type 45G Flat Ribbon Cable (PC Wiring System compatible)

It's the manifold for 20 pins flat ribbon cable connector which is compliant for PC wiring system.

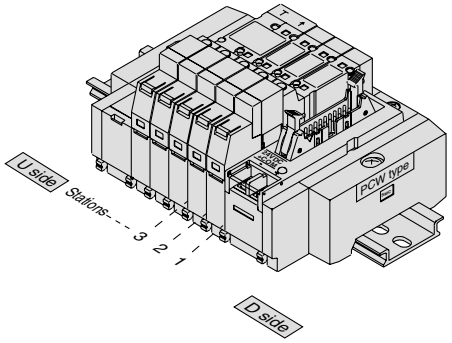

Electric circuit diagram
(Below wiring is the case of all double solenoid connections.)

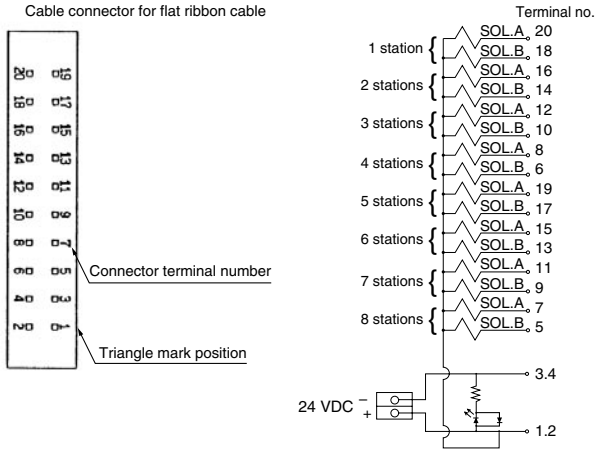

- The maximum number of stations that can be accommodated is 16 manifold stations, with up to 16 solenoids. (For more stations, please contact SMC.)
- Regardless of the connector mounting position, stations are to be counted from D side as the 1st one.

(For details about the PC wiring system, refer to catalogue CAT.ES02-20 separately.)

How to Connect SS5Y□-45□ (Plug-in)

Power terminal is equipped with plug-in manifold of Series SY as standard.
Power terminal enables the power supply to valve from either of manifold or controller side.

1. Wiring example when using manifold power supply terminals

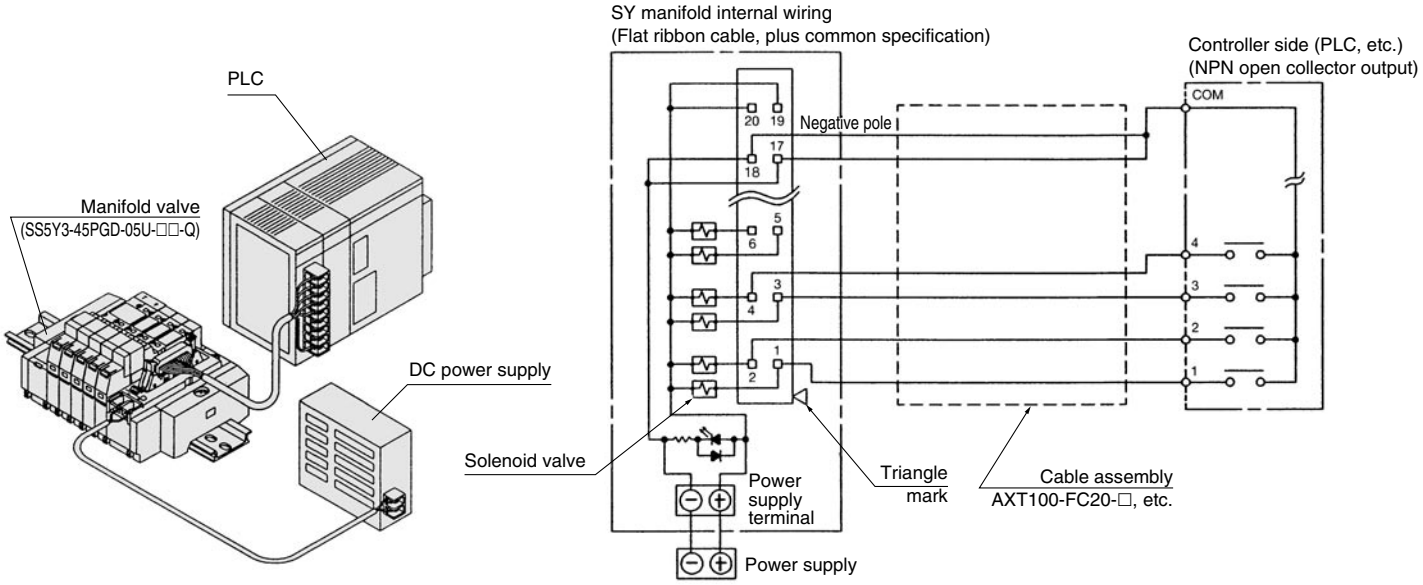

2. Wiring example when not using manifold power supply terminals (Power is supplied to the controller side or along the wiring, etc.)

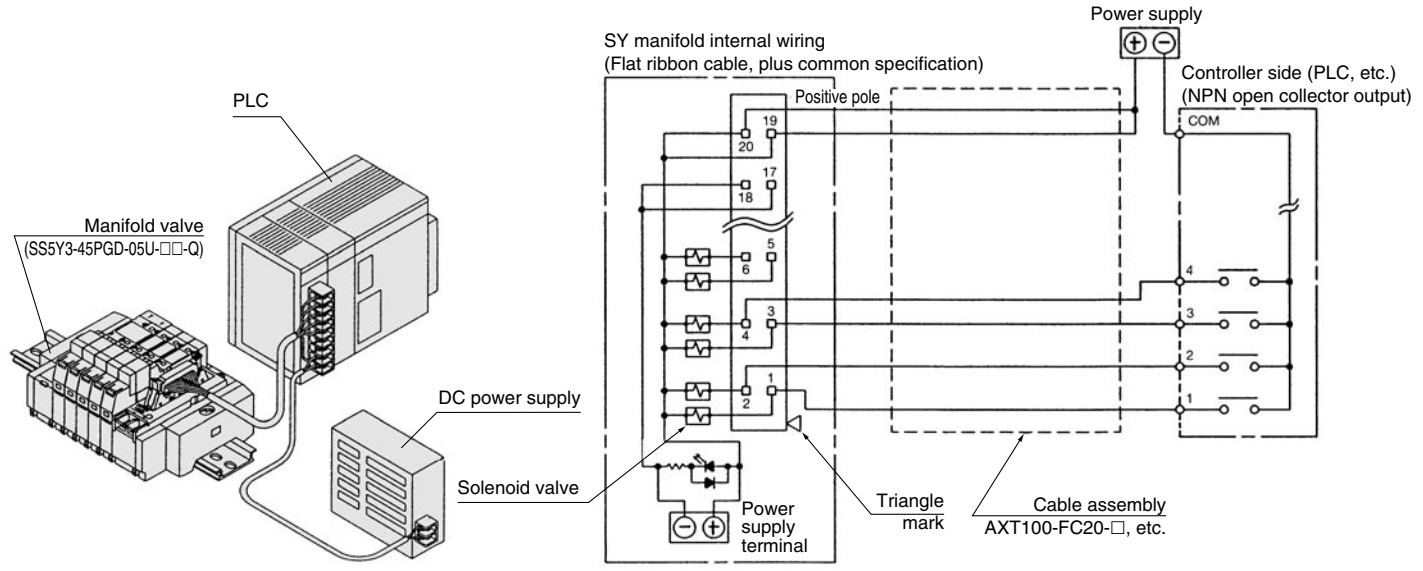

⚠Caution

- Single wire, COM position, etc. of PLC are different from each manufacturer. When connecting with PLC, read the specifications carefully and understand the electrical circuit. Poor wiring could cause damage to PLC, power source, etc. as well as manifold and valve.

SY3000: D-sub Connector/Plug-in

SS5Y3-45FU-[Stations]D-C4, N3 / C6, N7-Q

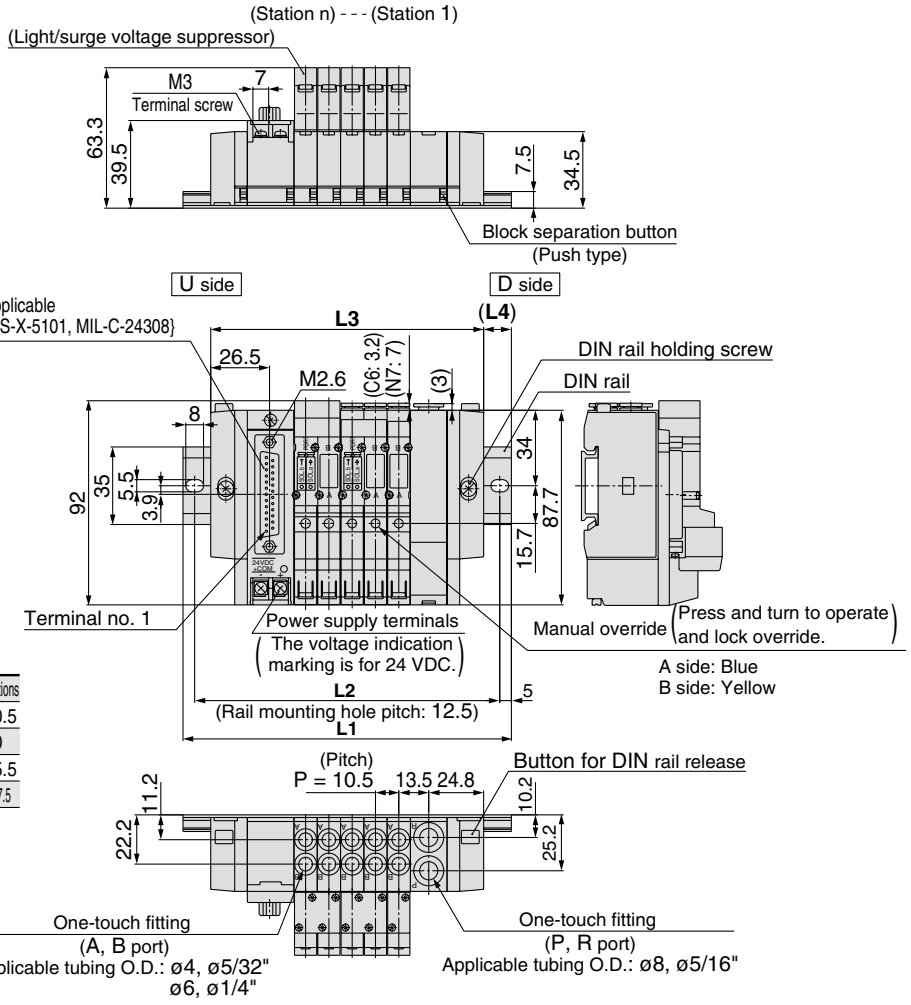

Note) The **L1** to **L4** dimensions of **SS5Y3-45FU-[Stations]U-C4, N3 / C6, N7-Q** are identical to those of SS5Y3-45FU-[Stations]D-C4, N3 / C6, N7-Q.

Stations n	2 stations	3	4	5	6	7	8	9	10 stations
L1	123	135.5	148	148	160.5	173	185.5	198	210.5
L2	112.5	125	137.5	137.5	150	162.5	175	187.5	200
L3	91.5	102	112.5	123	133.5	144	154.5	165	175.5
L4	15.5	16.5	17.5	12.5	13.5	14.5	15.5	16.5	17.5

SS5Y3-45FU-[Stations]B-C4, N3 / C6, N7-Q

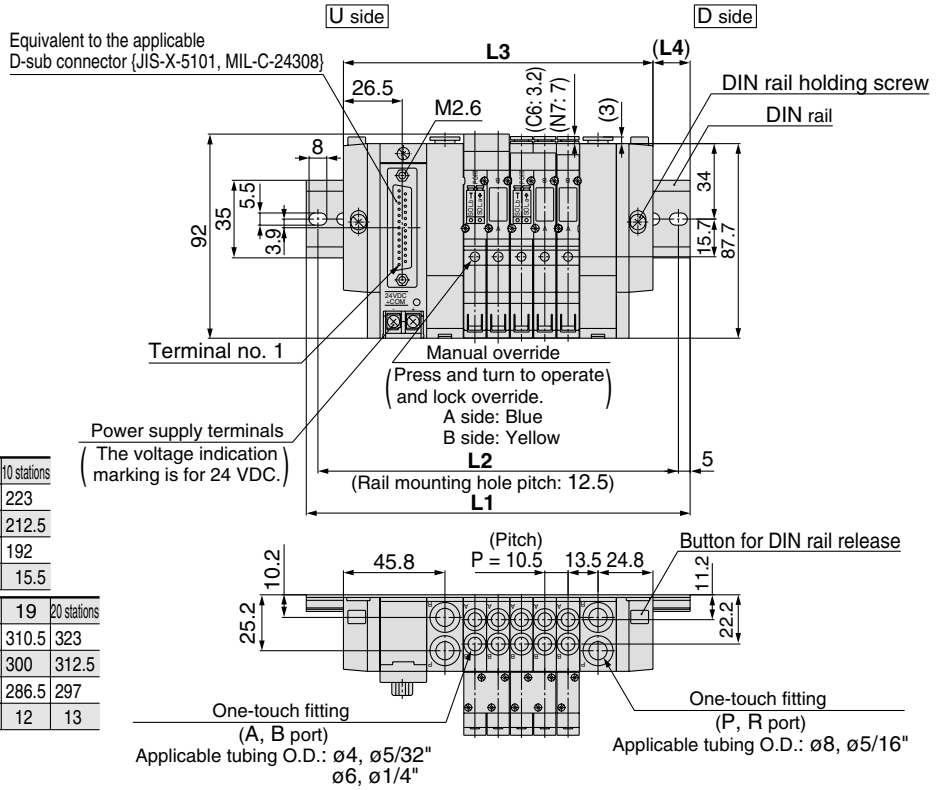

Stations n	2 stations	3	4	5	6	7	8	9	10 stations
L1	135.5	148	160.5	173	185.5	185.5	198	210.5	223
L2	125	137.5	150	162.5	175	175	187.5	200	212.5
L3	108	118.5	129	139.5	150	160.5	171	181.5	192
L4	13.5	14.5	15.5	16.5	17.5	12.5	13.5	14.5	15.5

Stations n	11 stations	12	13	14	15	16	17	18	19	20 stations
L1	235.5	248	248	260.5	273	285.5	298	310.5	310.5	323
L2	225	237.5	237.5	250	262.5	275	287.5	300	300	312.5
L3	202.5	213	223.5	234	244.5	255	265.5	276	286.5	297
L4	16.5	17.5	12	13	14	15	16	17	12	13

SY3000: D-sub Connector/Plug-in

SS5Y3-45FD-[Stations]U-C4, N3 / C6, N7-Q

Note) The **L1** to **L4** dimensions of **SS5Y3-45FD-[Stations]D-C4, N3 / C6, N7-Q** are identical to those of SS5Y3-45FD-[Stations]U-C4,N3 / C6,N7-Q.

Stations n	2 stations	3	4	5	6	7	8	9	10 stations
L1	123	135.5	148	148	160.5	173	185.5	198	210.5
L2	112.5	125	137.5	137.5	150	162.5	175	187.5	200
L3	91.5	102	112.5	123	133.5	144	154.5	165	175.5
L4	15.5	16.5	17.5	12.5	13.5	14.5	15.5	16.5	17.5

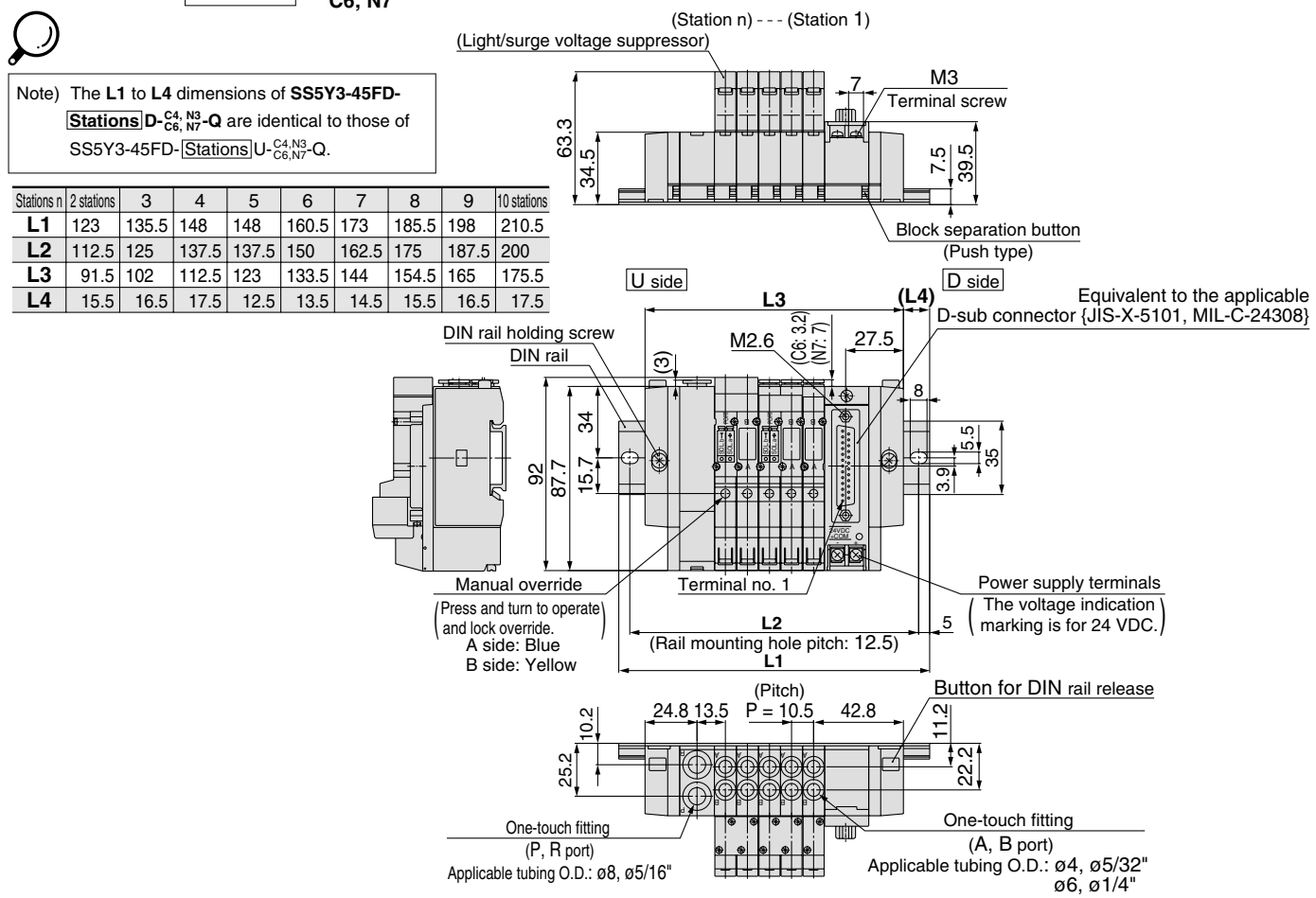

SS5Y3-45FD-[Stations]B-C4,N3 / C6,N7-Q

Stations n	2 stations	3	4	5	6	7	8	9	10 stations
L1	135.5	148	160.5	173	185.5	185.5	198	210.5	223
L2	125	137.5	150	162.5	175	175	187.5	200	212.5
L3	108	118.5	129	139.5	150	160.5	171	181.5	192
L4	13.5	14.5	15.5	16.5	17.5	12.5	13.5	14.5	15.5

Stations n	11 stations	12	13	14	15	16	17	18	19	20 stations
L1	235.5	248	248	260.5	273	285.5	298	310.5	310.5	323
L2	225	237.5	237.5	250	262.5	275	287.5	300	300	312.5
L3	202.5	213	223.5	234	244.5	255	265.5	276	286.5	297
L4	16.5	17.5	12	13	14	15	16	17	12	13

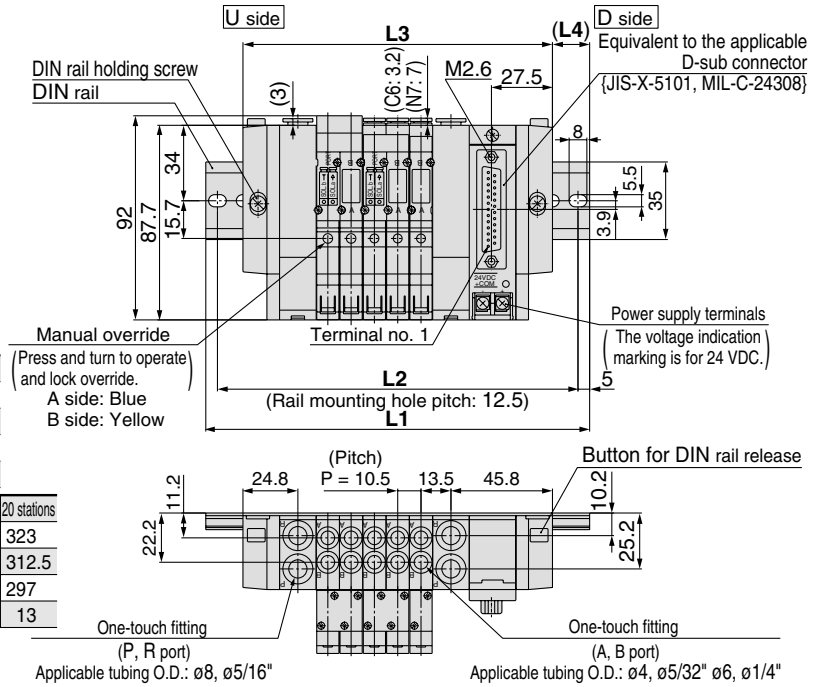

SY5000: D-sub Connector/Plug-in

SS5Y5-45FU-[Stations]D-C4, N3 C6, N7 C8, N9 -Q

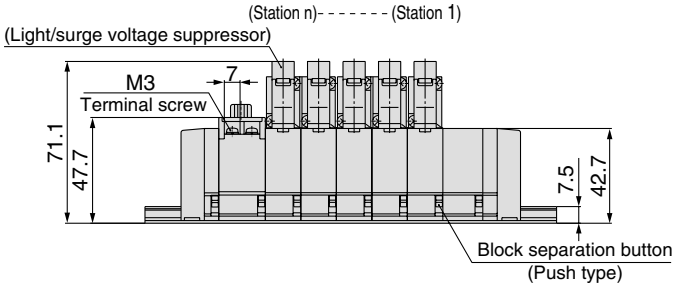

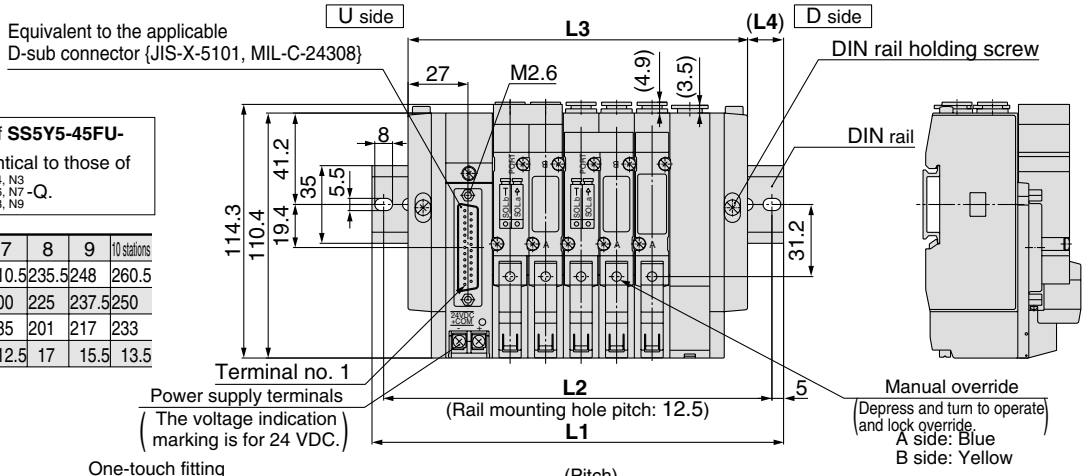

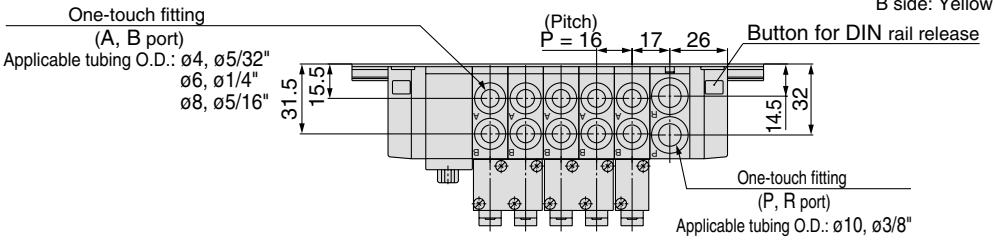

Note) **The L1 to L4 dimensions of SS5Y5-45FU-[Stations]U-C4, N3 C6, N7 C8, N9 -Q are identical to those of SS5Y5-45FU-[Stations]D-C4, N3 C6, N7 C8, N9 -Q.**

Stations n	2 stations	3	4	5	6	7	8	9	10 stations
L1	135.5	148	160.5	185.5	198	210.5	235.5	248	260.5
L2	125	137.5	150	175	187.5	200	225	237.5	250
L3	105	121	137	153	169	185	201	217	233
L4	15	13.5	11.5	16	14.5	12.5	17	15.5	13.5

SS5Y5-45FU-[Stations]B-C4, N3 C6, N7 C8, N9 -Q

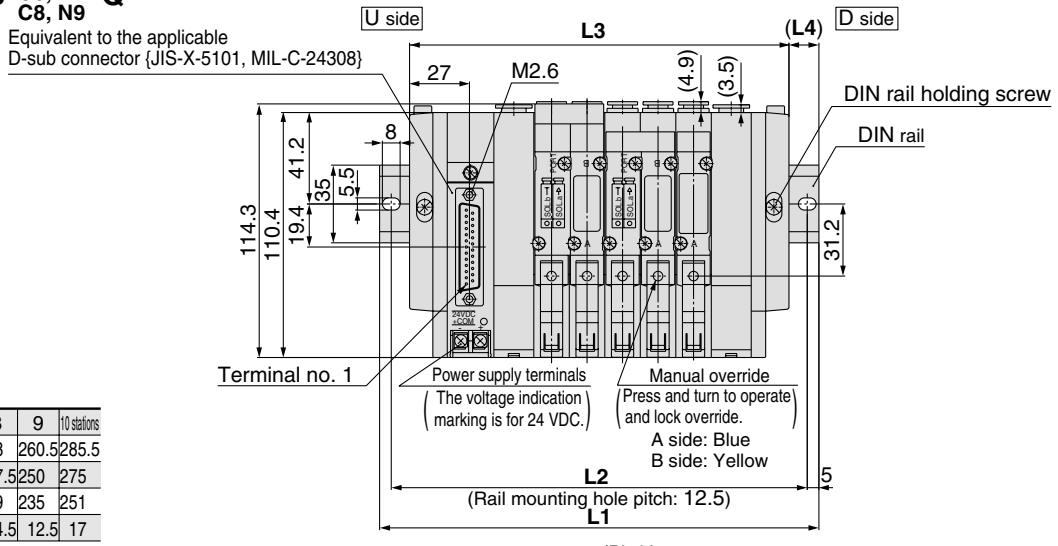

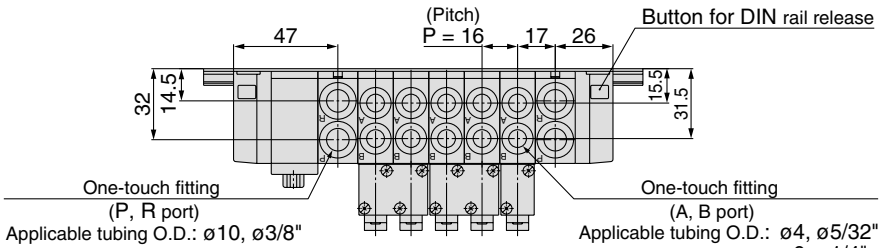

Stations n	2 stations	3	4	5	6	7	8	9	10 stations
L1	148	173	185.5	198	210.5	235.5	248	260.5	285.5
L2	137.5	162.5	175	187.5	200	225	237.5	250	275
L3	123	139	155	171	187	203	219	235	251
L4	12.5	17	15	13.5	11.5	16	14.5	12.5	17

Stations n	11 stations	12	13	14	15	16	17	18	19	20 stations
L1	298	310.5	323	348	360.5	373	398	410.5	423	435.5
L2	287.5	300	312.5	337.5	350	362.5	387.5	400	412.5	425
L3	267	283	299	315	331	347	363	379	395	411
L4	15.5	13.5	12	16.5	14.5	13	17.5	15.5	14	12

SY5000: D-sub Connector/Plug-in

SS5Y5-45FD-[Stations]U-C4, N3 / C6, N7 / C8, N9-Q

Note) **The L1** to **L4** dimensions of **SS5Y5-45FD-[Stations]D-C4, N3 / C6, N7 / C8, N9-Q** are identical to those of SS5Y5-45FD-[Stations]U-C4, N3 / C6, N7 / C8, N9-Q.

Stations n	2 stations	3	4	5	6	7	8	9	10 stations
L1	135.5	1 48	160.5	185.5	198	210.5	235.5	248	260.5
L2	125	137.5	150	175	187.5	200	225	237.5	250
L3	105	121	137	153	169	185	201	217	233
L4	15	13.5	11.5	16	14.5	12.5	17	15.5	13.5

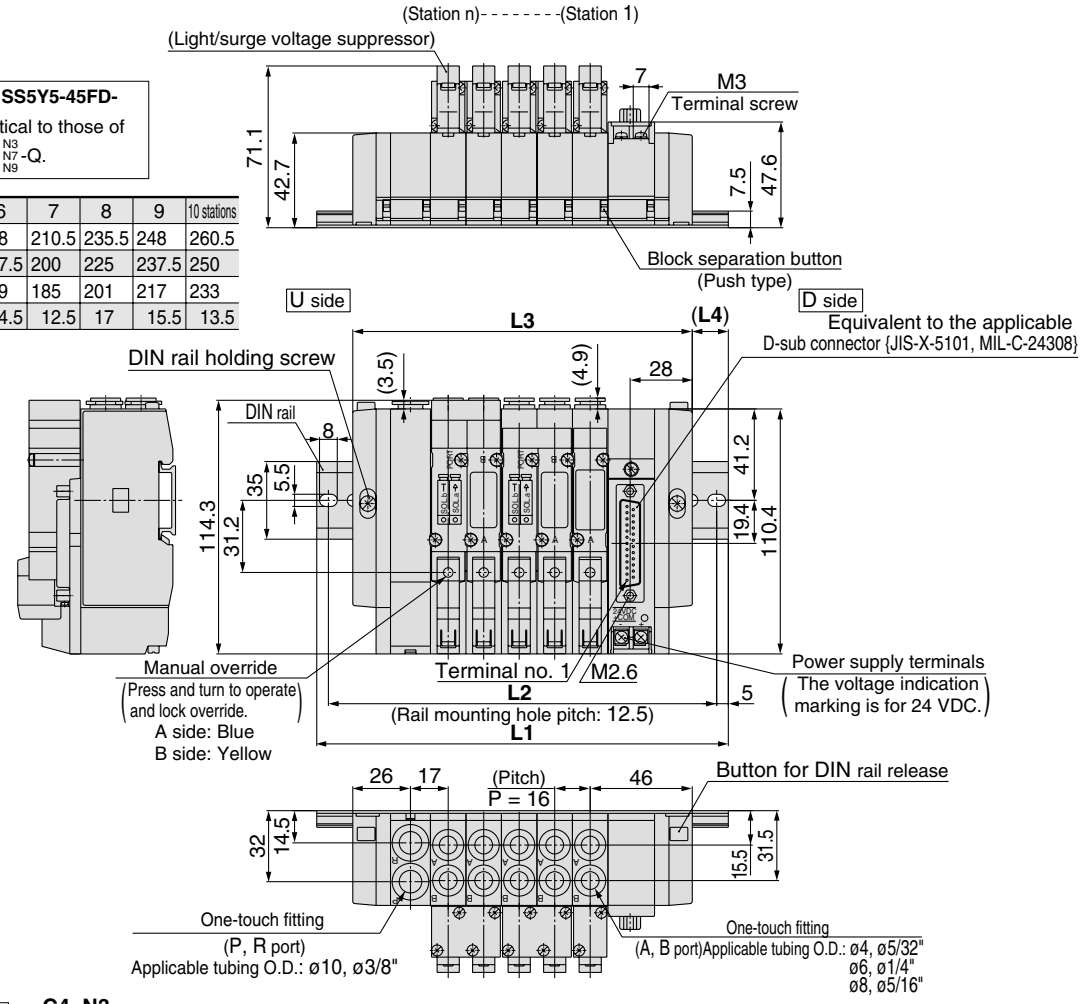

SS5Y5-45FD-[Stations]B-C4, N3 / C6, N7 / C8, N9-Q

Stations n	2 stations	3	4	5	6	7	8	9	10 stations
L1	148	173	185.5	198	210.5	235.5	248	260.5	285.5
L2	137.5	162.5	175	187.5	200	225	237.5	250	275
L3	123	139	155	171	187	203	219	235	251
L4	12.5	17	15	13.5	11.5	16	14.5	12.5	17

Stations n	11 stations	12	13	14	15	16	17	18	19	20 stations
L1	298	310.5	323	348	360.5	373	398	410.5	423	435.5
L2	287.5	300	312.5	337.5	350	362.5	387.5	400	412.5	425
L3	267	283	299	315	331	347	363	379	395	411
L4	15.5	13.5	12	16.5	14.5	13	17.5	15.5	14	12

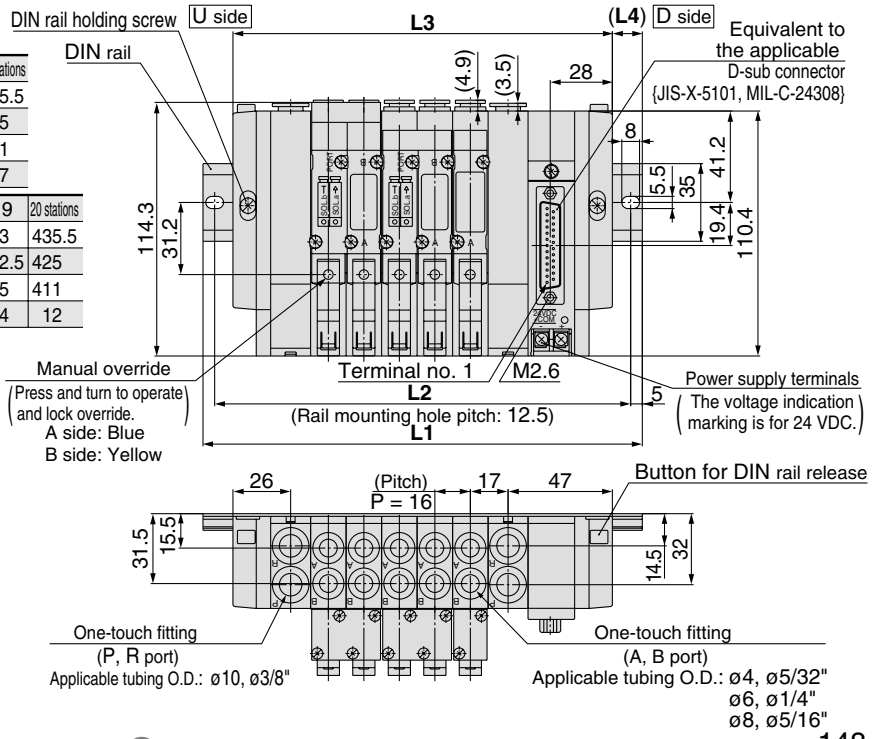

SY3000: Flat Ribbon Cable/Plug-in

SS5Y3-45PU-[Stations] D-C4, N3 C6, N7 -Q (26 pins)

Note) **The L1** to **L4** dimensions of **SS5Y3-45P□U-[Stations] U-C4, N3 C6, N7 -Q** are identical to those of SS5Y3-45PIU-[Stations] D-C4, N3 C6, N7 -Q.

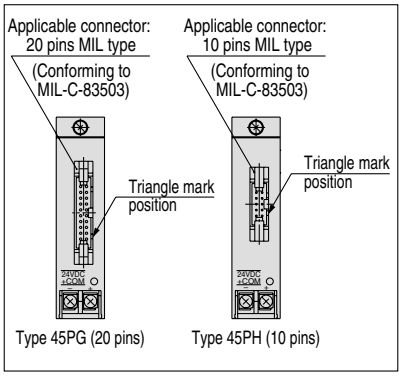

Stations n	2 stations	3	4	5	6	7	8	9	10 stations
L1	123	135.5	148	148	160.5	173	185.5	198	210.5
L2	112.5	125	137.5	137.5	150	162.5	175	187.5	200
L3	91.5	102	112.5	123	133.5	144	154.5	165	175.5
L4	15.5	16.5	17.5	12.5	13.5	14.5	15.5	16.5	17.5

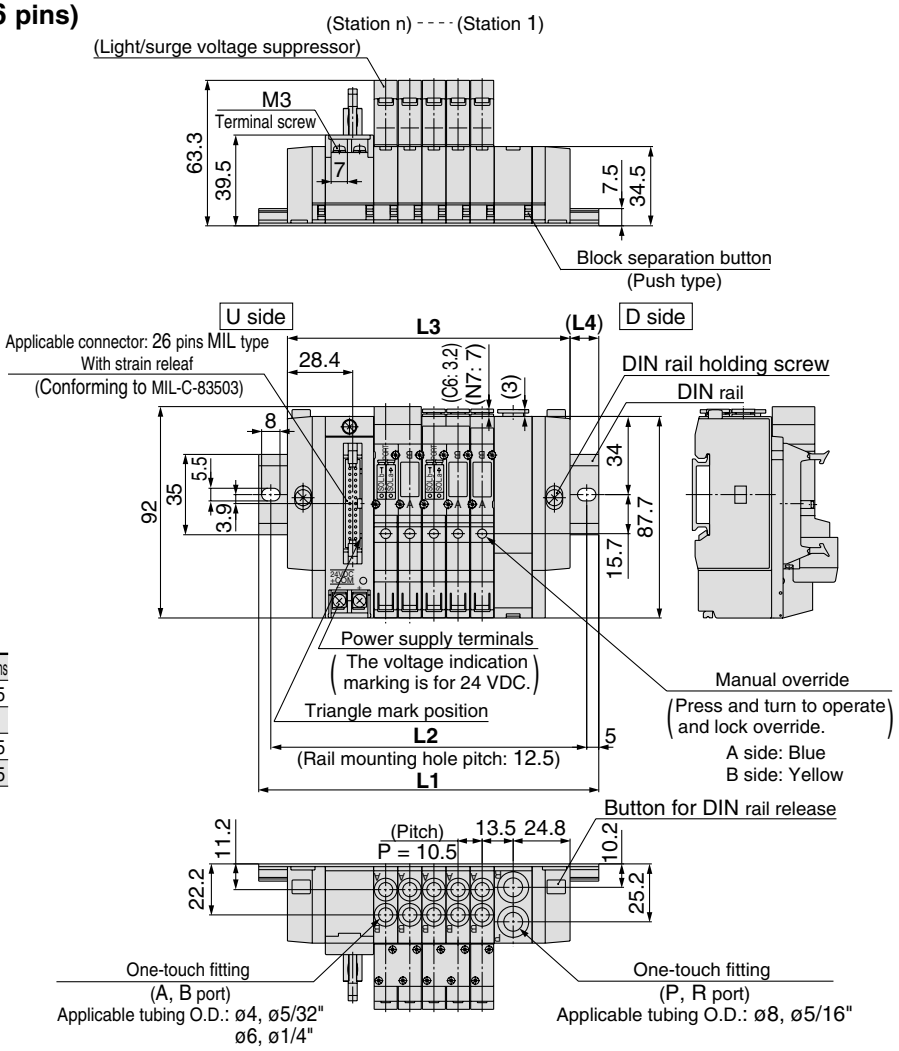

SS5Y3-45PU-[Stations] B-C4, N3 C6, N7 -Q (26 pins)

Stations n	2 stations	3	4	5	6	7	8	9	10 stations
L1	135.5	148	160.5	173	185.5	185.5	198	210.5	223
L2	125	137.5	150	162.5	175	175	187.5	200	212.5
L3	108	118.5	129	139.5	150	160.5	171	181.5	192
L4	13.5	14.5	15.5	16.5	17.5	12.5	13.5	14.5	15.5

Stations n	11 stations	12	13	14	15	16	17	18	19	20 stations
L1	235.5	248	248	260.5	273	285.5	298	310.5	310.5	323
L2	225	237.5	237.5	250	262.5	275	287.5	300	300	312.5
L3	202.5	213	223.5	234	244.5	255	265.5	276	286.5	297
L4	16.5	17.5	12	13	14	15	16	17	12	13

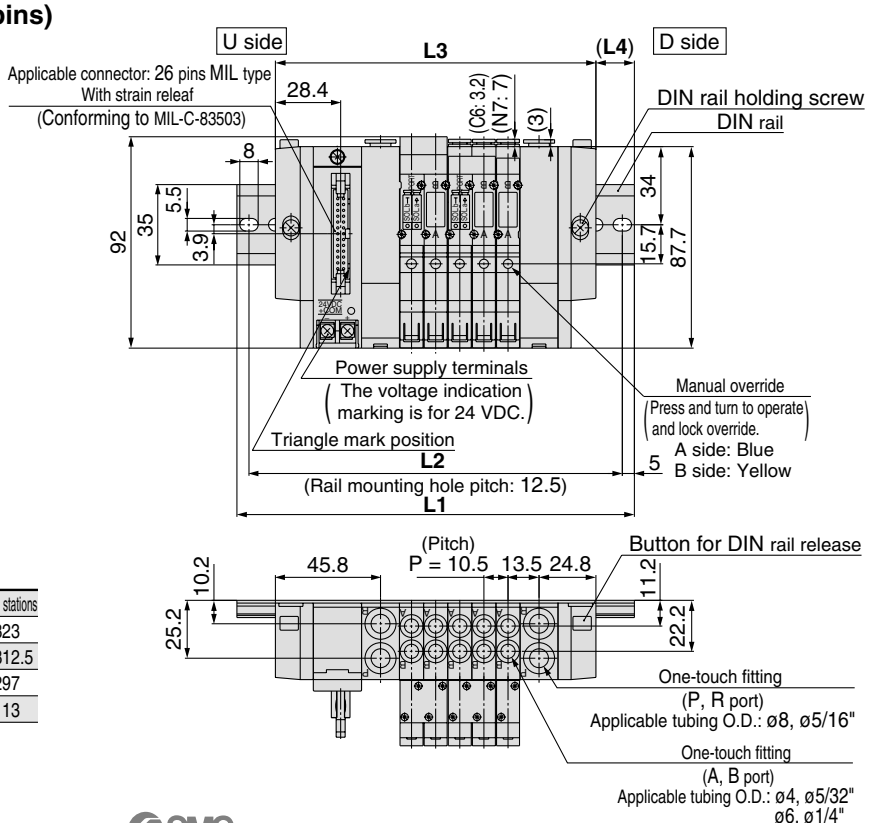

SY3000: Flat Ribbon Cable/Plug-in

SS5Y3-45PD-[Stations]U-$^{C4,N3}_{C6,N7}$-Q (26 pins)

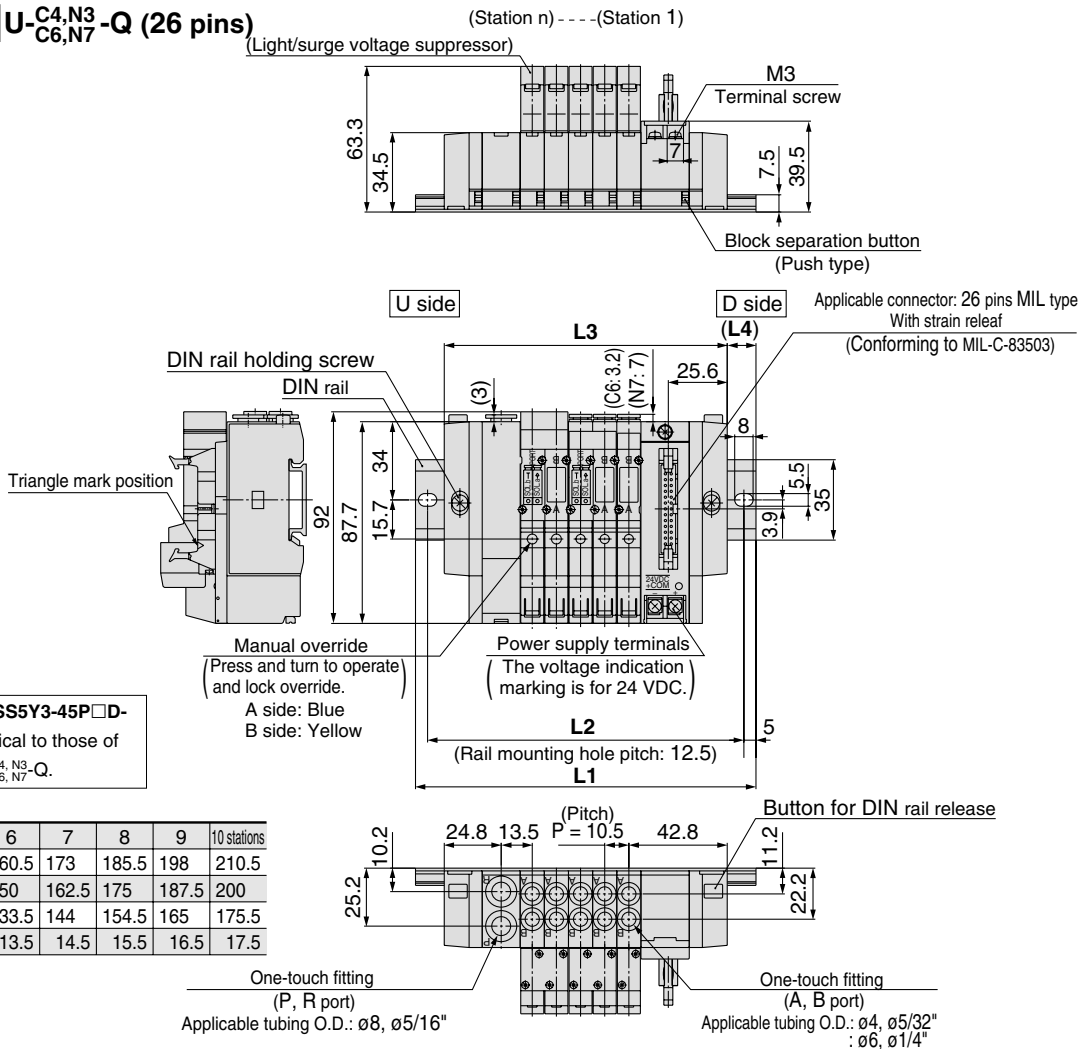

Note) The **L1** to **L4** dimensions of **SS5Y3-45P□D-[Stations]D-$^{C4, N3}_{C6, N7}$-Q** are identical to those of SS5Y3-45P□D-[Stations]U-$^{C4, N3}_{C6, N7}$-Q.

Stations n	2 stations	3	4	5	6	7	8	9	10 stations
L1	123	135.5	148	148	160.5	173	185.5	198	210.5
L2	112.5	125	137.5	137.5	150	162.5	175	187.5	200
L3	91.5	102	112.5	123	133.5	144	154.5	165	175.5
L4	15.5	16.5	17.5	12.5	13.5	14.5	15.5	16.5	17.5

SS5Y3-45PD-[Stations]B-$^{C4,N3}_{C6,N7}$-Q (26 pins)

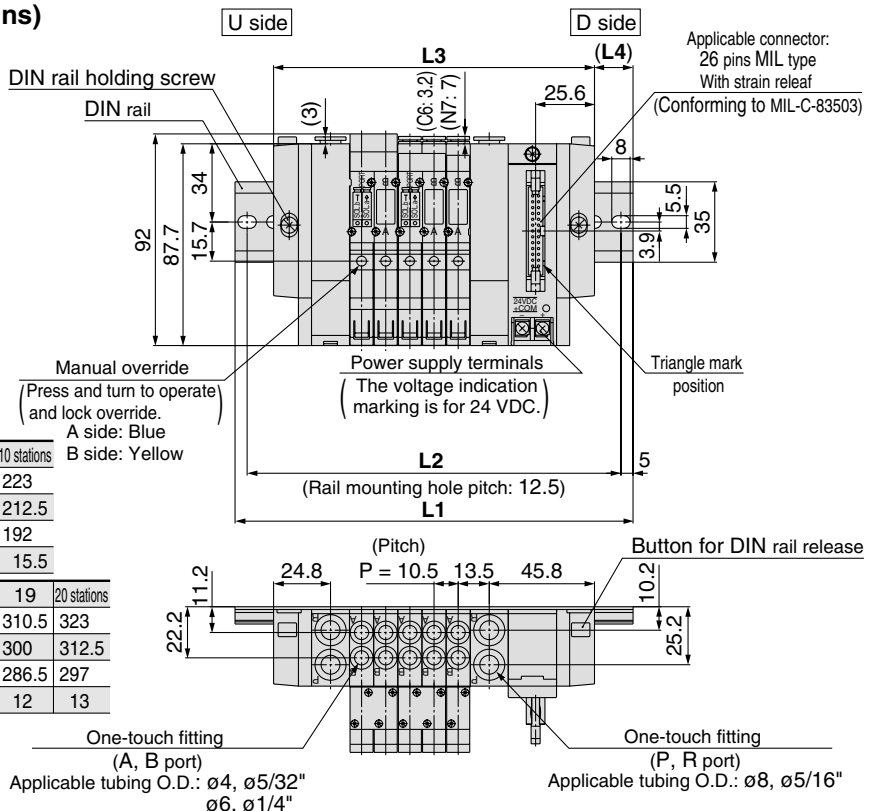

Stations n	2 stations	3	4	5	6	7	8	9	10 stations
L1	135.5	148	160.5	173	185.5	185.5	198	210.5	223
L2	125	137.5	150	162.5	175	175	187.5	200	212.5
L3	108	118.5	129	139.5	150	160.5	171	181.5	192
L4	13.5	14.5	15.5	16.5	17.5	12.5	13.5	14.5	15.5

Stations n	11 stations	12	13	14	15	16	17	18	19	20 stations
L1	235.5	248	248	260.5	273	285.5	298	310.5	310.5	323
L2	225	237.5	237.5	250	262.5	275	287.5	300	300	312.5
L3	202.5	213	223.5	234	244.5	255	265.5	276	286.5	297
L4	16.5	17.5	12	13	14	15	16	17	12	13

SY5000: Flat Ribbon Cable/Plug-in

SS5Y5-45PU-[Stations]D-C4, N3 C6, N7 -Q (26 pins)

Note) **The L1** to **L4** dimensions of **SS5Y5-45P□U-[Stations]U-C4, N3 C6, N7 C8, N9 -Q** are identical to those of SS5Y5-45P□U-[Stations]D-C4, N3 C6, N7 C8, N9 -Q.

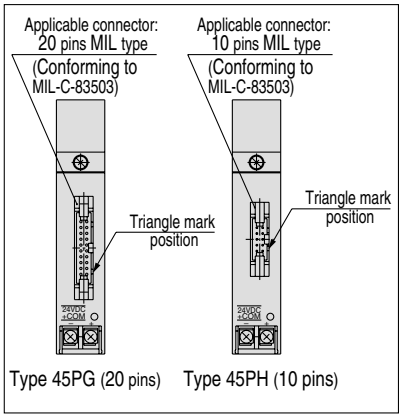

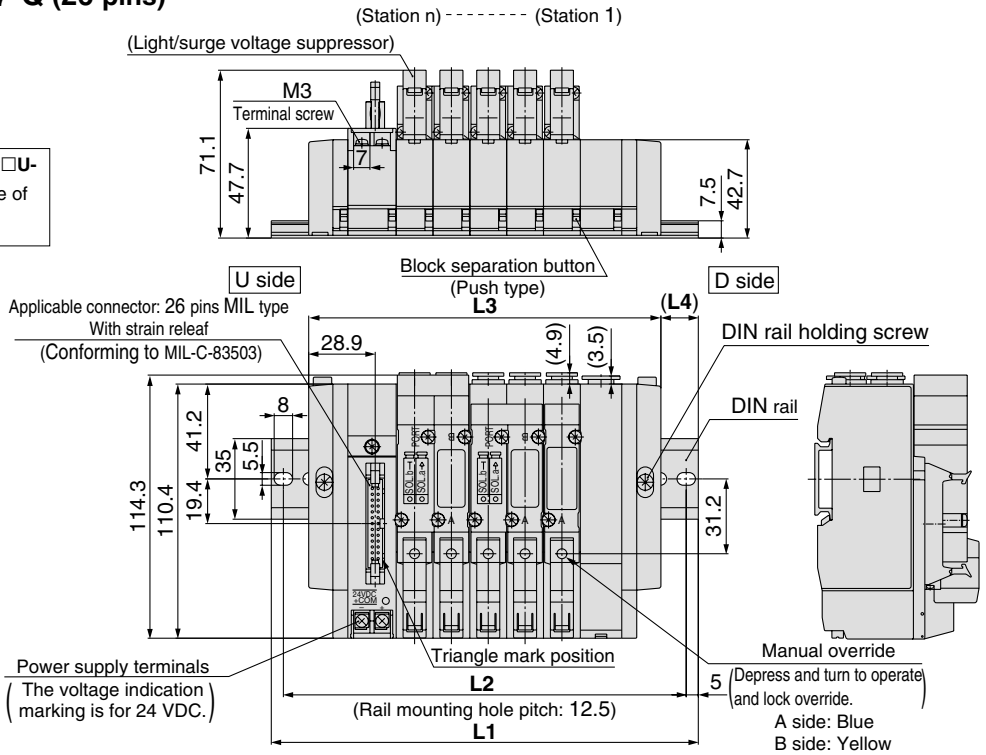

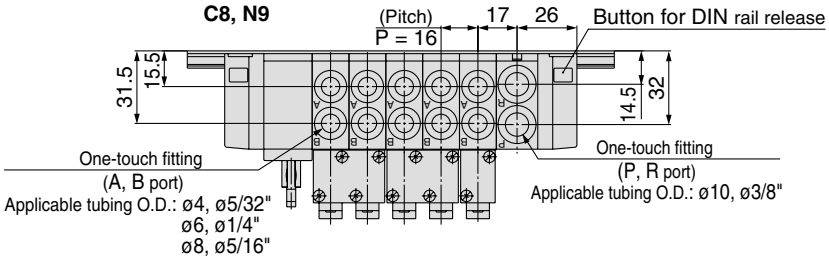

Stations n	2 stations	3	4	5	6	7	8	9	10 stations
L1	135.5	148	160.5	185.5	198	210.5	235.5	248	260.5
L2	125	137.5	150	175	187.5	200	225	237.5	250
L3	105	121	137	153	169	185	201	217	233
L4	15	13.5	11.5	16	14.5	12.5	17	15.5	13.5

SS5Y5-45PU-[Stations]B-C4, N3 C6, N7 C8, N9 -Q (26 pins)

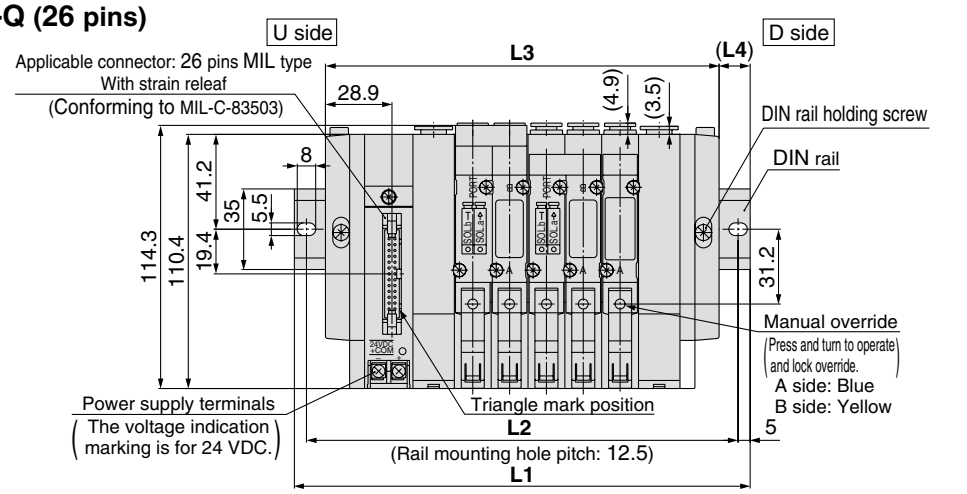

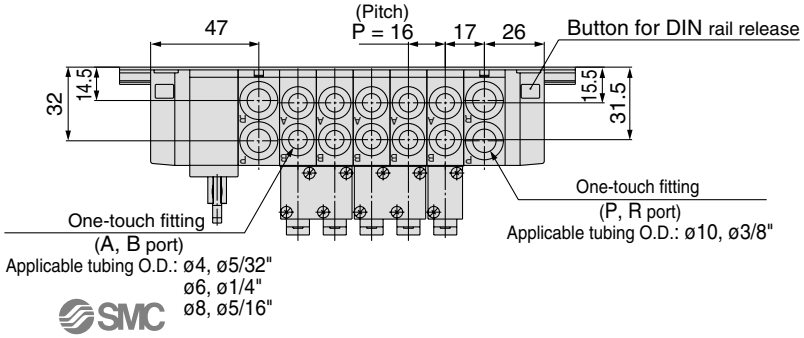

Stations n	2 stations	3	4	5	6	7	8	9	10 stations
L1	148	173	185.5	198	210.5	235.5	248	260.5	285.5
L2	137.5	162.5	175	187.5	200	225	237.5	250	275
L3	123	139	155	171	187	203	219	235	251
L4	12.5	17	15	13.5	11.5	16	14.5	12.5	17

Stations n	11 stations	12	13	14	15	16	17	18	19	20 stations
L1	298	310.5	323	348	360.5	373	398	410.5	423	435.5
L2	287.5	300	312.5	337.5	350	362.5	387.5	400	412.5	425
L3	267	283	299	315	331	347	363	379	395	411
L4	15.5	13.5	12	16.5	14.5	13	17.5	15.5	14	12

SY5000: Flat Ribbon Cable/Plug-in

SS5Y5-45PD-[Stations]U-C4, N3 C6, N7 C8, N9-Q (26 pins)

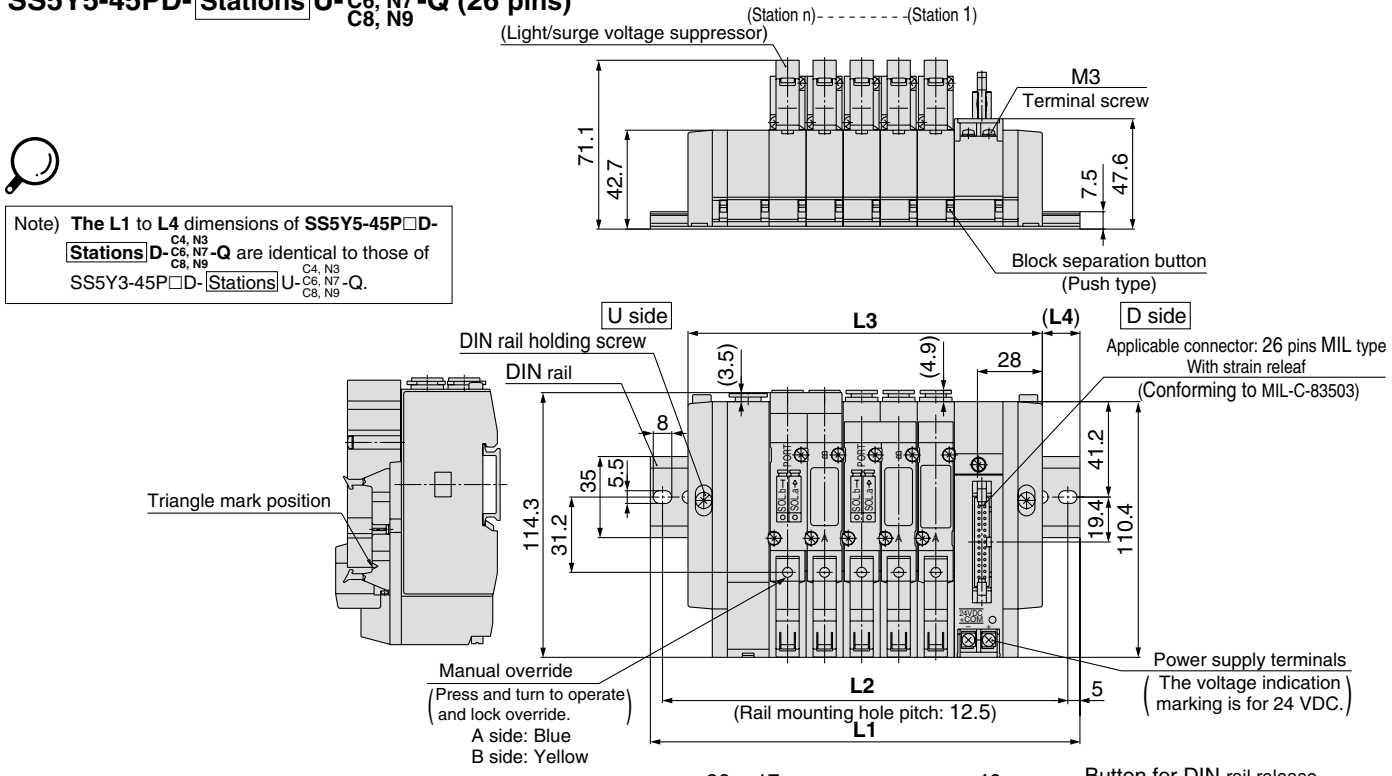

Stations n	2 stations	3	4	5	6	7	8	9	10 stations
L1	135.5	148	160.5	185.5	198	210.5	235.5	248	260.5
L2	125	137.5	150	175	187.5	200	225	237.5	250
L3	105	121	137	153	169	185	201	217	233
L4	15	13.5	11.5	16	14.5	12.5	17	15.5	13.5

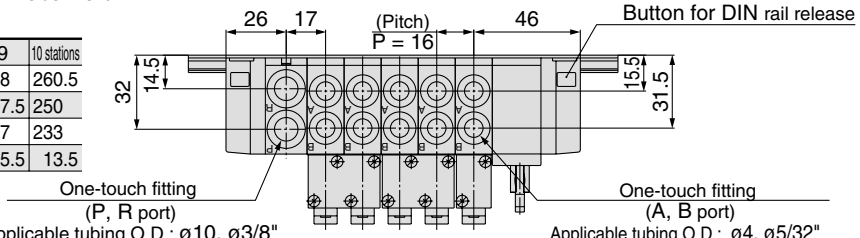

Note) **The L1** to **L4** dimensions of **SS5Y5-45P□D-[Stations]D-C4, N3 C6, N7 C8, N9-Q** are identical to those of SS5Y3-45P□D-[Stations]U-C4, N3 C6, N7 C8, N9-Q.

SS5Y5-45PD-[Stations]B-C4, N3 C6, N7 C8, N9-Q (26 pins)

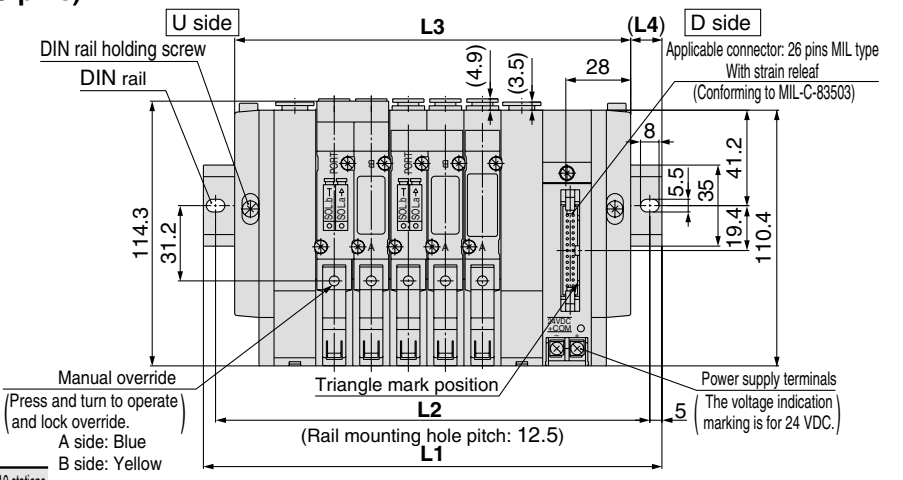

Stations n	2 stations	3	4	5	6	7	8	9	10 stations
L1	148	173	185.5	198	210.5	235.5	248	260.5	285.5
L2	137.5	162.5	175	187.5	200	225	237.5	250	275
L3	123	139	155	171	187	203	219	235	251
L4	12.5	17	15	13.5	11.5	16	14.5	12.5	17

Stations n	11 stations	12	13	14	15	16	17	18	19	20 stations
L1	298	310.5	323	348	360.5	373	398	410.5	423	435.5
L2	287.5	300	312.5	337.5	350	362.5	387.5	400	412.5	425
L3	267	283	299	315	331	347	363	379	395	411
L4	15.5	13.5	12	16.5	14.5	13	17.5	15.5	14	12

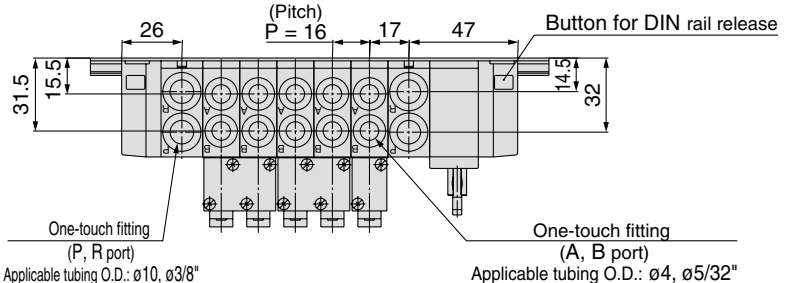

SY3000: 9 Pins Terminal Block/Plug-in

SS5Y3-45TU-[Stations] D-$^{C4, N3}_{C6, N7}$-Q (9 pins)

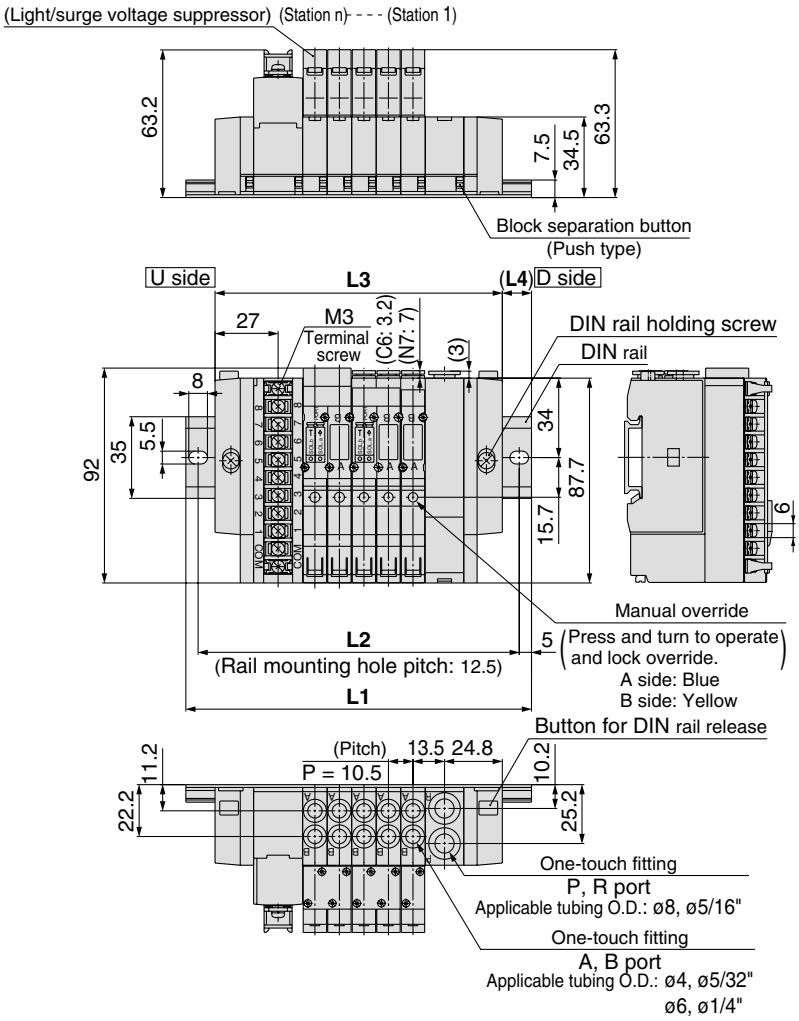

Note) The **L1** to **L4** dimensions of **SS5Y3-45TU-[Stations]U-$^{C4, N3}_{C6, N7}$-Q**, **SS5Y3-45TD-[Stations]U-$^{C4, N3}_{C6, N7}$-Q**, **SS5Y3-45TD-[Stations]D-$^{C4, N3}_{C6, N7}$-Q** are identical those of SS5Y3-45TU-[Stations]D-$^{C4, N3}_{C6, N7}$-Q.

Stations n	2 stations	3	4	5	6	7	8 stations
L1	123	135.5	148	148	160.5	173	185.5
L2	112.5	125	137.5	137.5	150	162.5	175
L3	91.5	102	112.5	123	133.5	144	154.5
L4	15.5	16.5	17.5	12.5	13.5	14.5	15.5

SS5Y3-45TU-[Stations] B-$^{C4, N3}_{C6, N7}$-Q (9 pins)

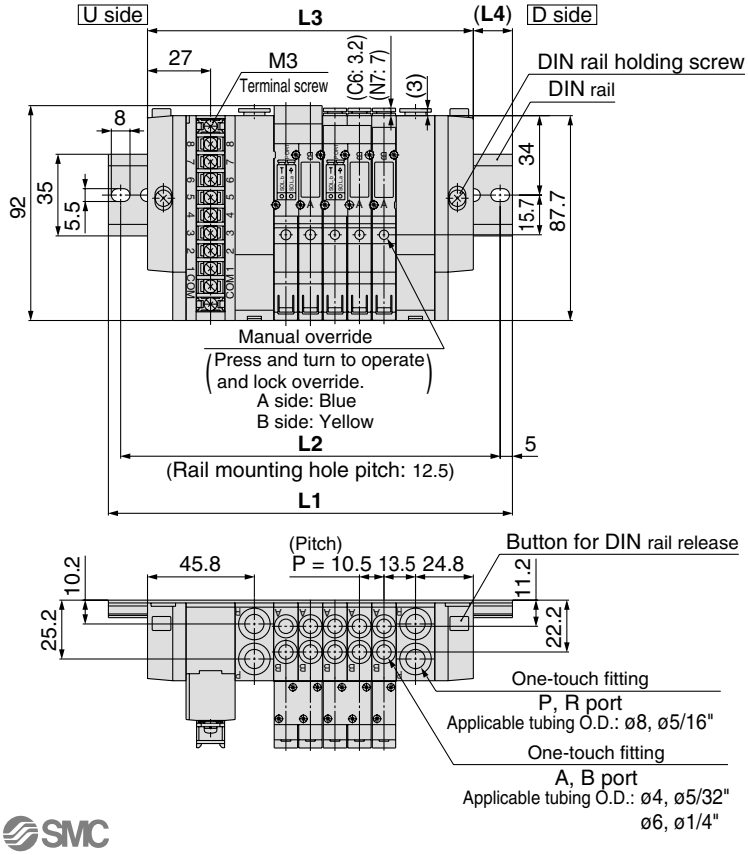

Note) The **L1** to **L4** dimensions of **SS5Y3-45TD-[Stations]B-$^{C4, N3}_{C6, N7}$-Q** are identical to those of SS5Y3-45TU-[Stations]B-$^{C4, N3}_{C6, N7}$-Q.

Stations n	2 stations	3	4	5	6	7	8 stations
L1	135.5	148	160.5	173	185.5	185.5	198
L2	125	137.5	150	162.5	175	175	187.5
L3	108	118.5	129	139.5	150	160.5	171
L4	13.5	14.5	15.5	16.5	17.5	12.5	13.5

SY5000: 9 Pins Terminal Block/Plug-in

SS5Y5-45TU-[Stations]D-C4, N3 C6, N7 C8, N9-Q (9 pins)

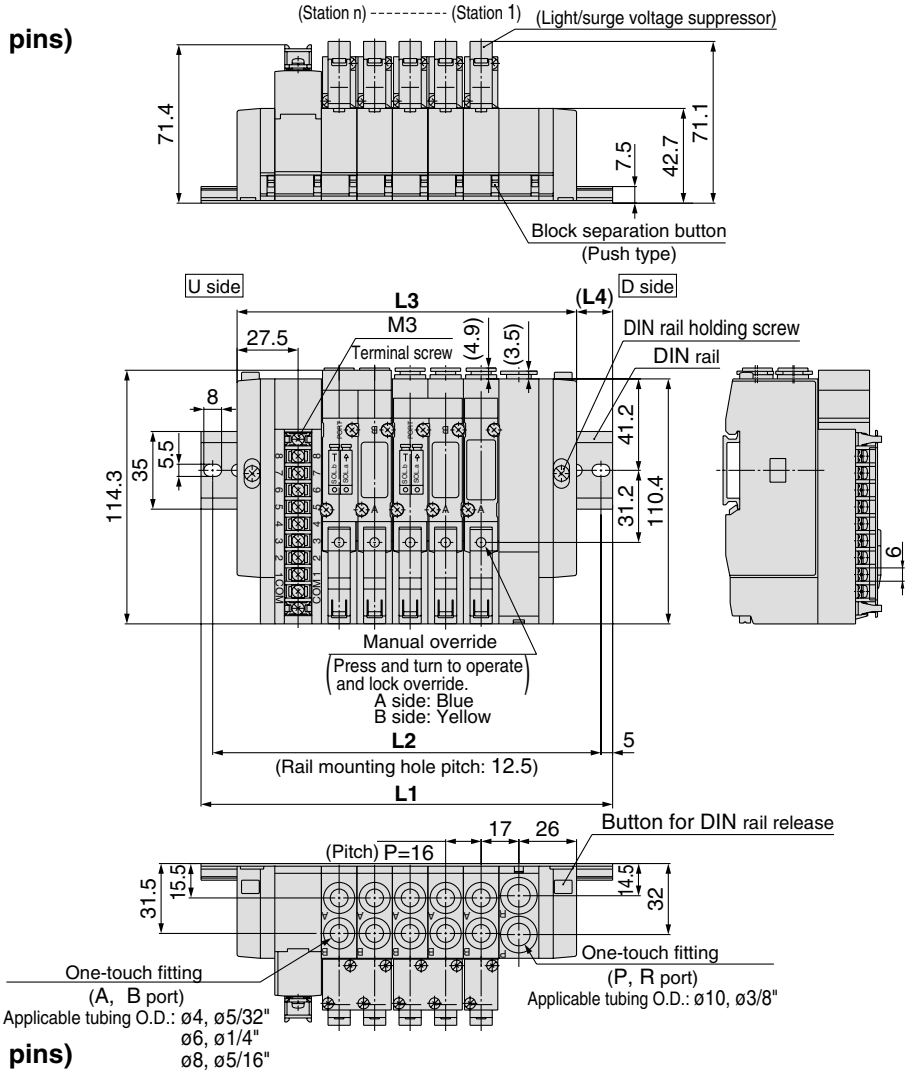

Note) The **L1** to **L4** dimensions of **SS5Y5-45TU-[Stations]U-C4, N3 C6, N7 C8, N9-Q**, **SS5Y5-45TD-[Stations]U-C4, N3 C6, N7 C8, N9-Q**, **SS5Y5-45TD-[Stations]D-C4, N3 C6, N7 C8, N9-Q** are identical those of SS5Y5-45TU-[Stations]D-C4, N3 C6, N7 C8, N9-Q.

Stations n	2 stations	3	4	5	6	7	8 stations
L1	135.5	148	160.5	185.5	198	210.5	235.5
L2	125	137.5	150	175	187.5	200	225
L3	105	121	137	153	169	185	201
L4	15	13.5	11.5	16	14.5	12.5	17

SS5Y5-45TU-[Stations]B-C4, N3 C6, N7 C8, N9-Q (9 pins)

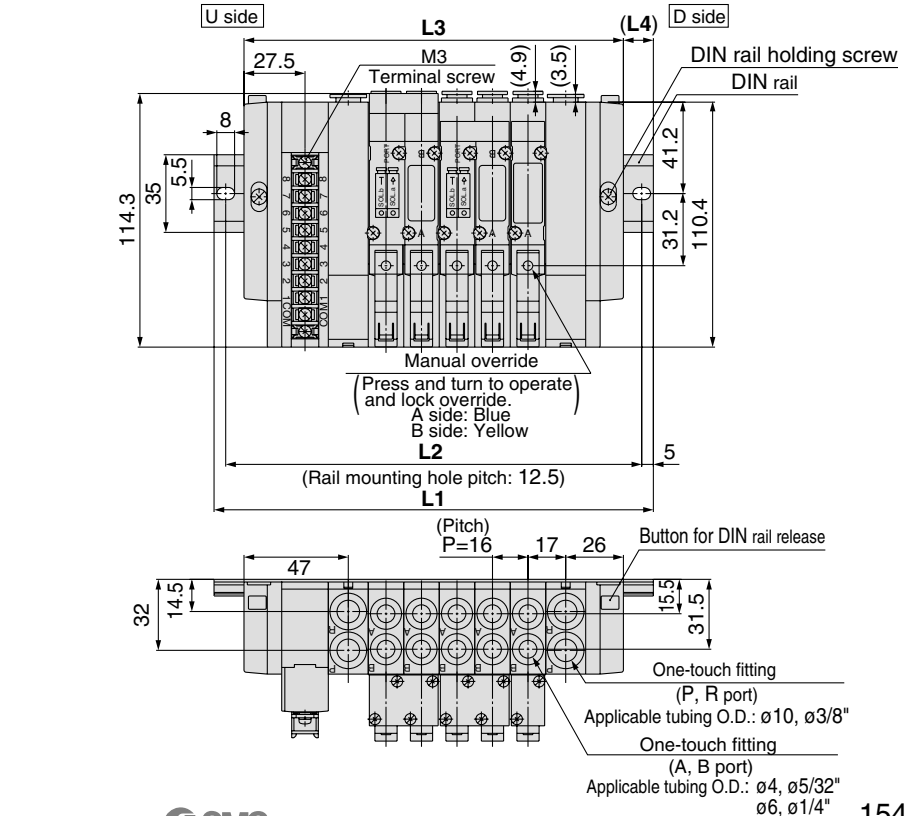

Note) **The L1** to **L4** dimensions of **SS5Y5-45TD-[Stations]B-C4, N3 C6, N7 C8, N9-Q** are identical to those of SS5Y5-45TU-[Stations]B-C4, N3 C6, N7 C8, N9-Q.

Stations n	2 stations	3	4	5	6	7	8 stations
L1	148	173	185.5	198	210.5	235.5	248
L2	137.5	162.5	175	187.5	200	225	237.5
L3	123	139	155	171	187	203	219
L4	12.5	17	15	13.5	11.5	16	14.5

SY3000: 18 Pins Terminal Block/Plug-in

SS5Y3-45T1U-Stations D-C4, N3 C6, N7 -Q (18 pins)

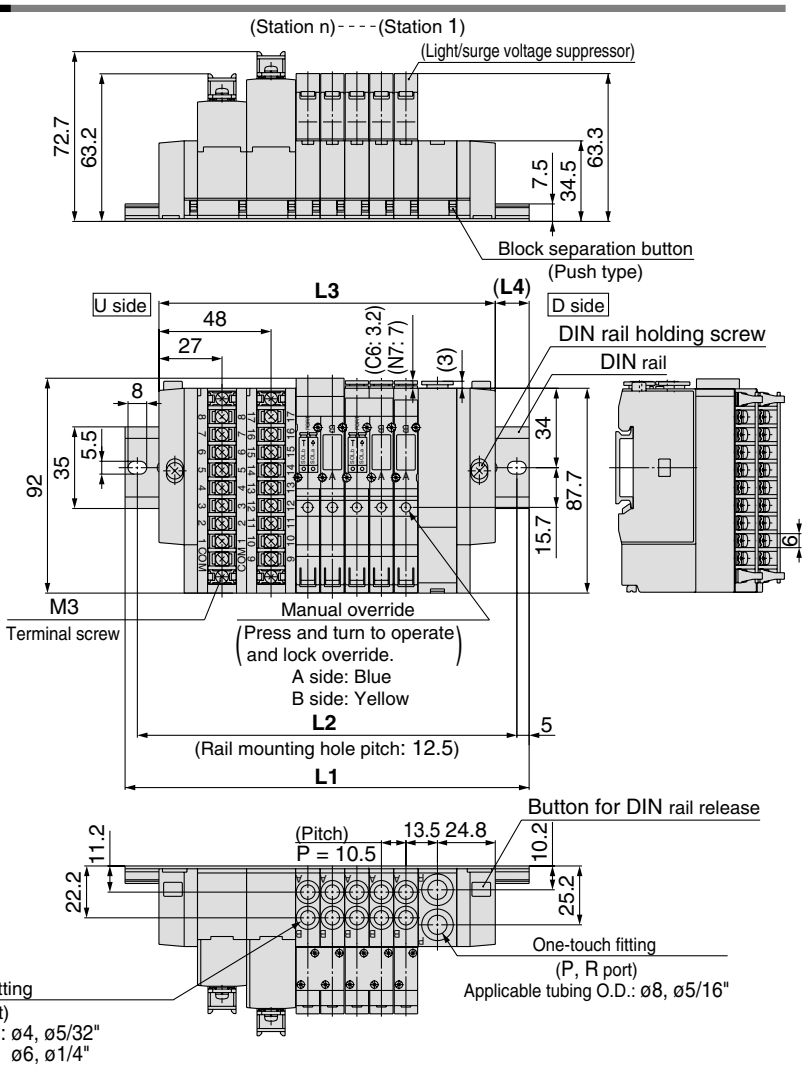

Note) The **L1** to **L4** dimensions of **SS5Y3-45T1U-Stations U-C4, N3 C6, N7 -Q** are identical to those of SS5Y3-45T1U-Stations D-C4, N3 C6, N7 -Q.

Stations n	2 stations	3	4	5	6	7	8	9	10 stations
L1	148	148	160.5	173	185.5	198	210.5	210.5	223
L2	137.5	137.5	150	162.5	175	187.5	200	200	212.5
L3	112.5	123	133.5	144	154.5	165	175.5	186	196.5
L4	17.5	12.5	13.5	14.5	15.5	16.5	17.5	12	13

SS5Y3-45T1U-Stations B-C4, N3 C6, N7 -Q (18 pins)

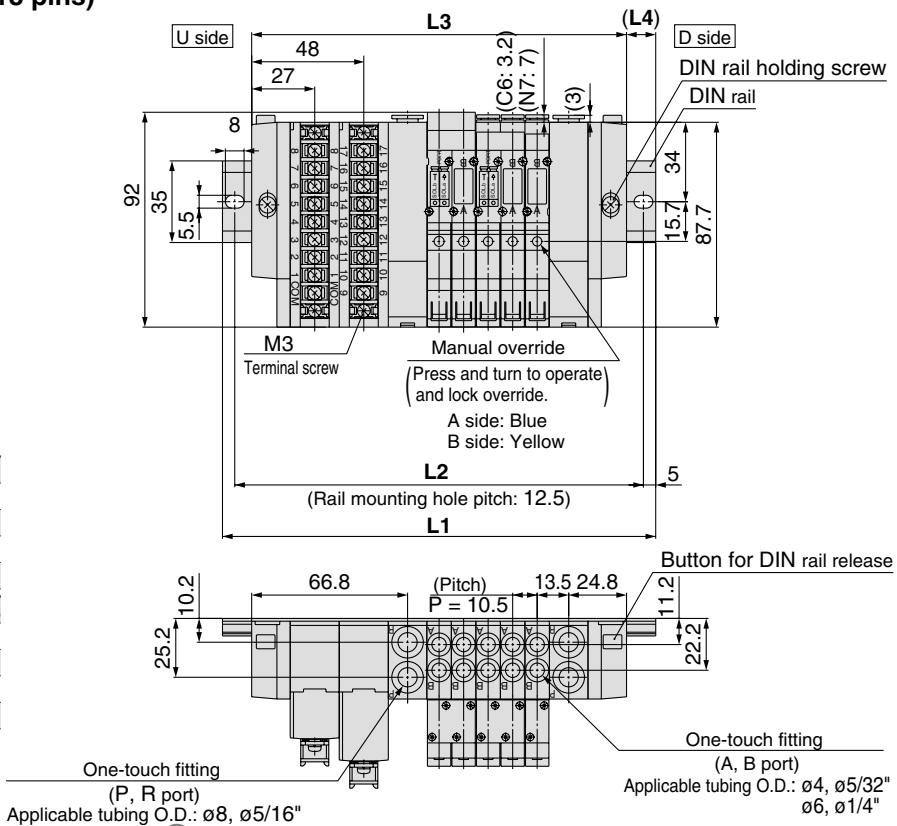

Stations n	2 stations	3	4	5	6	7	8	9 stations
L1	160.5	173	185.5	185.5	198	210.5	223	235.5
L2	150	162.5	175	175	187.5	200	212.5	225
L3	129	139.5	150	160.5	171	181.5	192	202.5
L4	15.5	16.5	17.5	12.5	13.5	14.5	15.5	16.5

Stations n	10 stations	11	12	13	14	15	16	17 stations
L1	248	248	260.5	273	285.5	298	310.5	310.5
L2	237.5	237.5	250	262.5	275	287.5	300	300
L3	213	223.5	234	244.5	255	265.5	276	286.5
L4	17.5	12	13	14	15	16	17	12

SY3000: 9 Pins Terminal Block/Plug-in

SS5Y3-45T1D-[Stations]U-C4, C6, N3, N7-Q (18 pins)

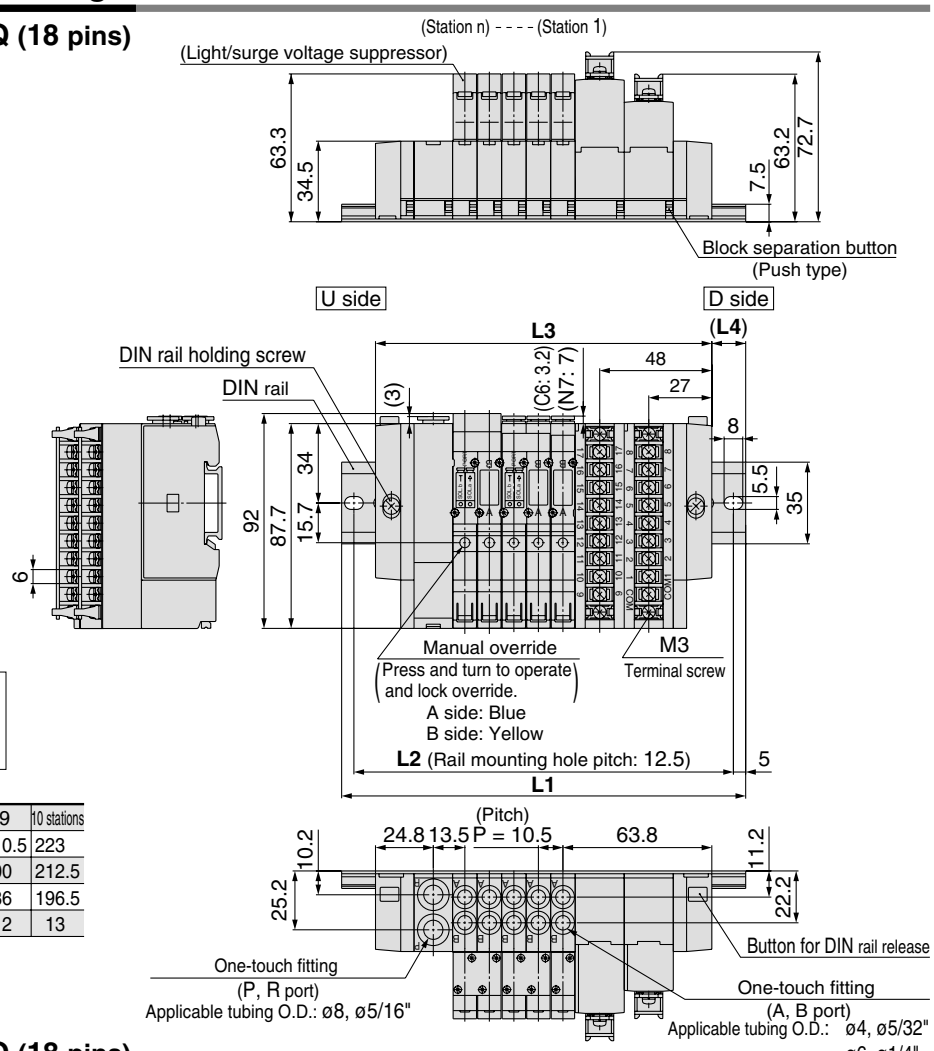

Note) The **L1** to **L4** dimensions of **SS5Y3-45T1D-[Stations]D-C4, C6, N3, N7-Q** are identical to those of SS5Y3-45T1D-[Stations]U-C4, C6, N3, N7-Q.

Stations n	2 stations	3	4	5	6	7	8	9	10 stations
L1	148	148	160.5	173	185.5	198	210.5	210.5	223
L2	137.5	137.5	150	162.5	175	187.5	200	200	212.5
L3	112.5	123	133.5	144	154.5	165	175.5	186	196.5
L4	17.5	12.5	13.5	14.5	15.5	16.5	17.5	12	13

SS5Y3-45T1D-[Stations]B-C4, C6, N3, N7-Q (18 pins)

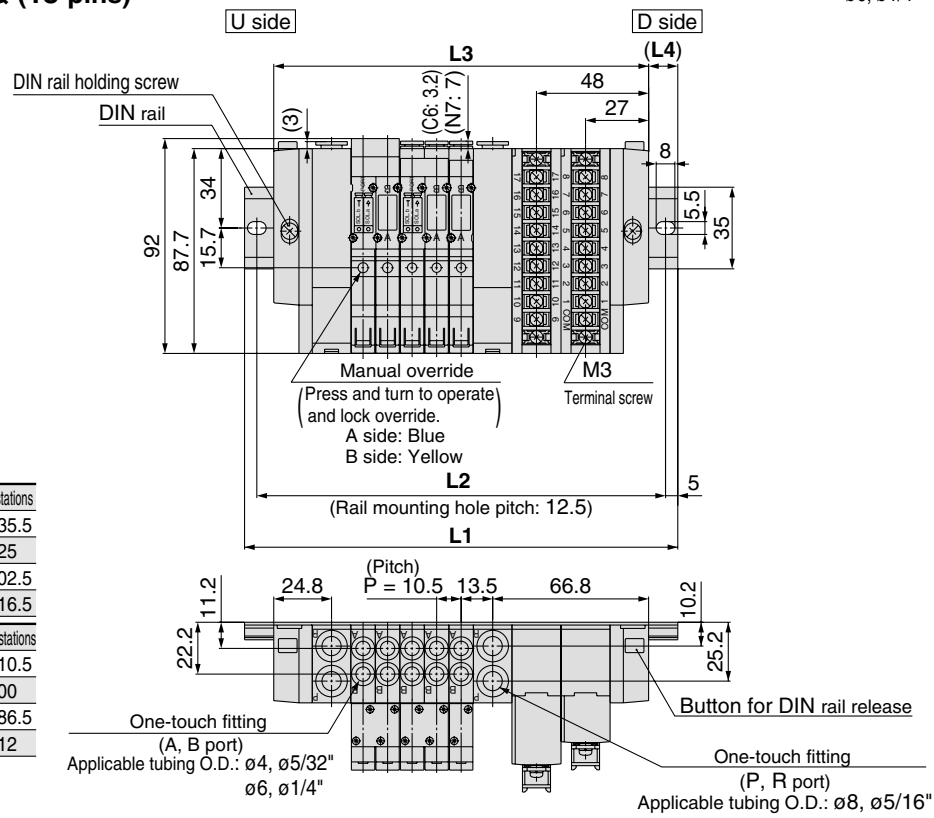

Stations n	2 stations	3	4	5	6	7	8	9 stations
L1	160.5	173	185.5	185.5	198	210.5	223	235.5
L2	150	162.5	175	175	187.5	200	212.5	225
L3	129	139.5	150	160.5	171	181.5	192	202.5
L4	15.5	16.5	17.5	12.5	13.5	14.5	15.5	16.5

Stations n	10 stations	11	12	13	14	15	16	17 stations
L1	248	248	260.5	273	285.5	298	310.5	310.5
L2	237.5	237.5	250	262.5	275	287.5	300	300
L3	213	223.5	234	244.5	255	265.5	276	286.5
L4	17.5	12	13	14	15	16	17	12

SY5000: 18 Pins Terminal Block/Plug-in

SS5Y5-45T1U-Stations D-C4, N3 C6, N7 C8, N9 -Q (18 pins)

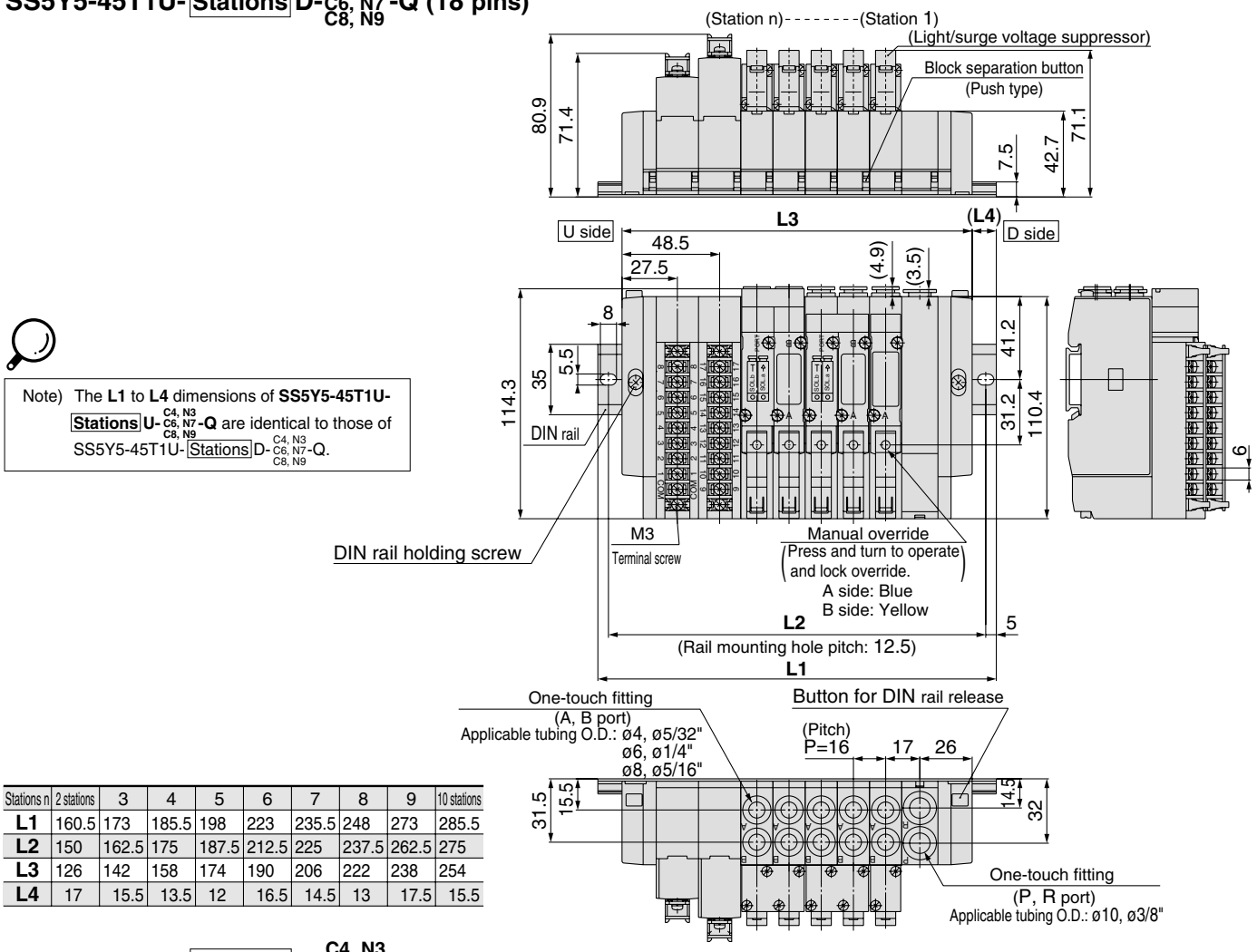

Note) The **L1** to **L4** dimensions of **SS5Y5-45T1U-Stations U-C4, N3 C6, N7 C8, N9 -Q** are identical to those of SS5Y5-45T1U-Stations D-C4, N3 C6, N7 C8, N9 -Q.

Stations n	2 stations	3	4	5	6	7	8	9	10 stations
L1	160.5	173	185.5	198	223	235.5	248	273	285.5
L2	150	162.5	175	187.5	212.5	225	237.5	262.5	275
L3	126	142	158	174	190	206	222	238	254
L4	17	15.5	13.5	12	16.5	14.5	13	17.5	15.5

SS5Y5-45T1U-Stations B-C4, N3 C6, N7 C8, N9 -Q (18 pins)

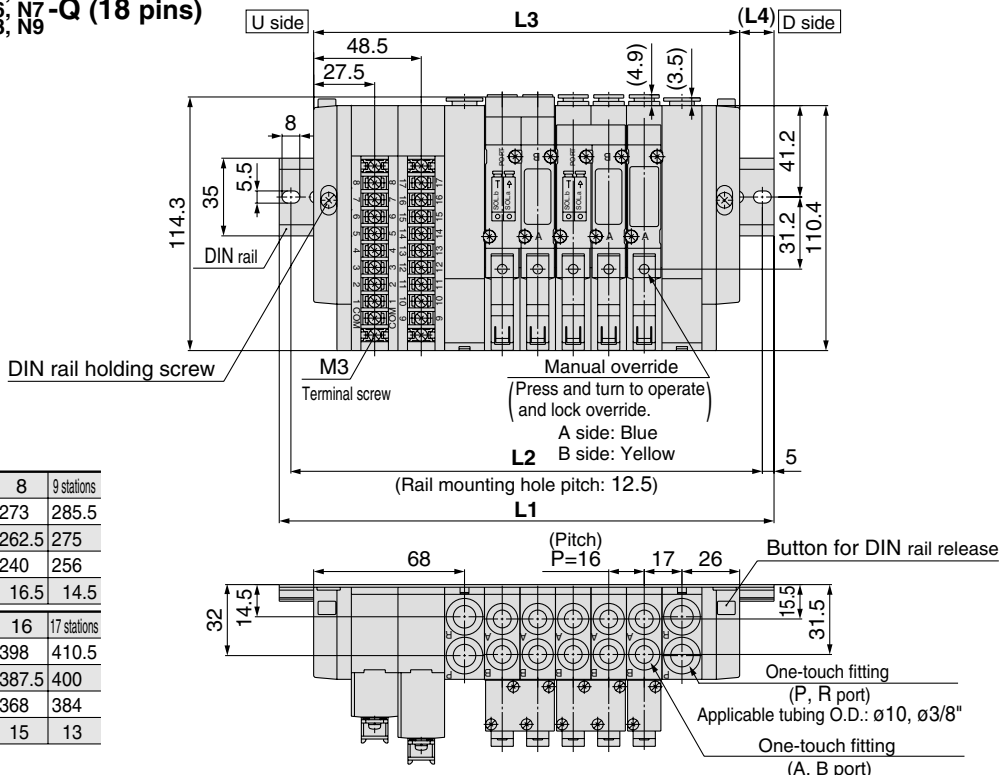

Stations n	2 stations	3	4	5	6	7	8	9 stations
L1	173	185.5	210.5	223	235.5	248	273	285.5
L2	162.5	175	200	212.5	225	237.5	262.5	275
L3	144	160	176	192	208	224	240	256
L4	14.5	12.5	17	15.5	13.5	12	16.5	14.5

Stations n	10 stations	11	12	13	14	15	16	17 stations
L1	298	323	335.5	348	360.5	385.5	398	410.5
L2	287.5	312.5	325	337.5	350	375	387.5	400
L3	272	288	304	320	336	352	368	384
L4	13	17.5	15.5	14	12	16.5	15	13

SY5000: 18 Pins Terminal Block/Plug-in

SS5Y5-45T1D-Stations U-C4, N3 C6, N7 C8, N9-Q (18 pins)

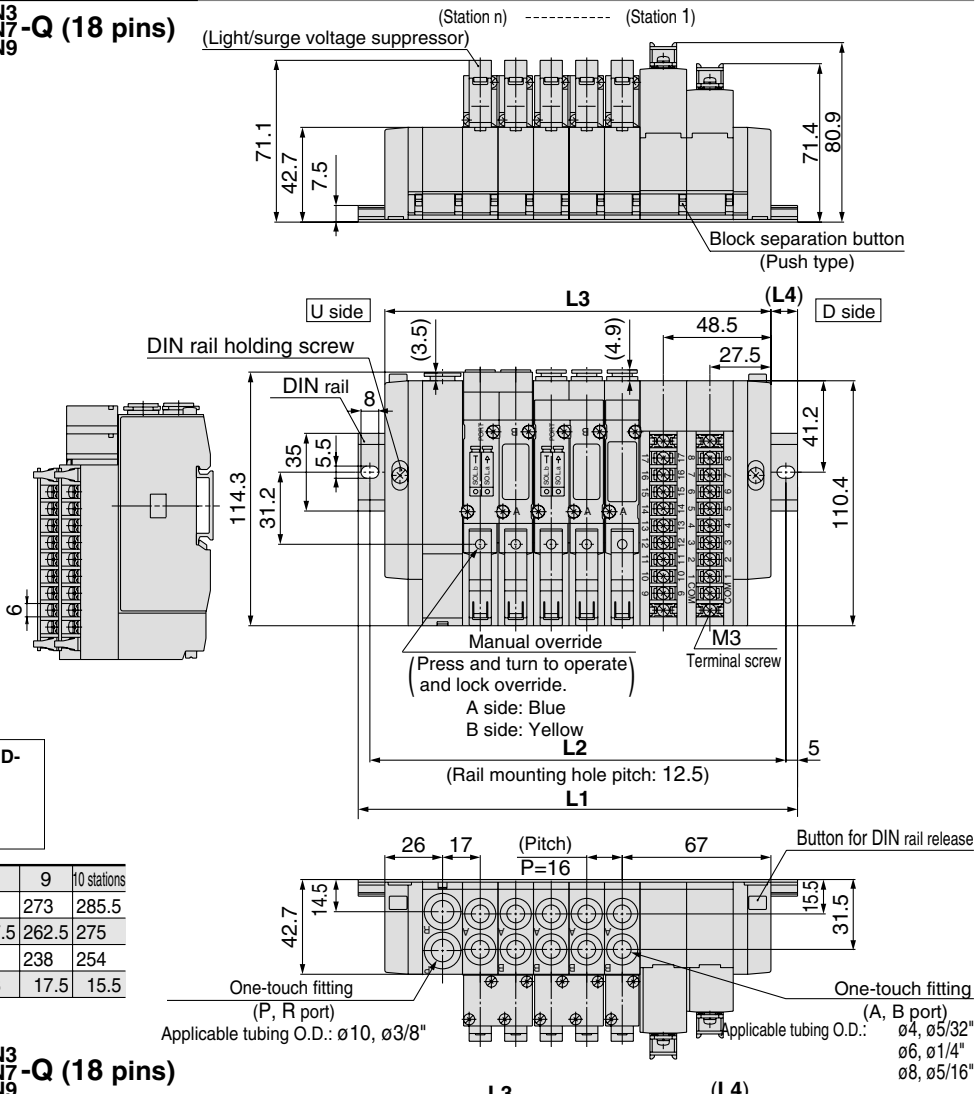

Note) **The L1** to **L4** dimensions of **SS5Y5-45T1D-Stations D-C4, N3 C6, N7 C8, N9** are identical to those of SS5Y5-45T1D-Stations U-C4, N3 C6, N7 C8, N9

Stations n	2 stations	3	4	5	6	7	8	9	10 stations
L1	160.5	173	185.5	198	223	235.5	248	273	285.5
L2	150	162.5	175	187.5	212.5	225	237.5	262.5	275
L3	126	142	158	174	190	206	222	238	254
L4	17	15.5	13.5	12	16.5	14.5	13	17.5	15.5

SS5Y5-45T1D-Stations B-C4, N3 C6, N7 C8, N9-Q (18 pins)

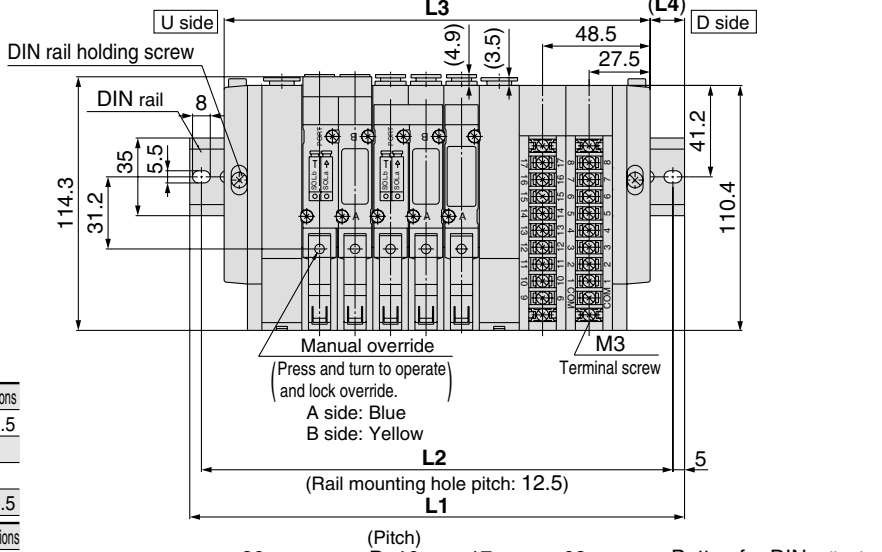

Stations n	2 stations	3	4	5	6	7	8	9 stations
L1	173	185.5	210.5	223	235.5	248	273	285.5
L2	162.5	175	200	212.5	225	237.5	262.5	275
L3	144	160	176	192	208	224	240	256
L4	14.5	12.5	17	15.5	13.5	12	16.5	14.5

Stations n	10 stations	11	12	13	14	15	16	17 stations
L1	298	323	335.5	348	360.5	385.5	398	410.5
L2	287.5	312.5	325	337.5	350	375	387.5	400
L3	272	288	304	320	336	352	368	384
L4	13	17.5	15.5	14	12	16.5	15	13

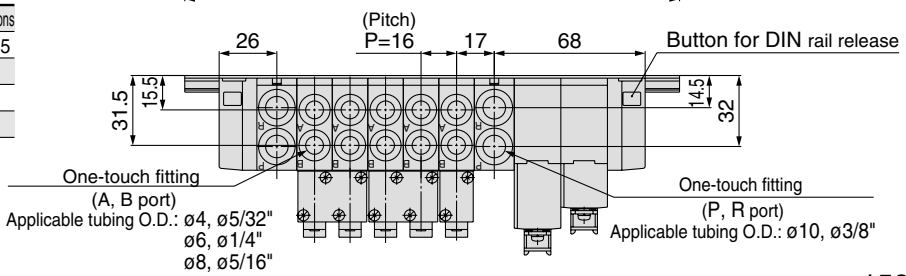

SY3000: PC Wiring System Compatible (Flat ribbon cable/Plug-in)

SS5Y3-45GU-[Stations]D-C4, N3 / C6, N7-Q

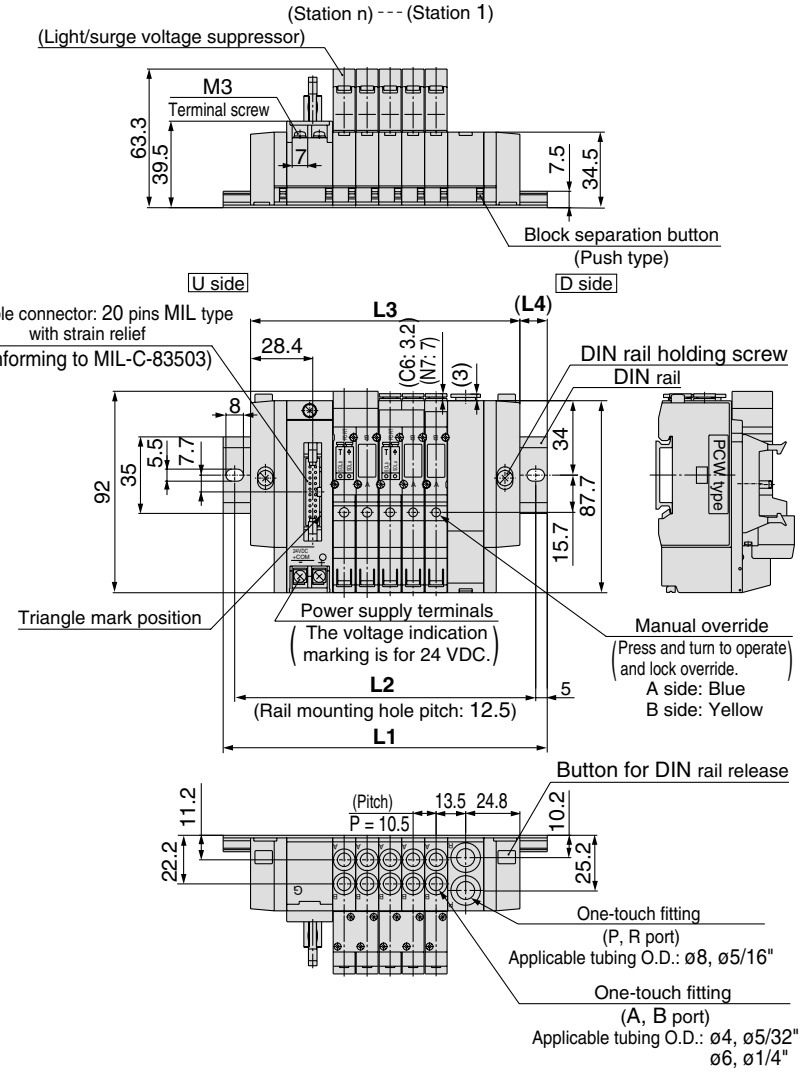

Note) The **L1** to **L4** dimensions of **SS5Y3-45GU-[Stations]U-C4, N3 / C6, N7-Q** are identical to those of SS5Y3-45GU-[Stations]D-C4, N3 / C6, N7-Q.

Stations n	2 stations	3	4	5	6	7	8	9	10 stations
L1	123	135.5	148	148	160.5	173	185.5	198	210.5
L2	112.5	125	137.5	137.5	150	162.5	175	187.5	200
L3	91.5	102	112.5	123	133.5	144	154.5	165	175.5
L4	15.5	16.5	17.5	12.5	13.5	14.5	15.5	16.5	17.5

SS5Y3-45GU-[Stations]B-C4, N3 / C6, N7-Q

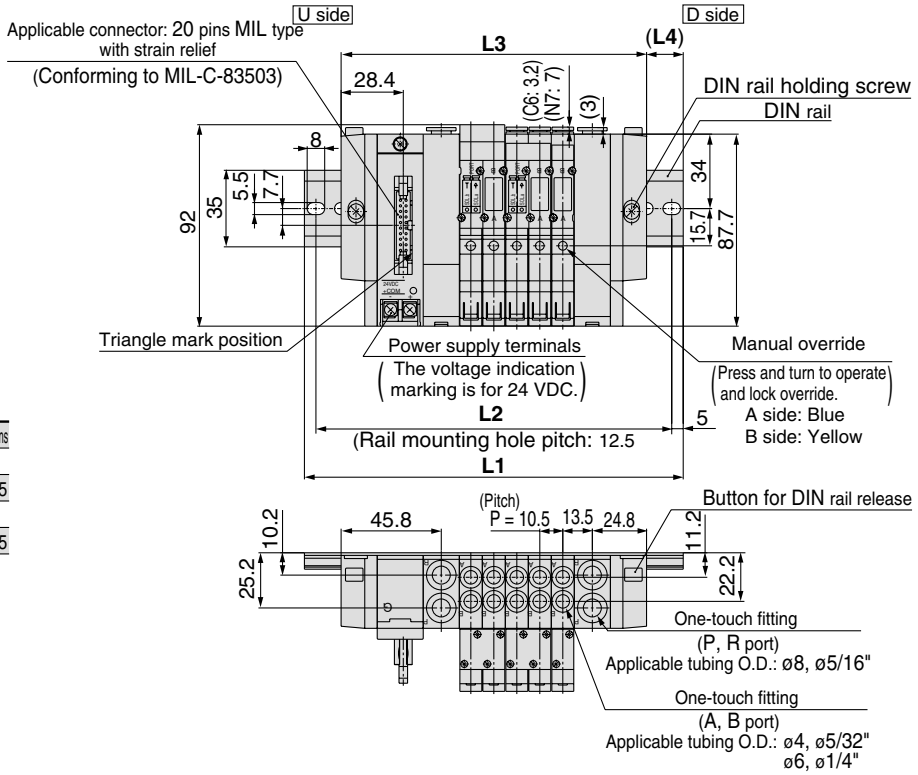

Stations n	2 stations	3	4	5	6	7	8	9	10 stations
L1	135.5	148	160.5	173	185.5	185.5	198	210.5	223
L2	125	137.5	150	162.5	175	175	187.5	200	212.5
L3	108	118.5	129	139.5	150	160.5	171	181.5	192
L4	13.5	14.5	15.5	16.5	17.5	12.5	13.5	14.5	15.5

Stations n	11 stations	12	13	14	15	16 stations
L1	235.5	248	248	260.5	273	285.5
L2	225	237.5	237.5	250	262.5	275
L3	202.5	213	223.5	234	244.5	255
L4	16.5	17.5	12	13	14	15

SY3000: PC Wiring System Compatible (Flat ribbon cable/Plug-in)

SS5Y3-45GD-[Stations]U-$^{C4, N3}_{C6, N7}$-Q

Note) The **L1** to **L4** dimensions of **SS5Y3-45GD-[Stations]D-$^{C4, N3}_{C6, N7}$-Q**are identical to those of SS5Y3-45GD-[Stations]U-$^{C4, N3}_{C6, N7}$-Q.

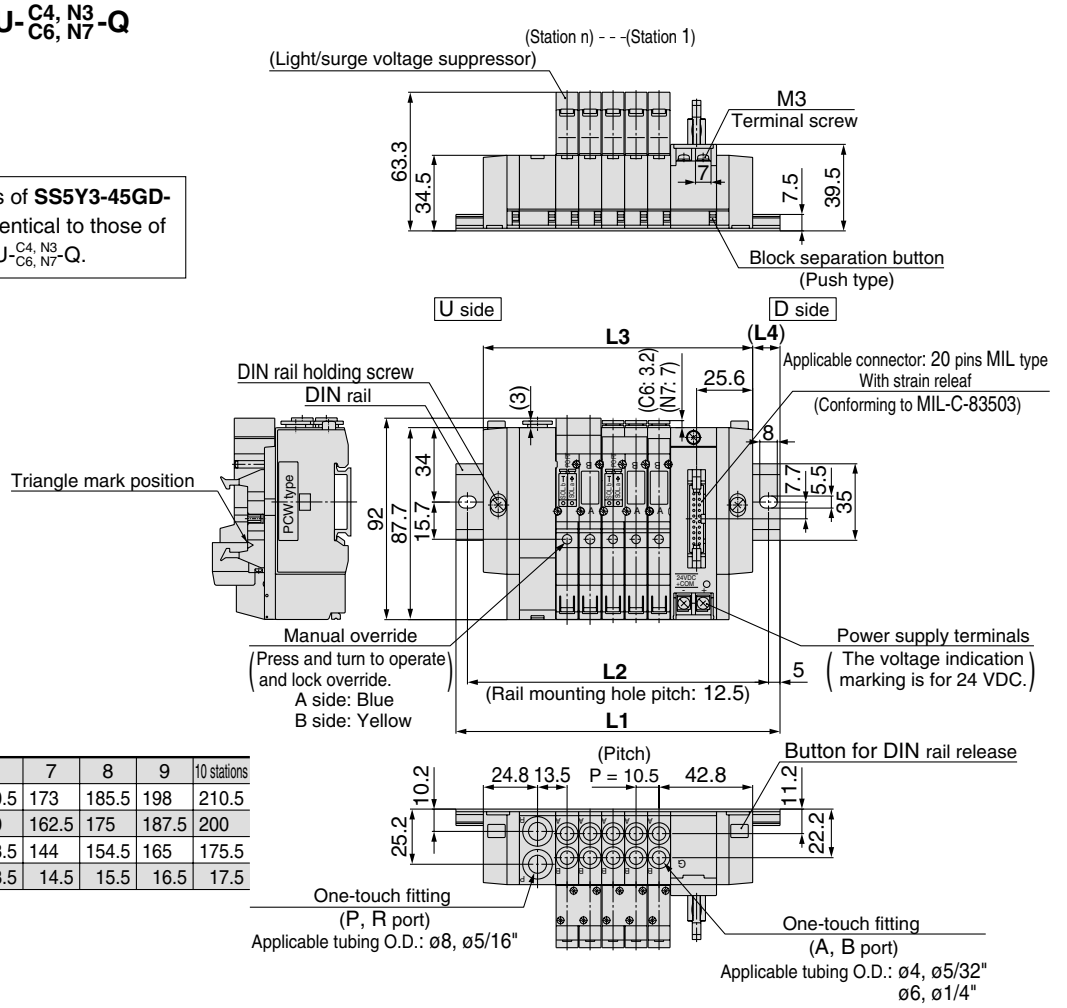

Stations n	2 stations	3	4	5	6	7	8	9	10 stations
L1	123	135.5	148	148	160.5	173	185.5	198	210.5
L2	112.5	125	137.5	137.5	150	162.5	175	187.5	200
L3	91.5	102	112.5	123	133.5	144	154.5	165	175.5
L4	15.5	16.5	17.5	12.5	13.5	14.5	15.5	16.5	17.5

SS5Y3-45GD-[Stations]B-$^{C4, N3}_{C6, N7}$-Q

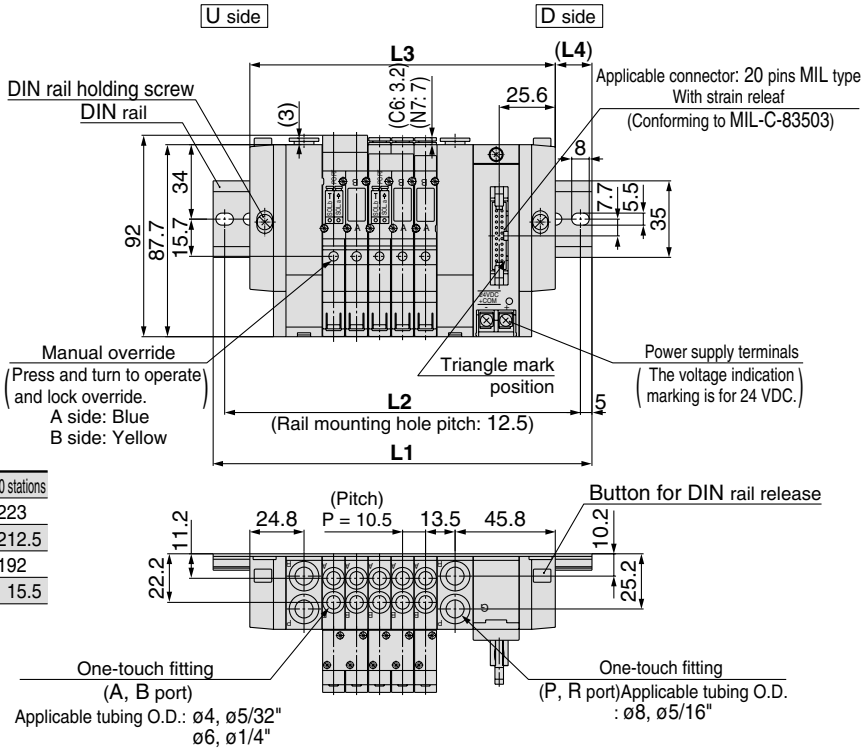

Stations n	2 stations	3	4	5	6	7	8	9	10 stations
L1	135.5	148	160.5	173	185.5	185.5	198	210.5	223
L2	125	137.5	150	162.5	175	175	187.5	200	212.5
L3	108	118.5	129	139.5	150	160.5	171	181.5	192
L4	13.5	14.5	15.5	16.5	17.5	12.5	13.5	14.5	15.5

Stations n	11 stations	12	13	14	15	16 stations
L1	235.5	248	248	260.5	273	285.5
L2	225	237.5	237.5	250	262.5	275
L3	202.5	213	223.5	234	244.5	255
L4	16.5	17.5	12	13	14	15

SY5000: PC Wiring System Compatible (Flat ribbon cable/Plug-in)

SS5Y5-45GU-[Stations] D-[C4, N3 / C6, N7 / C8, N9]-Q

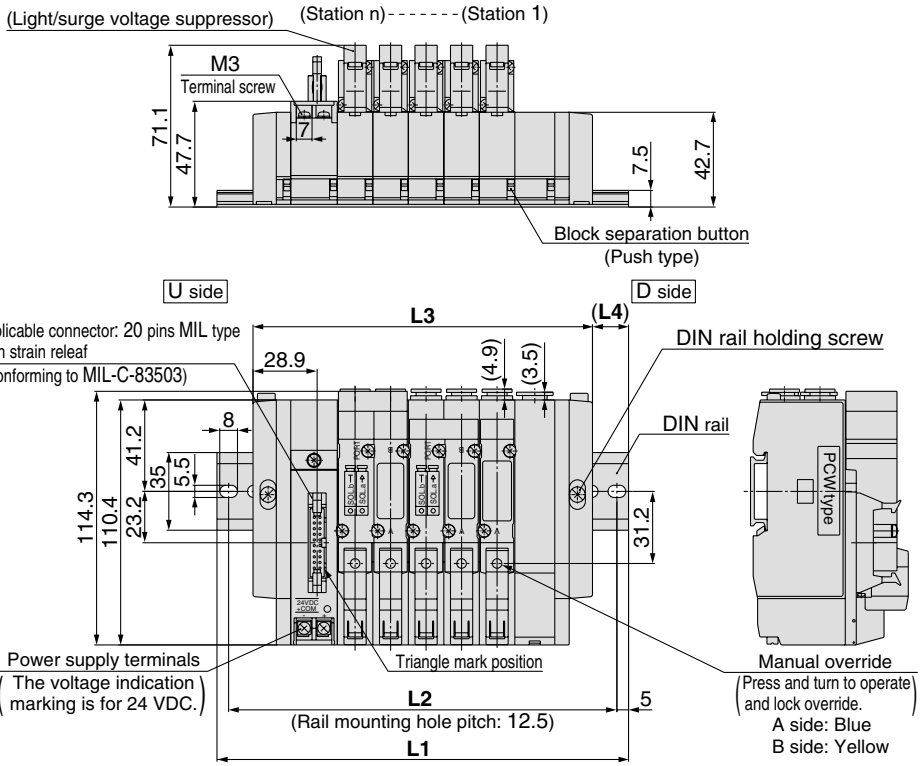

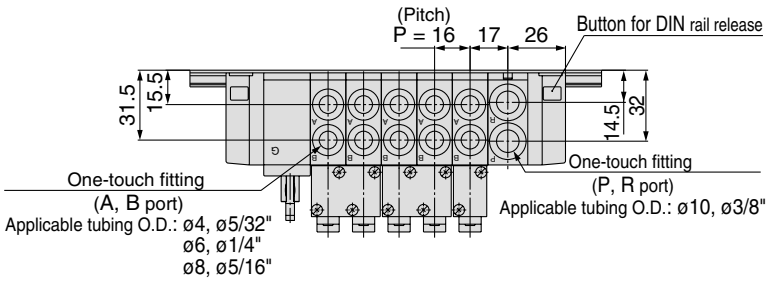

Stations n	2 stations	3	4	5	6	7	8	9	10 stations
L1	135.5	148	160.5	185.5	198	210.5	235.5	248	260.5
L2	125	137.5	150	175	187.5	200	225	237.5	250
L3	105	121	137	153	169	185	201	217	233
L4	15	13.5	11.5	16	14.5	12.5	17	15.5	13.5

SS5Y5-45GU-[Stations] B-[C4, N3 / C6, N7 / C8, N9]-Q

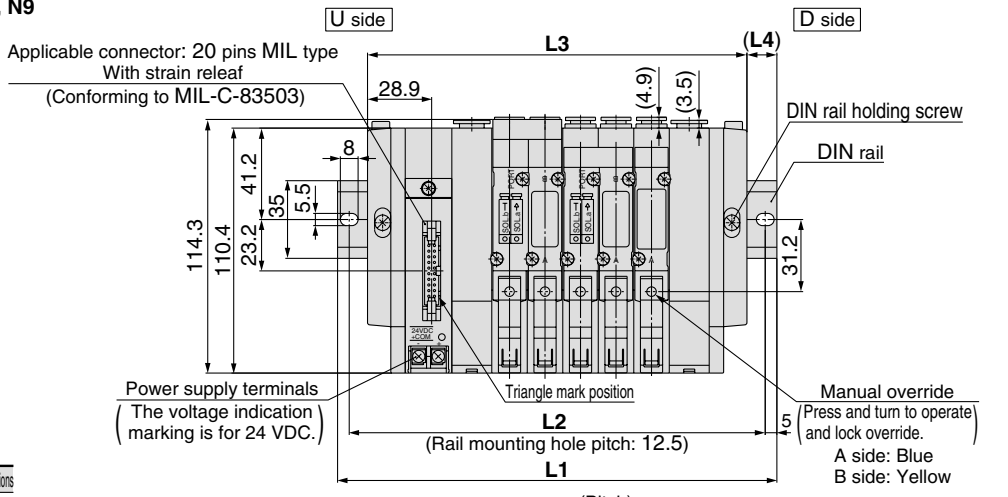

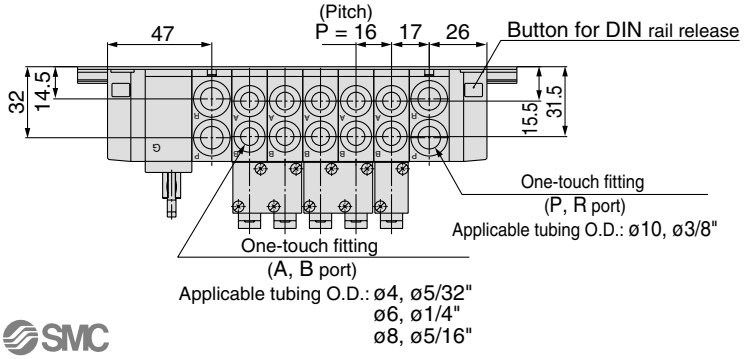

Stations n	2 stations	3	4	5	6	7	8	9	10 stations
L1	148	173	185.5	198	210.5	235.5	248	260.5	285.5
L2	137.5	162.5	175	187.5	200	225	237.5	250	275
L3	123	139	155	171	187	203	219	235	251
L4	12.5	17	15	13.5	11.5	16	14.5	12.5	17

Stations n	11 stations	12	13	14	15	16 stations
L1	298	310.5	323	348	360.5	373
L2	287.5	300	312.5	337.5	350	362.5
L3	267	283	299	315	331	347
L4	15.5	13.5	12	16.5	14.5	13

Note) The **L1** to **L4** dimensions of **SS5Y5-45GU-[Stations]U-[C4, N3 / C6, N7 / C8, N9]-Q** are identical to those of SS5Y5-45GU-[Stations]D-[C4, N3 / C6, N7 / C8, N9]-Q.

SY5000: PC Wiring System Compatible (Flat ribbon cable/Plug-in)

SS5Y5-45GD-[Stations]U-[C4, N3 / C6, N7 / C8, N9]-Q

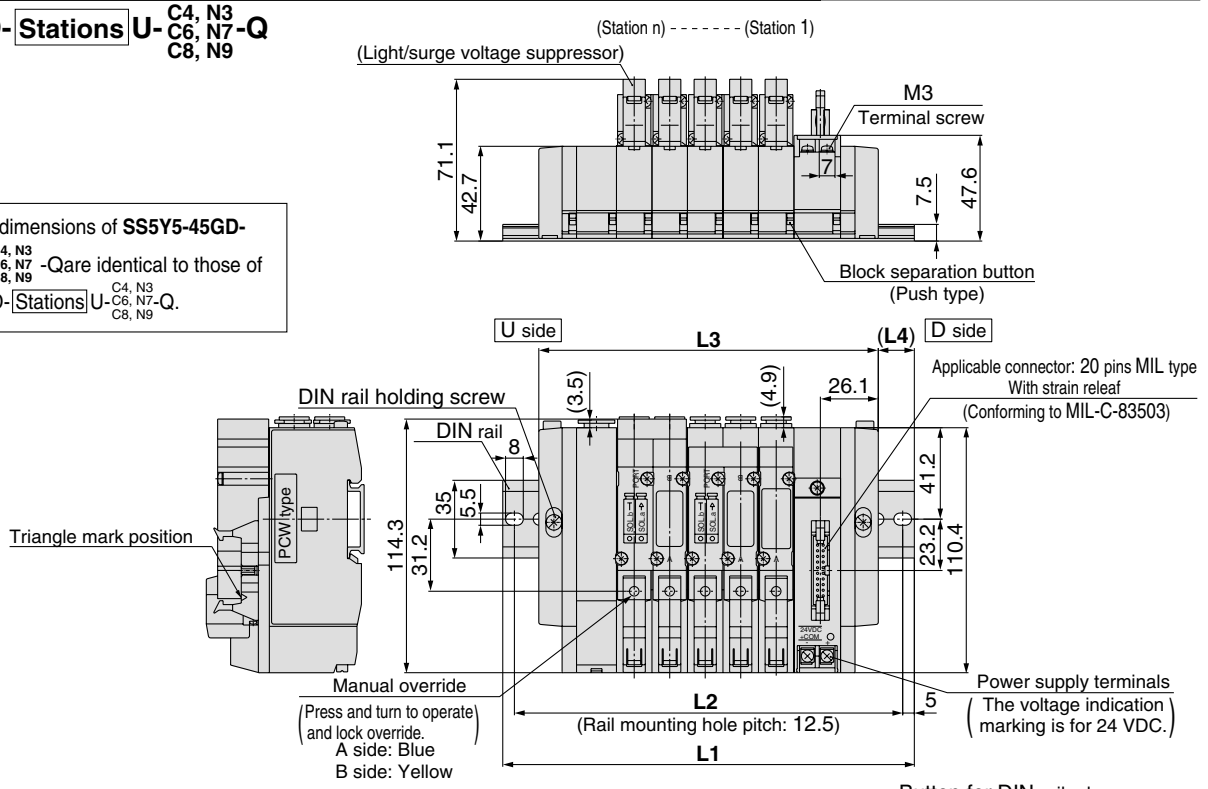

Note) The **L1** to **L4** dimensions of **SS5Y5-45GD-[Stations]D-[C4, N3 / C6, N7 / C8, N9]-Q** are identical to those of SS5Y5-45GD-[Stations]U-[C4, N3 / C6, N7 / C8, N9]-Q.

Stations n	2 stations	3	4	5	6	7	8	9	10 stations
L1	135.5	148	160.5	185.5	198	210.5	235.5	248	260.5
L2	125	137.5	150	175	187.5	200	225	237.5	250
L3	105	121	137	153	169	185	201	217	233
L4	15	13.5	11.5	16	14.5	12.5	17	15.5	13.5

SS5Y5-45GD-[Stations]B-[C4, N3 / C6, N7 / C8, N9]-Q

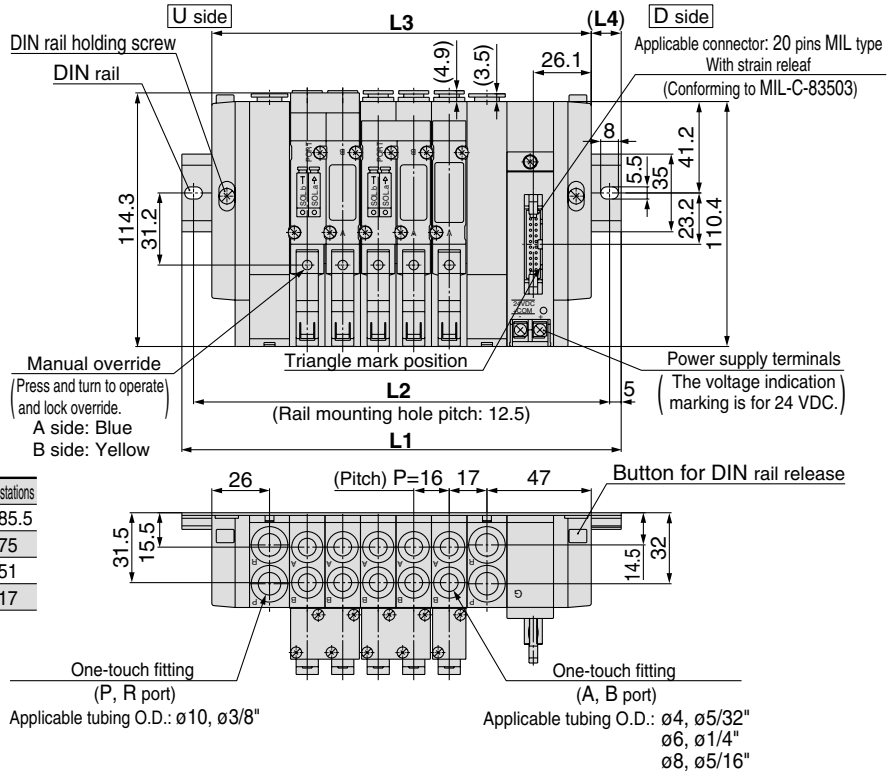

Stations n	2 stations	3	4	5	6	7	8	9	10 stations
L1	148	173	185.5	198	210.5	235.5	248	260.5	285.5
L2	137.5	162.5	175	187.5	200	225	237.5	250	275
L3	123	139	155	171	187	203	219	235	251
L4	12.5	17	15	13.5	11.5	16	14.5	12.5	17

Stations n	11 stations	12	13	14	15	16 stations
L1	298	310.5	323	348	360.5	373
L2	287.5	300	312.5	337.5	350	362.5
L3	267	283	299	315	331	347
L4	15.5	13.5	12	16.5	14.5	13

DIN Rail Manifold Exploded View

Type 45F (D-sub Connector) Manifold

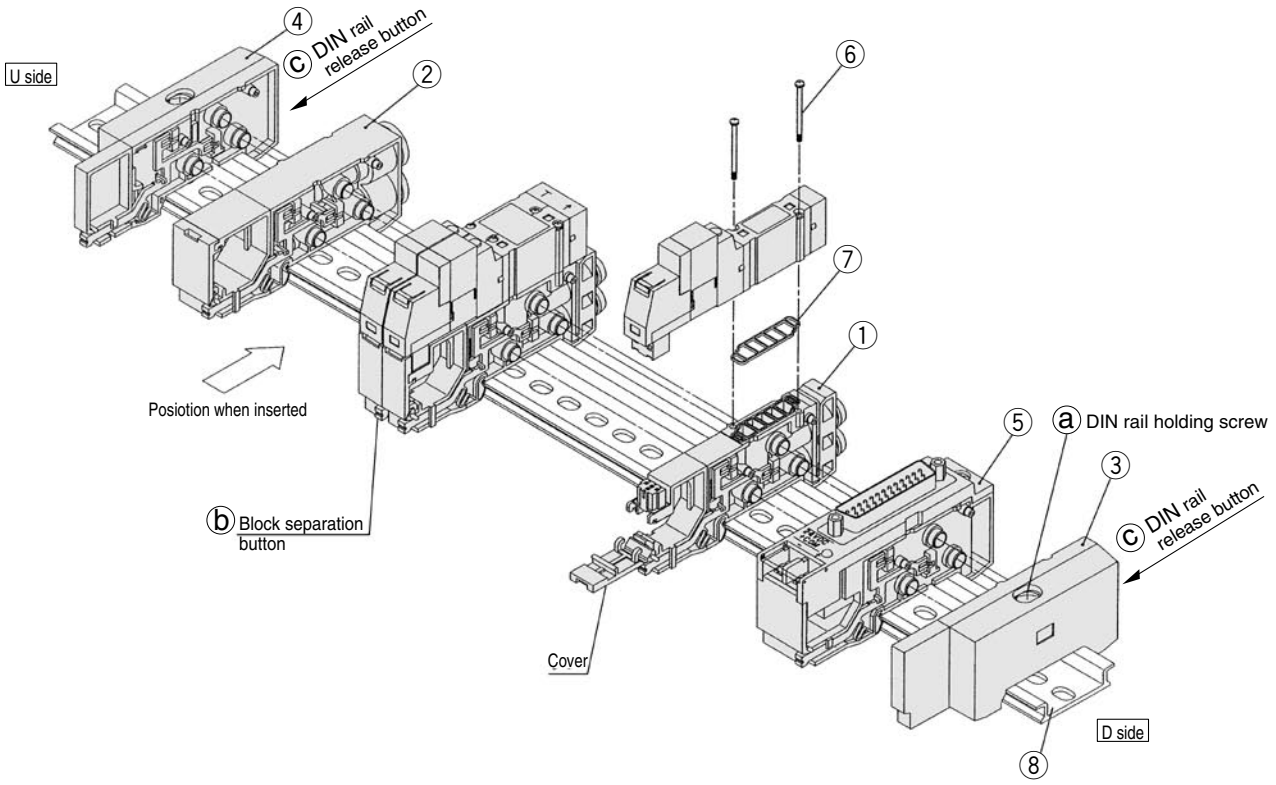

No.	Description	No.		Note	
		SY3000	**SY5000**		
1	Manifold block assembly	Manifold block assembly part number differs according to an attached lead wire assembly based on the connector spec. Select an appropriate part number from the table of manifold block assembly part number shown below. (Gasket 7 is supplied as an accessory.)			
2	SUP/EXH block assembly	(Metric size) SX3000-51-2A (Inch size) SX3000-51-16A	(Metric size) SX5000-51-2A (Inch size) SX5000-51-16A	Metric size SY3000: P, R port with one-touch fitting for ø8 SY5000: P, R port with one-touch fitting for ø10	Inch size With one-touch fitting for ø5/16" With one-touch fitting for ø3/8"
3	End block assembly	SX3000-52-2A-Q	SX5000-52-2A-Q	For D side	
4	End block assembly	SX3000-53-2A-Q	SX5000-53-2A-Q	For U side	
5-1	Connector block assembly (for D-sub connector)	SX3000-64-$^{1A}_{1NA}$	SX5000-64-$^{1A}_{1NA}$	-1A: +COM -1NA: -COM	Note) For 24 VDC
5-2	Connector block assembly (for 26 pins flat cable)	SX3000-64-$^{2A}_{2NA}$-26	SX5000-64-$^{2A}_{2NA}$-26	-2A: +COM -2NA: -COM	
5-3	Connector block assembly (for 20 pins flat cable)	SX3000-64-$^{2A}_{2NA}$-20	SX5000-64-$^{2A}_{2NA}$-20		
5-4	Connector block assembly (for 10 pins flat cable)	SX3000-64-$^{2A}_{2NA}$-10	SX5000-64-$^{2A}_{2NA}$-10		
5-5	Connector block assembly (for 2 to 8 stations (T, T1) terminal block)	SX3000-64-3A	SX5000-64-3A	In common between +COM and –COM.	
5-6	Connector block assembly (for 9 to 17 stations (T1) terminal block)	SX3000-64-8A	SX5000-64-8A		
6	Round head combination screw	SY3000-23-4	M3 x 26, Matt nickel plated		
7	Gasket	SX3000-57-4	SX5000-57-6		
8	DIN rail	VZ1000-11-1-l□		Refer to page 118.	

Note 1) The numbers 5-1 to 4 are for 24 VDC. For 12 VDC, suffix "-12V" to the end of parts number. (Example) SX3000-64-1A-12 V
Note 2) Two manifold block assemblies are necessary for the double, 3 position (Dual body type).

Style of manifold	Manifold block assembly part no.	Note
For 45(N)F (D-sub connector)	SX$^{3}_{5}$000-50-3A-□□-Q	□□: AB port SY3000 (metric size) C4: With one-touch fitting for ø4 C6: With one-touch fitting for ø6 (inch size) N3: With one-touch fittign for ø5/32" N7: With one-touch fitting for ø1/4" A, B port SY5000 (metric size) C4: With one-touch fitting for ø4 C6: With one-touch fitting for ø6 C8: With one-touch fitting for ø8 (inch size) N3: WIth one-touch fitting for ø5/32" N7: With one-touch fitting for ø1/4" N9: With one-touch fitting for ø5/16"
For 45(N)$^{P}_{PG}$ (Flat ribbon cable)	SX$^{3}_{5}$000-50-5A-□□-Q	
For 45G PC Wiring System compatible		
For 45$^{T}_{T1}$ (Terminal block)	SX$^{3}_{5}$000-50-7A-□□-Q	

How to Increase Manifold Bases

1. Loosen DIN rail holding screw ⓐ fixing the manifold base until it begins to turn idly. (While pressing DIN rail releasing buttons ⓒ, at two locations, separate the manifold base from the DIN rail.)
2. Additional bases are to be added to the U side. Press splitting button ⓑ of the manifold block assembly on the U side until button ⓑ locks, and then separate the block assemblies.
3. Separate the connector block assembly in the same manner as 2, and remove the connector mounting screw shown in Fig. 1.
4. Loosen the valve mounting screw on the U side, remove the valve, and take out the receptacle housing. (Refer to Fig. 2.)
5. Insert the common wire (red) of the manifold block assembly to be added into the pin insertion section (N mark) of the receptacle housing that was taken out in 4, mount it on the manifold block, and mount the removed valve.
6. As shown in Fig. 3, mount the additional manifold block assembly on the DIN rail on the U side. Refer to the circuit diagram, and insert the lead wire (black) as shown in Fig. 4.
7. Press the blocks against each other until a click sound is produced, place the lead wire in the manifold block, and close the lid without pinching the lead wire.
8. While lightly holding the blocks together so that there are no gaps between them, secure them to the DIN rail by tightening the DIN rail holding screws ⓐ. ⚠ (Tightening torque: 1.4 N·m)

Fig. 1

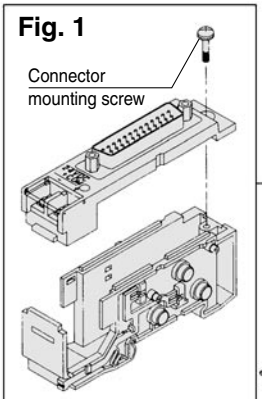

Fig. 2

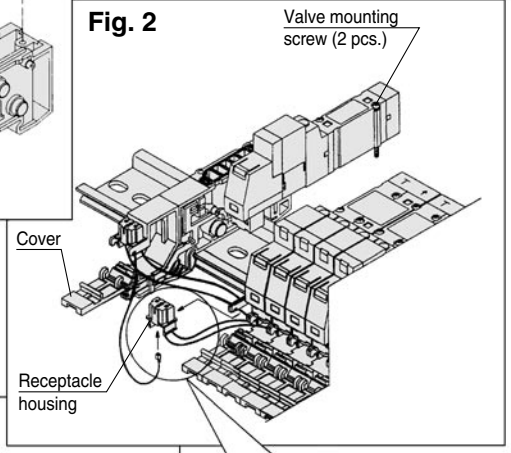

Fig. 3

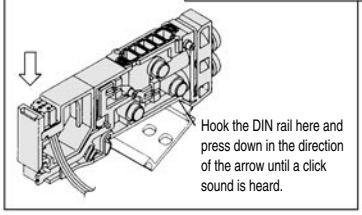

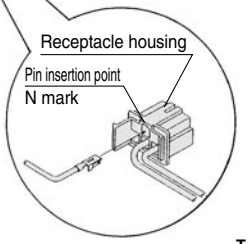

Fig. 4

D-sub connector (45F)

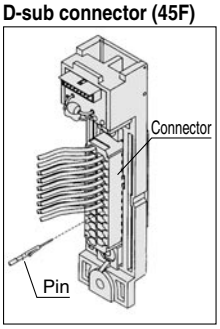

Note)
After inserting pins, lightly pull lead wiresto check that pins are locked.

Flat ribbon cable (45P□)

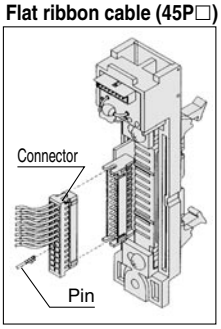

Note)
Insert pins after removing the connectorfrom the main unit. After inserting pins, lightly pull lead wires to check that the pins are locked.

Terminal block (45$^{T}_{T1}$)

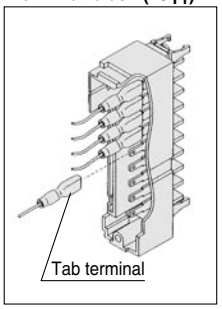

Note)
Insert tab terminals completely.

⚠ Caution

1. Depending on the connector, there is a limit to the number of solenoids that can be used. Manifold bases that can be added cannot exceed the number of usable solenoids.
2. The manifold block assembly mounting position for additional manifold bases is always on the U side, because wires are connected to respective connectors sequentially from the D side.
3. When DIN rail holding screw ⓐ for the end block is not sufficiently tightened during reassembly, air leakage may result. Before supplying air, check that there is no gap between blocks and that the manifold block is firmly fixed to the DIN rail in order to ensure air supply without leakage.

Fitting Assembly

Type 45 manifold permits change in the A and B port sizes by changing the manifold block fitting assembly.
After removing the valve, remove the clip with a screwdriver, etc. For mounting a new fitting assembly, insert it and then insert a clip until it will not come out of the manifold block.

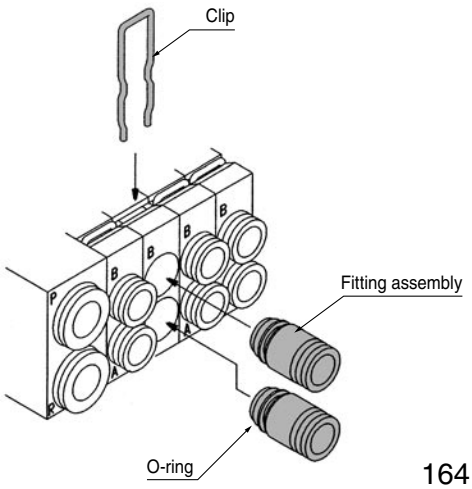

Fitting Assembly Part No.

Metric size

SY3000	One-touch fitting for ø4	VVQ1000-50A-C4
	One-touch fitting for ø6	VVQ1000-50A-C6
SY5000	One-touch fitting for ø4	VVQ1000-51A-C4
	One-touch fitting for ø6	VVQ1000-51A-C6
	One-touch fitting for ø8	VVQ1000-51A-C8

Inch size

SY3000	One-touch fitting for ø5/32"	VVQ1000-50A-N3
	One-touch fitting for ø1/4"	VVQ1000-50A-N7
SY5000	One-touch fitting for ø5/32"	VVQ1000-51A-N3
	One-touch fitting for ø1/4"	VVQ1000-51A-N7
	One-touch fitting for ø5/16"	VVQ1000-51A-N9

Note 1) P and R ports cannot be changed.
Note 2) Use caution that O-rings must be free from scratches and dust. Otherwise, air leakage may result.

Type 45S□

5 Port Solenoid Valve
Series SY3000/5000
Base Mounted
Stacking Type/DIN Rail Mounted

How to Order Manifold

SS5Y 3 – 45S C – 05 U – C6 □ -Q

Series

3	SY3000
5	SY5000

Model

Symbol	Specifications
O	Without SI unit
C	SYSBUS wire system (OMRON Corp.)
Q	DeviceNet and CompoBus/D (OMRON Corp.)
R1	CompoBus/S (16 outputs) compatible (OMRON Corp.)
R2	CompoBus/S (8 outputs) compatible (OMRON Corp.)
T2	SI unit for ASi (8 outputs) Yellow + Black wires
T4	SI unit for ASi (4 outputs) Yellow + Black wires
T5	SI unit for ASi (4 outputs) Yellow wire
V	CC-link System (Mitsubishi Electric Corp.)

∗ Even when the manifold is not equiped with a SI unit, the DIN rail is long enough for future expectancy of mounting a SI unit.

Valve stations

Symbol	Stations	Note
02	2 stations	Single wining spec. (Applicable up to 16 solenoid valves.)
⋮	⋮	
16	16 stations	

∗ This also includes the number of blanking plate assemblies.
∗ Two stations are necessary for the double and 3 position solenoid valves (Dual body type).

SUP/EXH block assembly mounting position

Symbol	Mounting position	Stations
U	U side	2 to 10 stations
D	D side	2 to 10 stations
B	(Both sides)	2 to 16 stations
M	Special specifications	

∗ For special specifications, indicate separately by the manifold specification sheet.

A, B port size

One-touch fitting (Metric size)

Symbol	Port size	Applicable series
C4	One-touch fitting for ø4	SY3000
C6	One-touch fitting for ø6	
M	Mixed	
C4	One-touch fitting for ø4	SY5000
C6	One-touch fitting for ø6	
C8	One-touch fitting for ø8	
M	Mixed	

One-touch fitting (Inch size)

Symbol	Port size	Applicable series
N3	One-touch fitting for ø5/32"	SY3000
N7	One-touch fitting for ø1/4"	
M	Mixed	
N3	One-touch fitting for ø5/32"	SY5000
N7	One-touch fitting for ø1/4"	
N9	One-touch fitting for ø5/16"	
M	Mixed	

∗ In the case of mixed specifications, indicate separately on the manifold specification sheet.

Option

When a longer DIN rail is desired than the specified stations, specify the station number to be required. (Max. 20 stations)

SI Unit Part No.

Symbol	Specifications	For SS5Y□-45S	Symbol	Specifications	For SS5Y□-45S
C	SYSBUS wire system (OMRON Corp.)	EX122-STA1	R2	CompoBus/S (8 outputs) compatible (OMRON Corp.)	EX122-SCS2
Q	DeviceNet and CompoBus/D (OMRON Corp.)	EX122-SDN1	T2	SI unit for ASi (8 outputs) Yellow + Black wires	EX122-SAS2
R1	CompoBus/S (16 outputs) compatible (OMRON Corp.)	EX122-SCS1	T4	SI unit for ASi (4 outputs) Yellow + Black wires	EX122-SAS4
			T5	SI unit for ASi (4 outputs) Yellow wire	EX122-SAS5
			V	CC-Link System (Mitsubishi Electric Corp.)	EX122-SMJ1

How to Order Valve Manifold Assembly (Example)

Example

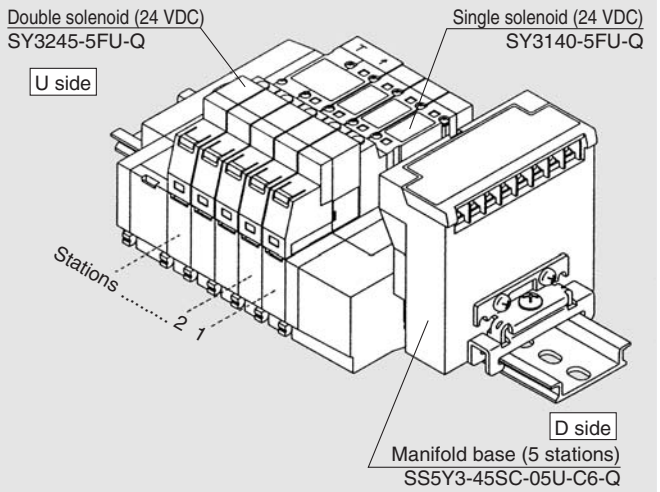

SS5Y3-45SC-05U-C6-Q **1 set (45S with serial unit 5 Stations Manifold base part number)**
∗ **SY3140-5FU-Q** **3 sets (Single solenoid part no.)**
∗ **SY3245-5FU-Q** **1 set (Double solenoid part no.)**

→ The asterisk denotes the symbol for assembly. Prefix it to the part nos. of the solenoid valve, etc.

∗ The valve arrangement is numbered as the 1st. station from D side.
∗ When ordering double solenoid valves/3 position (Dual body type), please keep in mind that they require two manifold stations.
∗ Serial unit is available only for the D-side mounting type.

How to Order Valve

2 position single **SY 3 1 4 0 – 5 FU □ -Q**

Double and 3 position **SY 3 2 4 5 – 5 FU □ -Q**

Series

3	SY3000
5	SY5000

Type of actuation

2	2 position double
3	3 position closed center
4	3 position exhaust center
5	3 position pressure center

Dual body type (Double and 3 position)

Rated voltage

5	24 VDC

Manual override

-	Non-locking push type
D	Push-turn locking slotted type
E	Push-turn locking lever type

■ **The serial transmission system reduces wiring work, while minimising wiring and saving space.**
■ **16 stations max. (Specify a model with more than 9 stations by using a manifold specification sheet.)**

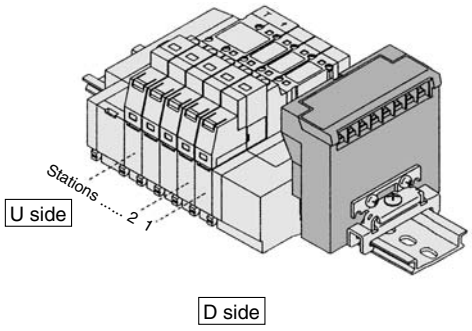

- The total number of stations is tabulated starting from station one on the D side.
- Maximum station: Up to 16 solenoids (16 single solenoids).

Item	Specifications	
External power supply	24 VDC +10%/–5%	
Current consumption (Internal unit)	0.1A	SD, SR1, SR2, SV
	0.3A	SC, SQ

Type C
OMRON Corporation
SYSBUS Wiring System

Name of terminal block, LED

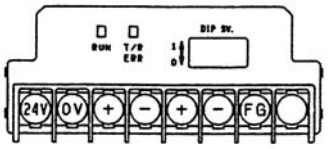

LED description	Detail
RUN	Lights up when transmission is normal and PLC is in operation mode.
T/R ERR	Flashes when transmission is normal; lights up when it is abnormal.

Note

- SYSBUS Wire System
  Master unit: Type C500-RM201
  Type C200H-RM201
- No. of output point: 16 points

Cable wiring

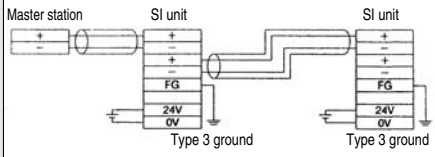

Type Q
DeviceNet

Name of terminal block, LED

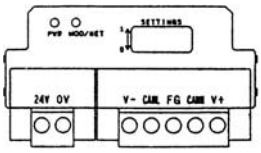

LED description	Detail
POWER	Green light is ON when the circuit is powered.
MOD/NET	Goes out when SI unit is not online or the circuit is not powered.
	Green light is continuously ON when SI unit is on-line and in operation.
	Red light flashes for connection time-out (minor communication error).
	Red light is continuously ON for connection time-out (major communication error) or online impossibility.

Note

- DeviceNet
- OMRON Corporation: CompoBus/D System
  Master station unit: C200HW-DSM21
- No. of output point: 16 points

Cable wiring

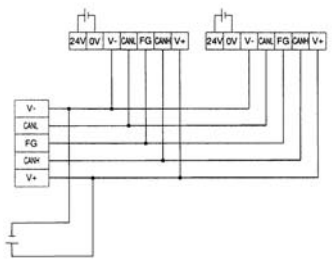

Type R1, R2
OMRON Corporation
CompoBus/S compliant

Name of terminal block, LED

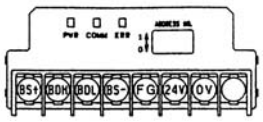

LED description	Detail
POWER	Lights up when transmission is ON; goes out when not powered.
COMM	Lights up for normal communication; goes out for abnormal communication or waiting.
ERR	Lights up for abnormal communication; goes out for normal communication or waiting.

Note

- CompoBus/S System
  Master unit: C200HW-SRM21
  Master unit: COM1-SRM21
- No. of output point: 16 points (Type SR1)
  No. of output point: 8 points (Type SR2)

Cable wiring

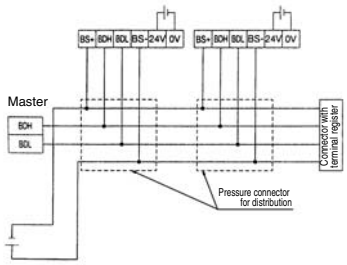

Type V
Mitsubishi Electric Corporation
CC-LINK compliant

Name of terminal block, LED

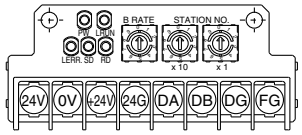

LED description	Detail
PWR	Lights up when transmission power; goes out when not powered.
L RUN	Lights up when receiving normal data.
SD	Lights up when sending data.
RD	Lights up when receiving data.
L ERR.	Lights up for transmission error and setting error; flashes when station or transmission speed settings are changed during operation.

Note

- CC-Link System
  Master unit: AJ61BT11
  Master unit: A1SJ61BT11
  Master unit: AJ61QBT11
  Master unit: A1SJ61QBT11
- No. of output point: 16 points

Cable wiring

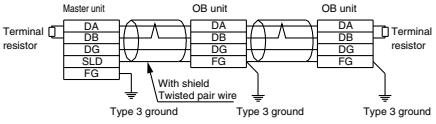

	Type T2	Type T4	Type T5
	AS-i		
Name of terminal block, LED	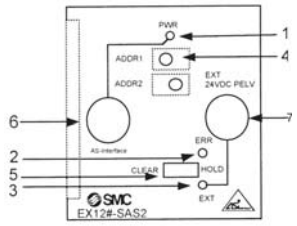	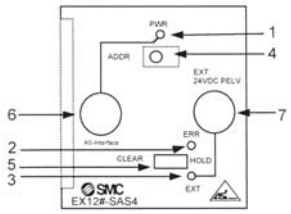	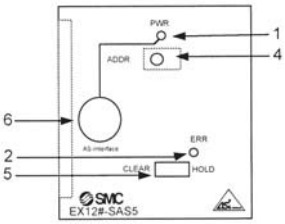

Pos.	Component:	Description:
1	green PWR LED	green LED for AS Interface's power supply (yellow cable)
2	red ERR LED	red LED for communication error (Watch-Dog)
3	green EXT LED (only EX120-SAS2/4)	green LED for valve power supply (24VDC PELV)
4	ADDR socket (ADDR2 only in T2)	Socket for AS-i handheld programming device for address setting ADDR1: for As-i slave 1 / solenoid outputs 0, 1, 2 and 3 ADDR2: for AS-i slave 2 / solenoid outputs 4, 5, 6 and 7
5	CLEAR/HOLD-Switch	CLEAR: all valves are switched OFF in case of communication error. HOLD: all the valves remain in their current ON/OFF position in ase of communication error.
6	AS-interface-Connection for the yellow cable (left)	Connector for communication AS-i yellow ribbon cable.
7	Connection for the black cable (right) (only EX120-SAS2/4)	Connector for external +24VDC power supply cable for the valves.

Note	• free structure: line, tree or star. • no termination resistors needed. • no baud rate settings. • max. bus cable length: 100m (300m wit repeaters).		
	• 8 outputs with additional valve power supply	• 4 outputs with additional valve power supply	• 4 outputs without additional valve power supply
Cable wiring	**Communication connector** External +24VDC valve power supply 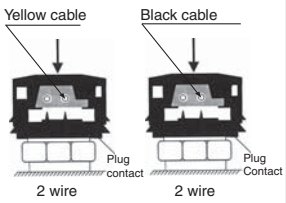	**Communication connector** External +24VDC valve power supply 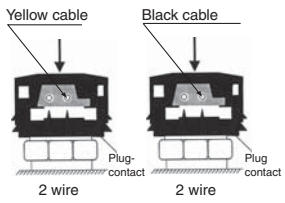	**Communication connector** 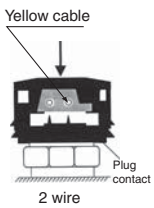

Series SY3000: Serial Transmission Unit/Plug-in

SS5Y3-45S□-Stations U-C4, N3 / C6, N7 -Q (for SI unit types C, Q, R1, R2 and V)

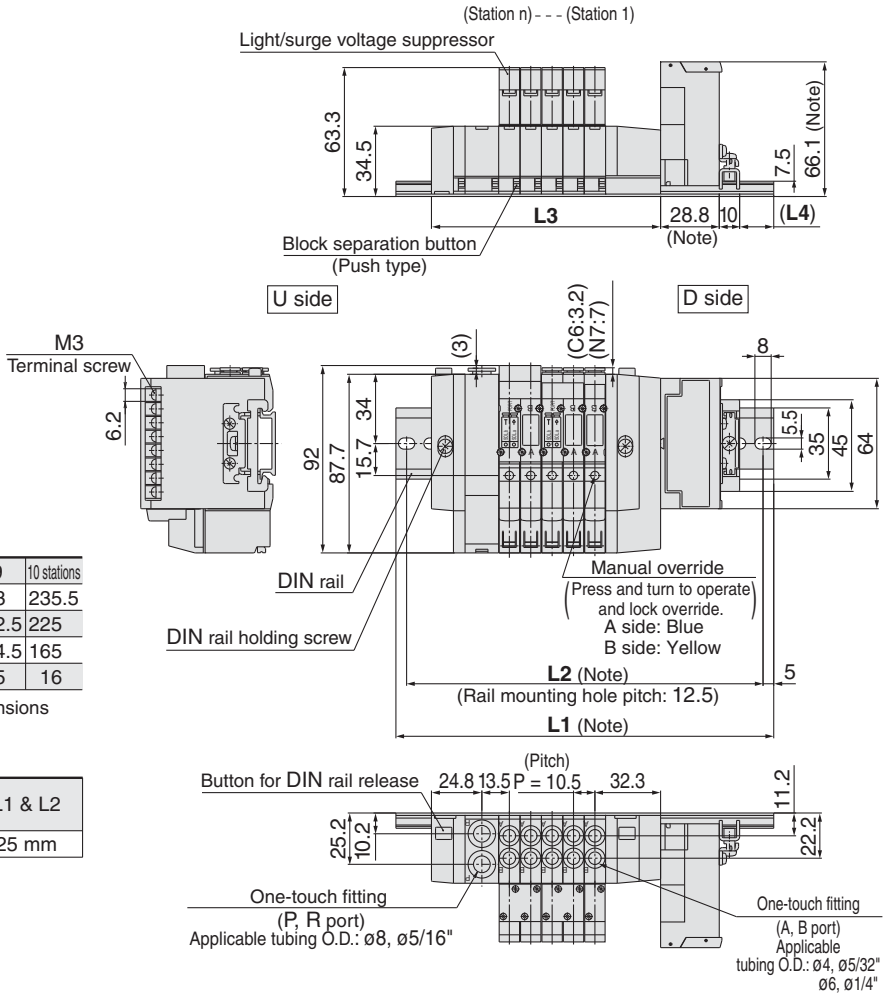

Stations n	2 stations	3	4	5	6	7	8	9	10 stations
L1	148	160.5	173	185.5	185.5	198	210.5	223	235.5
L2	137.5	150	162.5	175	175	187.5	200	212.5	225
L3	81	91.5	102	112.5	123	133.5	144	154.5	165
L4	14.5	15.5	16.5	17.5	12	13	14	15	16

Note) For SI unit types P, T2, T4, and T5, the dimensions below increase by the values shown:

SI Unit type	SI Unit height	SI Unit length	L1 & L2
T2, T4, T5	22.5 mm	24.3 mm	25 mm

SS5Y3-45S□-Stations B-C4, N3 / C6, N7 -Q (for SI unit types C, Q, R1, R2 and V)

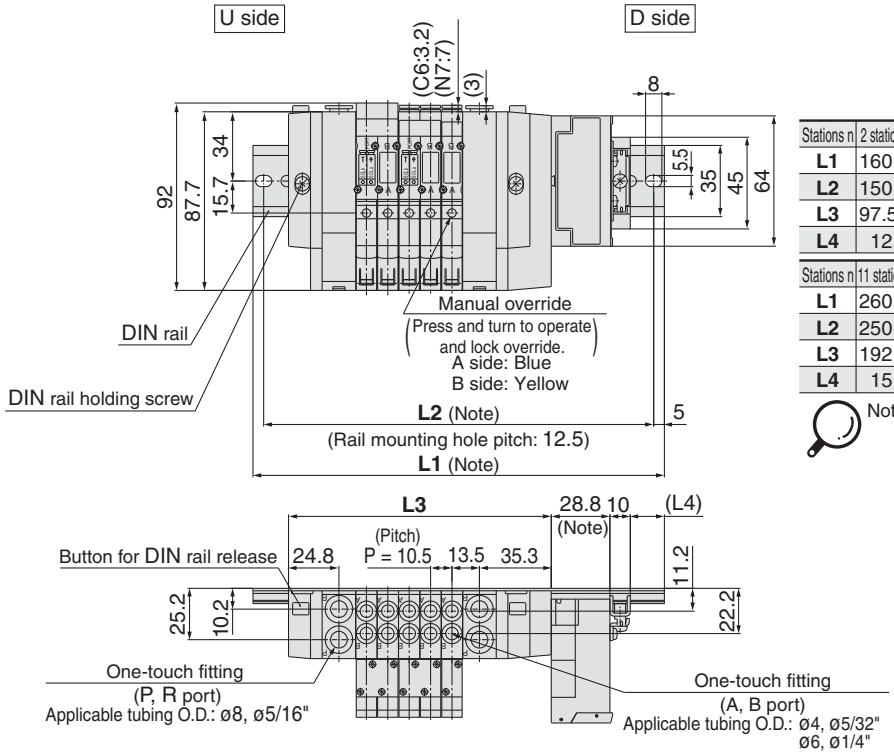

Stations n	2 stations	3	4	5	6	7	8	9	10 stations
L1	160.5	173	185.5	198	210.5	223	223	235.5	248
L2	150	162.5	175	187.5	200	212.5	212.5	225	237.5
L3	97.5	108	118.5	129	139.5	150	160.5	171	181.5
L4	12.5	13.5	14.5	15.5	16.5	17.5	12	13	14

Stations n	11 stations	12	13	14	15	16 stations
L1	260.5	273	285.5	285.5	298	310.5
L2	250	262.5	275	275	287.5	300
L3	192	202.5	213	223.5	234	244.5
L4	15	16	17	12	13	14

Note) For SI unit types P, T2, T4, and T5, the dimensions below increase by the values shown:

SI Unit type	SI Unit height	SI Unit length	L1 & L2
T2, T4, T5	22.5 mm	24.3 mm	25 mm

Series SY5000: Serial Transmission Unit/Plug-in

SS5Y5-45S□-Stations U-C4, N3 / C6, N7 / C8, N9-Q (for SI unit types C, Q, R1, R2 and V)

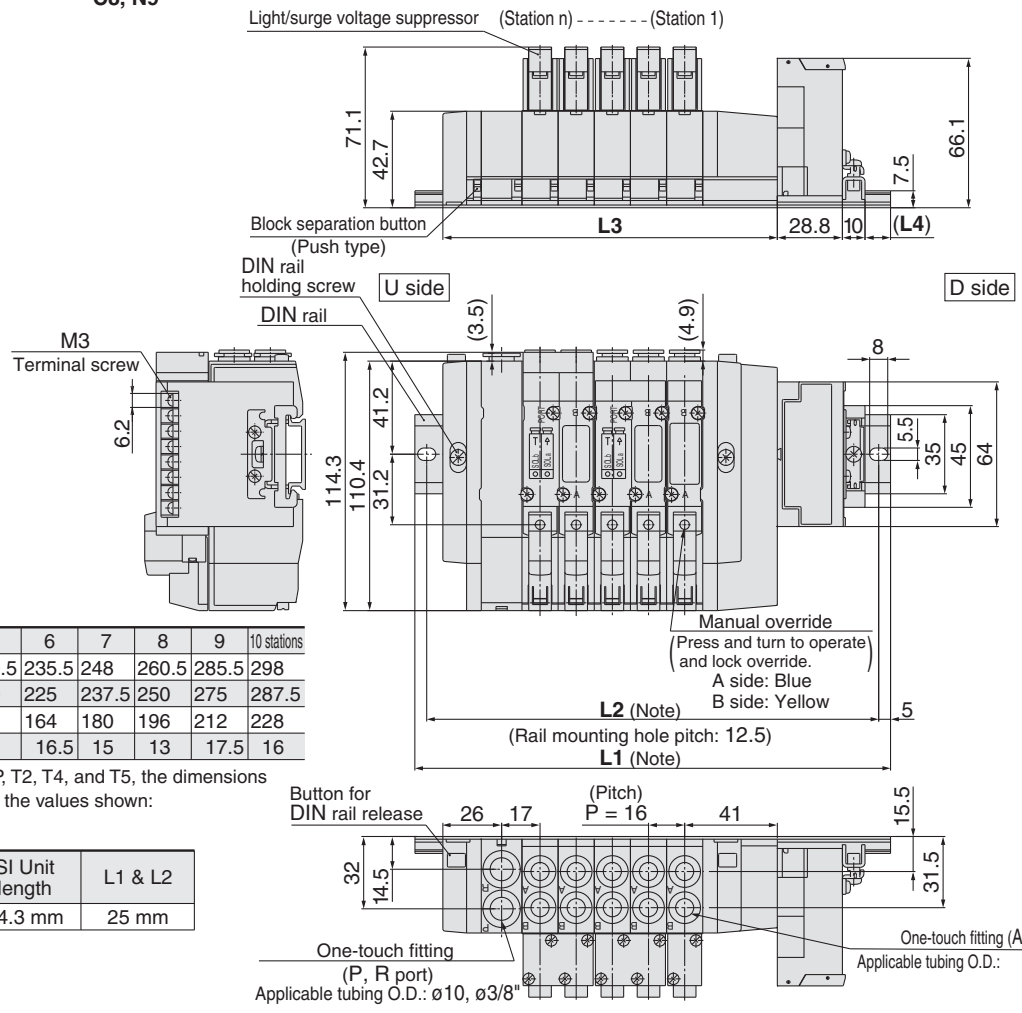

Stations n	2 stations	3	4	5	6	7	8	9	10 stations
L1	173	185.5	198	210.5	235.5	248	260.5	285.5	298
L2	162.5	175	187.5	200	225	237.5	250	275	287.5
L3	100	116	132	148	164	180	196	212	228
L4	17.5	15.5	14	12	16.5	15	13	17.5	16

Note) For SI unit types P, T2, T4, and T5, the dimensions below increase by the values shown:

SI Unit type	SI Unit height	SI Unit length	L1 & L2
T2, T4, T5	22.5 mm	24.3 mm	25 mm

SS5Y5-45S□-Stations B-C4, N3 / C6, N7 / C8, N9-Q (for SI unit types C, Q, R1, R2 and V)

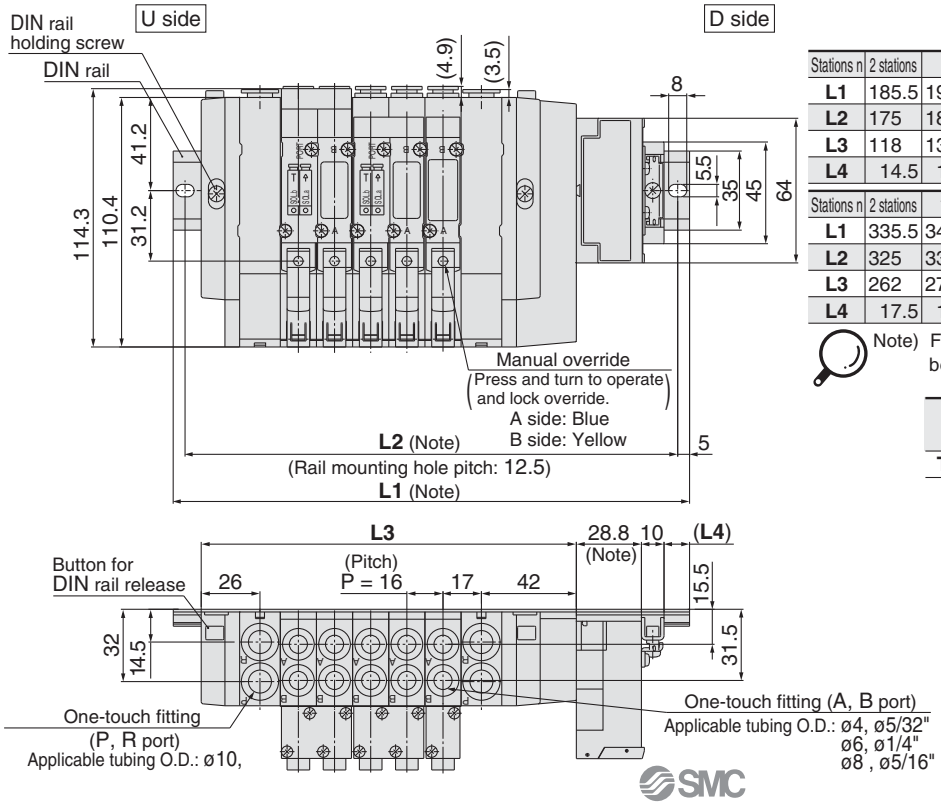

Stations n	2 stations	3	4	5	6	7	8	9	10 stations
L1	185.5	198	223	235.5	248	260.5	285.5	298	310.5
L2	175	187.5	212.5	225	237.5	250	275	287.5	300
L3	118	134	150	166	182	198	214	230	246
L4	14.5	13	17.5	15.5	14	12	16.5	15	13

Stations n	2 stations	12	13	14	15	16 stations
L1	335.5	348	360.5	373	398	410.5
L2	325	337.5	350	362.5	387.5	400
L3	262	278	294	310	326	342
L4	17.5	16	14	12.5	17	15

Note) For SI unit types P, T2, T4, and T5, the dimensions below increase by the values shown:

SI Unit type	SI Unit height	SI Unit length	L1 & L2
T2, T4, T5	22.5 mm	24.3 mm	25 mm

5 Port Solenoid Valve
Series SY3000/5000
Base Mounted
Stacking Type/DIN Rail Mounted
Serial Transmission Unit (Separate type)

Type 45S1□

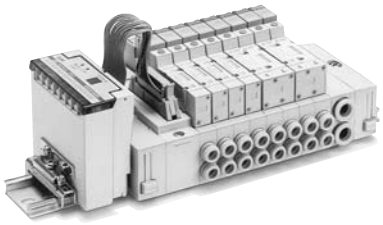

How to Order Manifold

SS5Y 3 – 45S1 C D – 05 U – C4 □ -Q

Series

3	SY3000
5	SY5000

Model

Symbol	Specifications
O	Without SI unit
C	SYSBUS wire system (OMRON Corp.)
Q	DeviceNet and CompoBus/D (OMRON Corp.)
R1	CompoBus/S (16 outputs) compatible (OMRON Corp.)
R2	CompoBus/S (8 outputs) compatible (OMRON Corp.)
T2	SI unit for ASi (8 outputs) Yellow + Black wires
T4	SI unit for ASi (4 outputs) Yellow + Black wires
T5	SI unit for ASi (4 outputs) Yellow wire
V	CC-Link System (Mitsubishi Electric Corp.)

- Even when the manifold is not equipped with a SI unit, the DIN rail length is long enough for future expectancy of mounting a SI unit. When a shorter rail is required (same as type 45□), suffix "0" in the optional blank at the end of part number.
- For SI unit specifications, Refer to pages 166 through to 168.

SI unit mounting position

Symbol	Mounting position
U	U side
D	D side

Valve stations

Symbol	Stations	Note
02	2 stations	Single wiring spec. (Applicable up to 16 solenoid valves.)
⋮	⋮	
16	16 stations	

∗ This also includes the number of blanking plate assemblies.
∗ Two stations are necessary for the double, and 3 position solenoid valves (Dual body type).

SUP/EXH block assembly mounting position

Symbol	Mounting position	Stations
U	U side	2 to 10 stations
D	D side	2 to 10 stations
B	Both sides	2 to 16 stations
M	Special specifications	

∗ For special specifications, indicate separately by the manifold specification sheet.

A, B port size

One-touch fitting (Metric size)

Symbol	Port size	Applicable series
C4	One-touch fitting for ø4	SY3000
C6	One-touch fitting for ø6	
M	Mixed	
C4	One-touch fitting for ø4	SY5000
C6	One-touch fitting for ø6	
C8	One-touch fitting for ø8	
M	Mixed	

One-touch fitting (Inch size)

Symbol	Port size	Applicable series
N3	One-touch fitting for ø 5/32"	SY3000
N7	One-touch fitting for ø 1/4"	
M	Mixed	
N3	One-touch fitting for ø 5/32"	SY5000
N7	One-touch fitting for ø 1/4"	
N9	One-touch fitting for ø 5/16"	
M	Mixed	

∗ In the case of mixed specifications, indicate separately on the manifold specification sheet.

Option

When a longer DIN rail is desired than the specified stations, specify the station number to be required. (Max. 20 stations)

SI Unit Part No.

Symbol	Specifications	For SS5Y□-45S1	Symbol	Specifications:	For SS5Y□-45S1
C	SYSBUS wire system (OMRON Corp.)	EX121-STA1	R2	CompoBus/S (8 outputs) compatible (OMRON Corp.)	EX121-SCS2
Q	DeviceNet and CompoBus/D (OMRON Corp.)	EX121-SDN1	T2	SI unit for ASi (8 outputs) Yellow + Black wires	EX121-SAS2
R1	CompoBus/S (16 outputs) compatible (OMRON Corp.)	EX121-SCS1	T4	SI unit for ASi (4 outputs) Yellow + Black wires	EX121-SAS4
			T5	SI unit for ASi (4 outputs) Yellow wire	EX121-SAS5
			V	CC-Link System (Mitsubishi Electric Corp.)	EX121-SMJ1

∗ For terminal LED descriptions and cable wiring, etc. for each SI unit, refer to pages 166 through 168.

For external pilot specifications and built-in silencer, refer to page 207.

How to Order Valve Manifold Assembly (Example)

Example

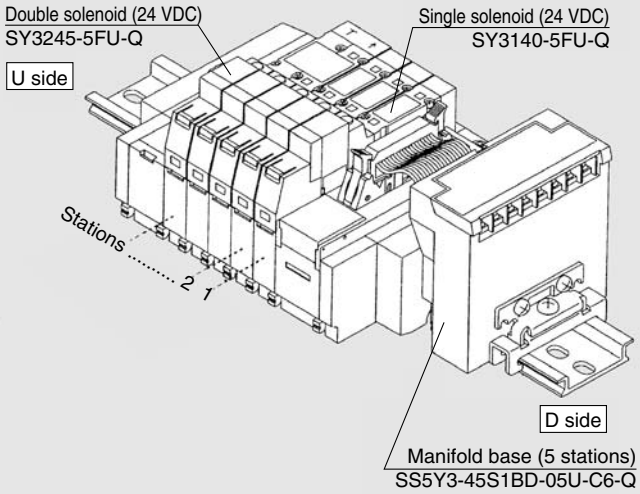

S5Y3-45S1CD-05U-C6-Q	**1 set**	**(Type 45S1 with serial unit 5 station manifold base part no.)**
∗ **SY3140-5FU-Q**	**3 sets**	**(Single solenoid part no.)**
∗ **SY3245-5FU-Q**	**1 set**	**(Double solenoid part no.)**

→The asterisk denotes the symbol for assembly.
Prefix it to the part nos. of the solenoid valve, etc.

- The valve arrangement is numbered as the 1st. station from D side regardless of the mounting position of SI unit.
- When ordering double solenoid valves/3 position (Dual body type), please keep in mind that they require two manifold stations.

How to Order Valve

2 position single **SY 3 1 4 0 — 5 FU □ -Q**

Double and 3 position **SY 3 2 4 5 — 5 FU □ -Q**

Series

3	SY3000
5	SY5000

Type of actuation

2	2 position double
3	3 position closed center
4	3 position exhaust center
5	3 position pressure center

Dual body type (Double and 3 position)

Rated voltage

5	24 VDC

Manual override

-	Non-locking push type
D	Push-turn locking slotted type
E	Push-turn locking lever type

SY3000: Serial Transmission Unit/Plug-in

SS5Y3-45S1□U-[Stations]D-$^{C4, N3}_{C6, N7}$-Q (for SI unit types C, Q, R1, R2 and V)

Note) The **L1** to **L4** dimensions of **SS5Y3-45S1□U-[Stations]U-$^{C4, N3}_{C6, N7}$** are identical to those of SS5Y3-45S1□U-[Stations]D-$^{C4, N3}_{C6, N7}$.

Stations n	2 stations	3	4	5	6	7	8	9	10 stations
L1	160.5	173	185.5	198	198	210.5	223	235.5	248
L2	150	162.5	175	187.5	187.5	200	212.5	225	237.5
L3	91.5	102	112.5	123	133.5	144	154.5	165	175.5
L4	14	15	16	17	12	13	14	15	16

Note) For SI unit types N, P, T2, T4, T5 and Y, the dimensions below increase by the values shown

SI Unit type	SI Unit height	SI Unit length	L1 & L2
T2, T4, T5	22.5 mm	24.3 mm	25 mm

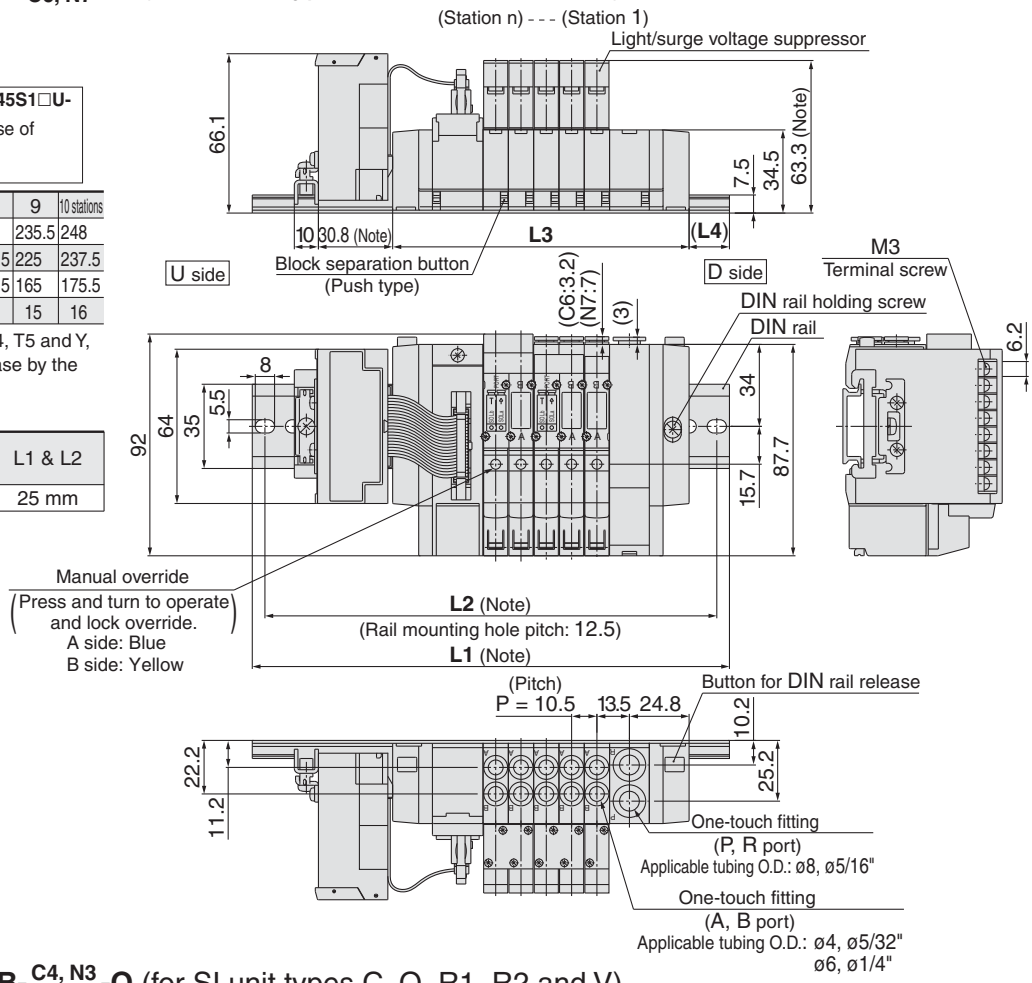

SS5Y3-45S1□U-[Stations]B-$^{C4, N3}_{C6, N7}$-Q (for SI unit types C, Q, R1, R2 and V)

Stations n	2 stations	3	4	5	6	7	8	9	10 stations
L1	173	185.5	198	210.5	223	235.5	235.5	248	260.5
L2	162.5	175	187.5	200	212.5	225	225	237.5	250
L3	108	118.5	129	139.5	150	160.5	171	181.5	192
L4	12	13	14	15	16	17	12	13	14

Stations n	11 stations	12	13	14	15	16 stations
L1	273	285.5	298	298	310.5	323
L2	262.5	275	287.5	287.5	300	312.5
L3	202.5	213	223.5	234	244.5	255
L4	15	16	17	11.5	12.5	13.5

Note) Width of SI unit applicable to "E": Matsushita Electric Works, Ltd. and "G": Rockwell Automation, Inc. (Allen-Bradley) widens to 24.3 mm. For further information, please consult with SMC.

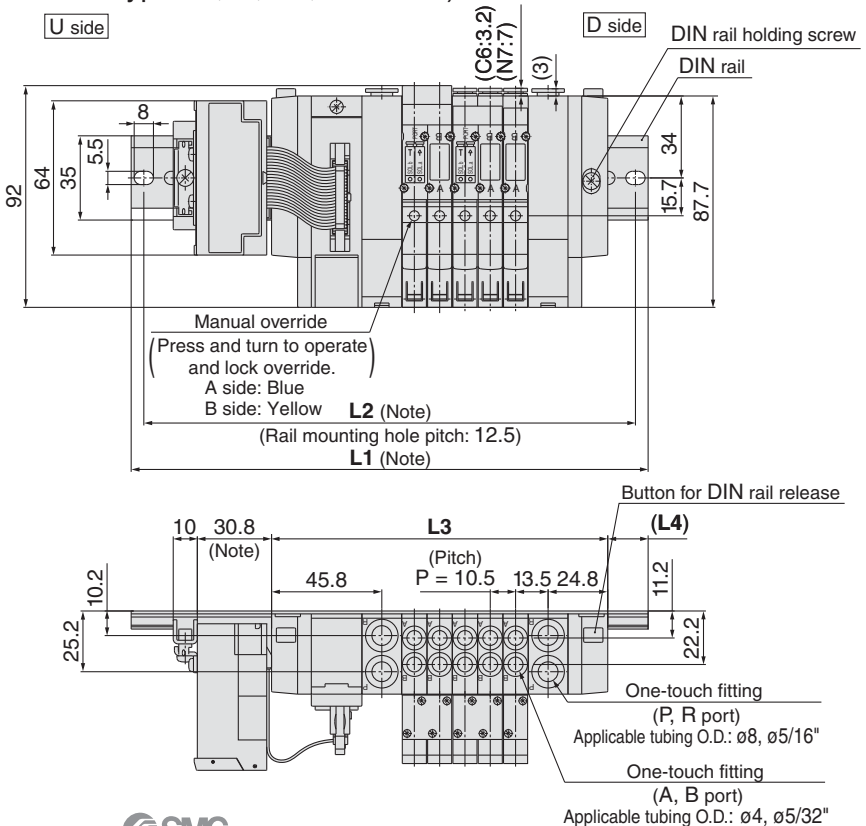

SY3000: Serial Transmission Unit/Plug-in

SS5Y3-45S1□D-[Stations]U-C4, N3 C6, N7-Q (for SI unit types C, Q, R1, R2 and V)

Note) The **L1** to **L4** dimensions of **SS5Y3-45S1□D-[Stations]D-C4, N3 C6, N7** are identical to those of SS5Y3-45S1□D-[Stations]U-C4, N3 C6, N7.

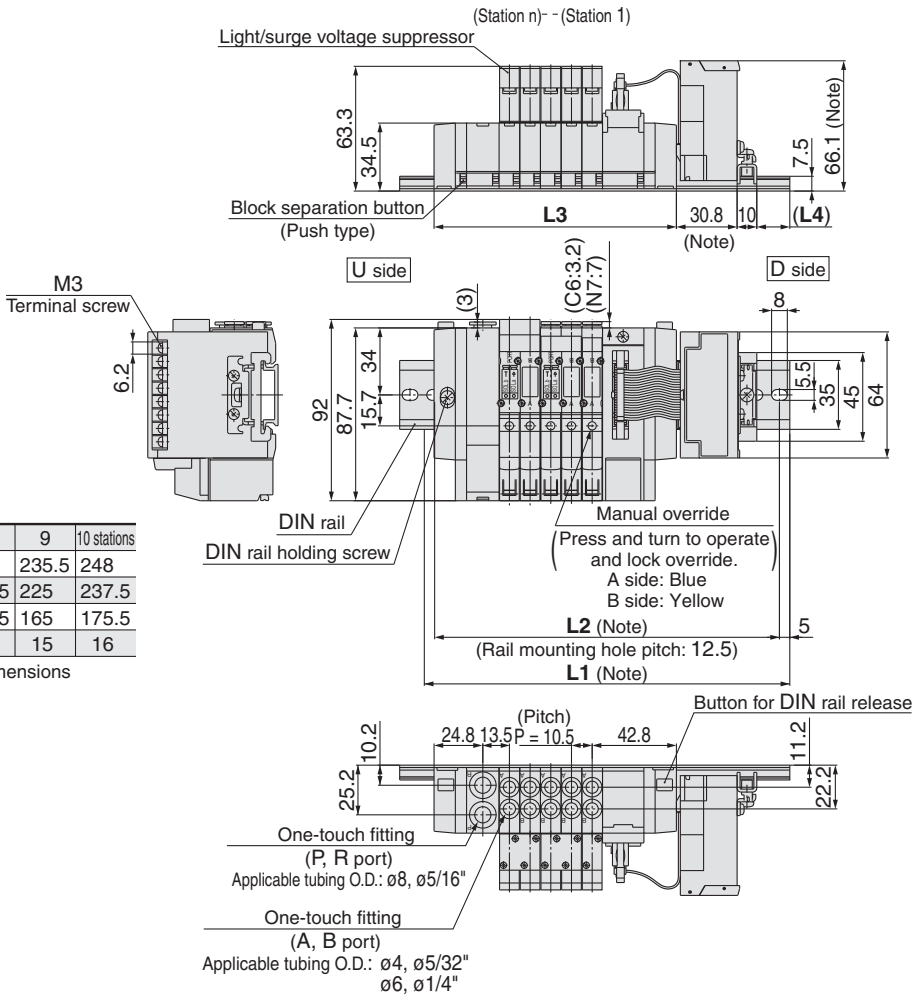

Stations n	2 stations	3	4	5	6	7	8	9	10 stations
L1	160.5	173	185.5	198	198	210.5	223	235.5	248
L2	150	162.5	175	187.5	187.5	200	212.5	225	237.5
L3	91.5	102	112.5	123	133.5	144	154.5	165	175.5
L4	14	15	16	17	12	13	14	15	16

Note) For SI unit types P, T2, T4, and T5, the dimensions below increase by the values shown:

SI Unit type	SI Unit height	SI Unit length	L1 & L2
T2, T4, T5	22.5 mm	24.3 mm	25 mm

SS5Y3-45S1□D-[Stations]B-C4, N3 C6, N7-Q (for SI unit types C, Q, R1, R2 and V)

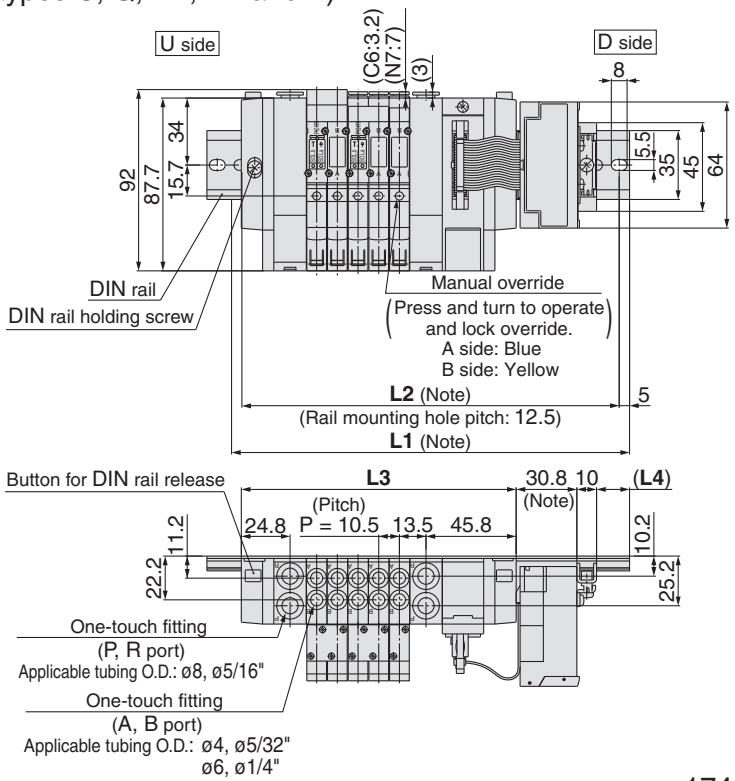

Stations n	2 stations	3	4	5	6	7	8	9	10 stations
L1	173	185.5	198	210.5	223	235.5	235.5	248	260.5
L2	162.5	175	187.5	200	212.5	225	225	237.5	250
L3	108	118.5	129	139.5	150	160.5	171	181.5	192
L4	12	13	14	15	16	17	12	13	14

Stations n	11 stations	12	13	14	15	16 stations
L1	273	285.5	298	298	310.5	323
L2	262.5	275	287.5	287.5	300	312.5
L3	202.5	213	223.5	234	244.5	255
L4	15	16	17	11.5	12.5	13.5

Note) For SI unit types P, T2, T4, and T5, the dimensions below increase by the values shown:

SI Unit type	SI Unit height	SI Unit length	L1 & L2
T2, T4, T5	22.5 mm	24.3 mm	25 mm

SY5000: Serial Transmission Unit/Plug-in

SS5Y5-45S1□U-Stations D-C4, N3 C6, N7 C8, N9-Q (for SI unit types C, Q, R1, R2 and V)

Note) The **L1** to **L4** dimensions of **SS5Y5-45S1□U-Stations U-C4, N3 C6, N7 C8, N9** are identical to those of SS5Y5-45S1□U-Stations D-C4, N3 C6, N7 C8, N9.

Stations n	2 stations	3	4	5	6	7	8	9	10 stations
L1	173	185.5	210.5	223	235.5	260.5	273	285.5	298
L2	162.5	175	200	212.5	225	250	262.5	275	287.5
L3	105	121	137	153	169	185	201	217	233
L4	13.5	12	16.5	14.5	13	17.5	15.5	14	12

Note) For SI unit types N, P, T2, T4, T5 and Y, the dimensions below increase by the values shown:

SI Unit type	SI Unit height	SI Unit length	L1 & L2
T2, T4, T5	22.5 mm	24.3 mm	25 mm

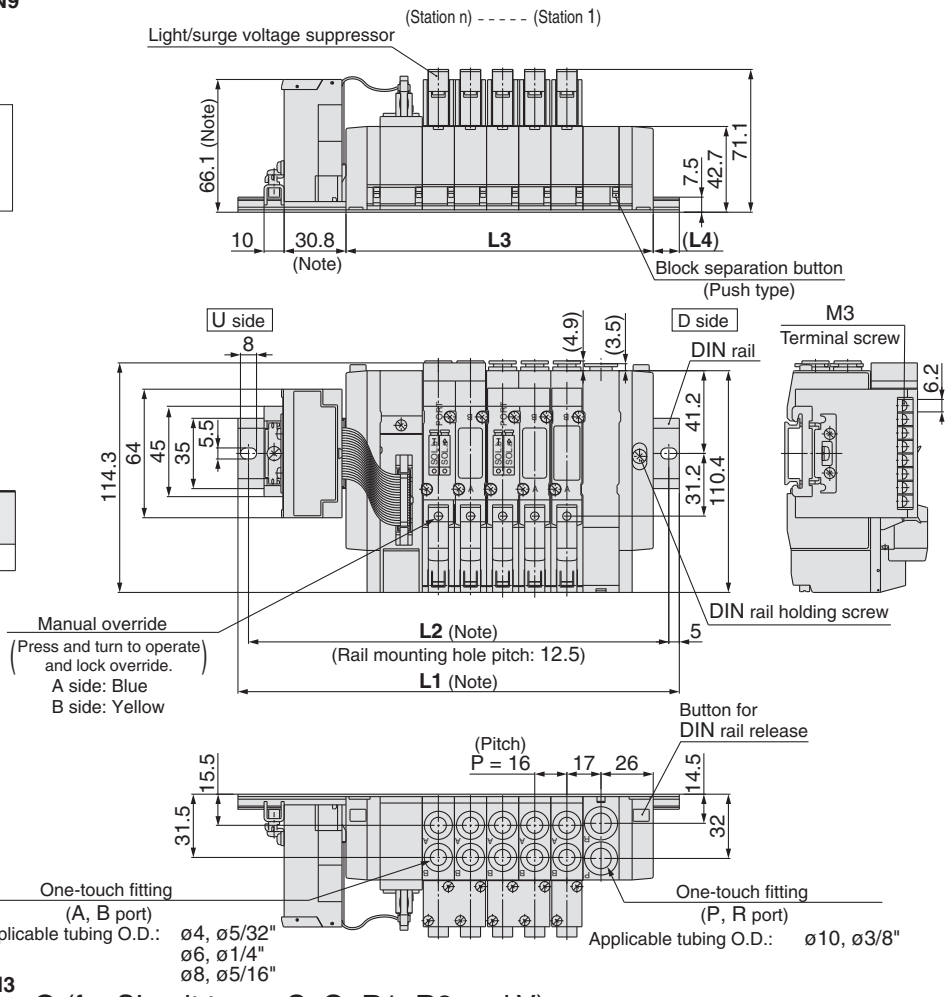

SS5Y5-45S1□U-Stations B-C4, N3 C6, N7 C8, N9-Q (for SI unit types C, Q, R1, R2 and V)

Stations n	2 stations	3	4	5	6	7	8	9	10 stations
L1	198	210.5	223	235.5	260.5	273	285.5	310.5	323
L2	187.5	200	212.5	225	250	262.5	275	300	312.5
L3	123	139	155	171	187	203	219	235	251
L4	17	15.5	13.5	12	16.5	14.5	13	17.5	15.5

Stations n	11 stations	12	13	14	15	16 stations
L1	335.5	348	373	385.5	398	410.5
L2	325	337.5	362.5	375	387.5	400
L3	267	283	299	315	331	347
L4	14	12	16.5	15	13	11.5

Note) For SI unit types N, P, T2, T4, T5 and Y, the dimensions below increase by the values shown:

SI Unit type	SI Unit height	SI Unit length	L1 & L2
T2, T4, T5	22.5 mm	24.3 mm	25 mm

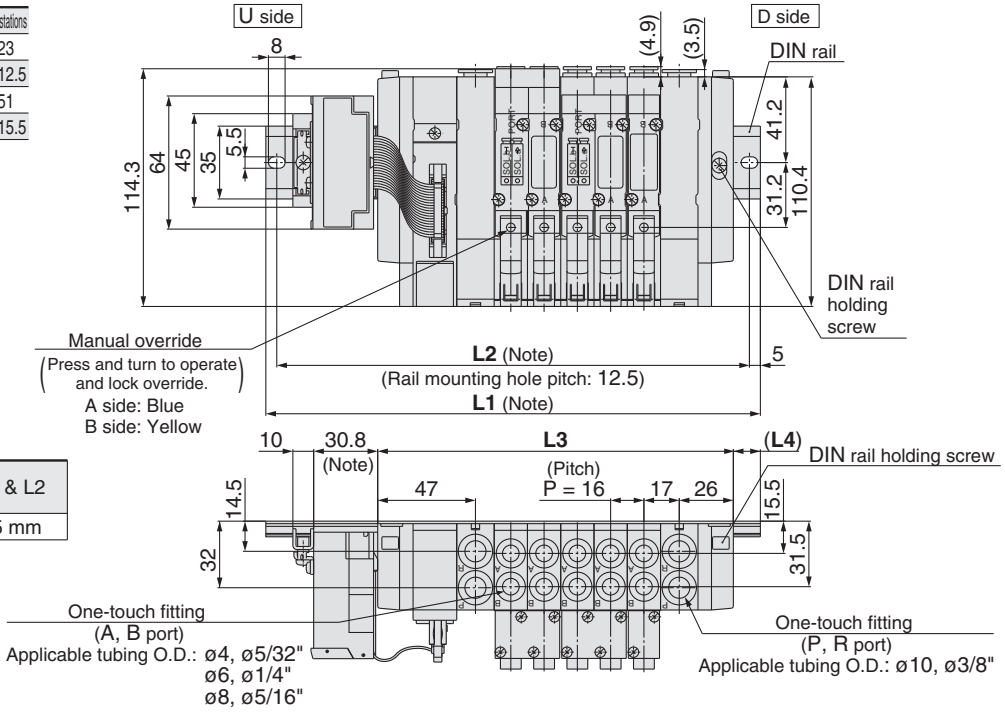

SY5000: Serial Transmission Unit/Plug-in

SS5Y5-45S1□D-Stations U-C4, N3 C6, N7 C8, N9 -Q (for SI unit types C, Q, R1, R2 and V)

Stations n	2 stations	3	4	5	6	7	8	9	10 stations
L1	173	185.5	210.5	223	235.5	260.5	273	285.5	298
L2	162.5	175	200	212.5	225	250	262.5	275	287.5
L3	105	121	137	153	169	185	201	217	233
L4	13.5	12	16.5	14.5	13	17.5	15.5	14	12

Note) For SI unit types N, P, T2, T4, T5 and Y, the dimensions below increase by the values shown:

SI Unit type	SI Unit height	SI Unit length	L1 & L2
T2, T4, T5	22.5 mm	24.3 mm	25 mm

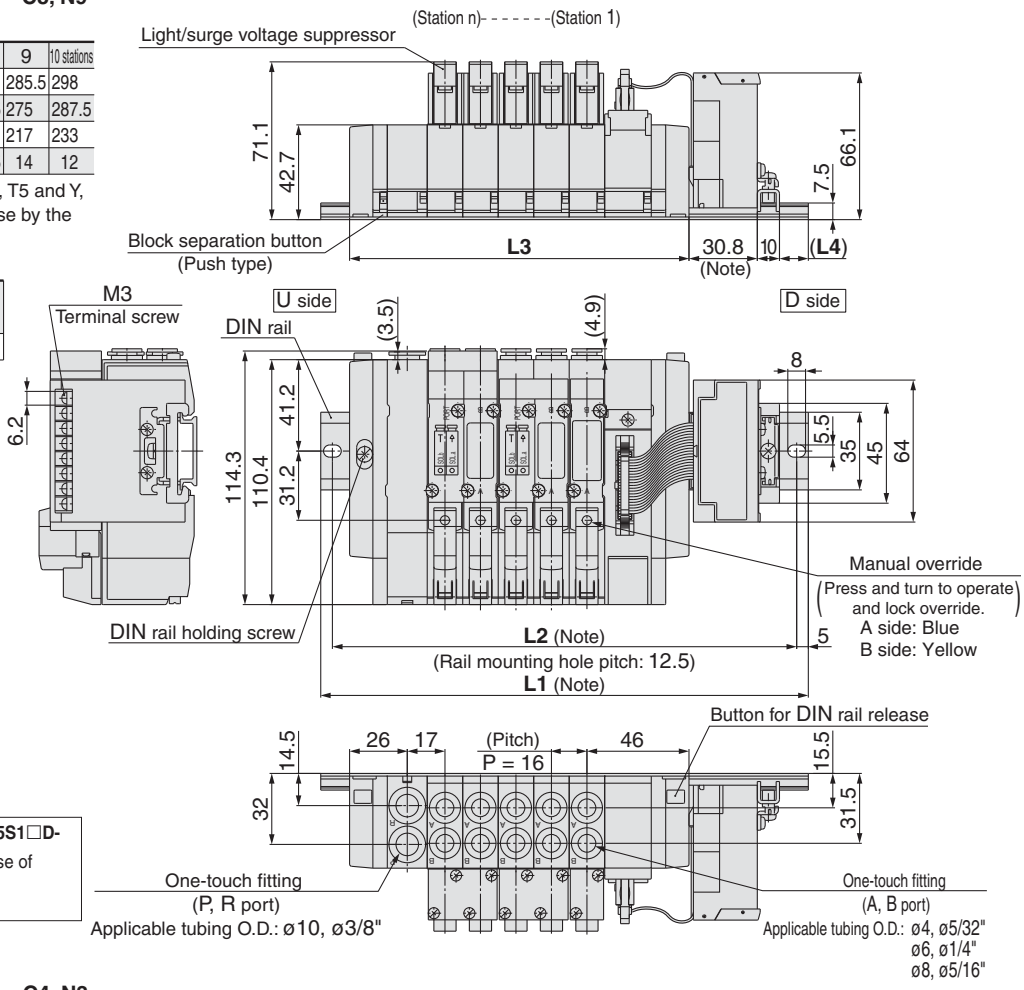

Note) The **L1** to **L4** dimensions of **SS5Y5-45S1□D-Stations** (C4, N3 / C6, N7 / C8, N9) are identical to those of SS5Y5-45S1□D-Stations U-(C4, N3 / C6, N7 / C8, N9).

SS5Y5-45S1□D-Stations B-C4, N3 C6, N7 C8, N9 -Q (for SI unit types C, Q, R1, R2 and V)

Stations n	2 stations	3	4	5	6	7	8	9	10 stations
L1	198	210.5	223	235.5	260.5	273	285.5	310.5	323
L2	187.5	200	212.5	225	250	262.5	275	300	312.5
L3	123	139	155	171	187	203	219	235	251
L4	17	15.5	13.5	12	16.5	14.5	13	17.5	15.5

Stations n	11 stations	12	13	14	15	16 stations
L1	335.5	348	373	385.5	398	410.5
L2	325	337.5	362.5	375	387.5	400
L3	267	283	299	315	331	347
L4	14	12	16.5	15	13	11.5

Note) For SI unit types N, P, T2, T4, T5 and Y, the dimensions below increase by the values shown:

SI Unit type	SI Unit height	SI Unit length	L1 & L2
T2, T4, T5	22.5 mm	24.3 mm	25 mm

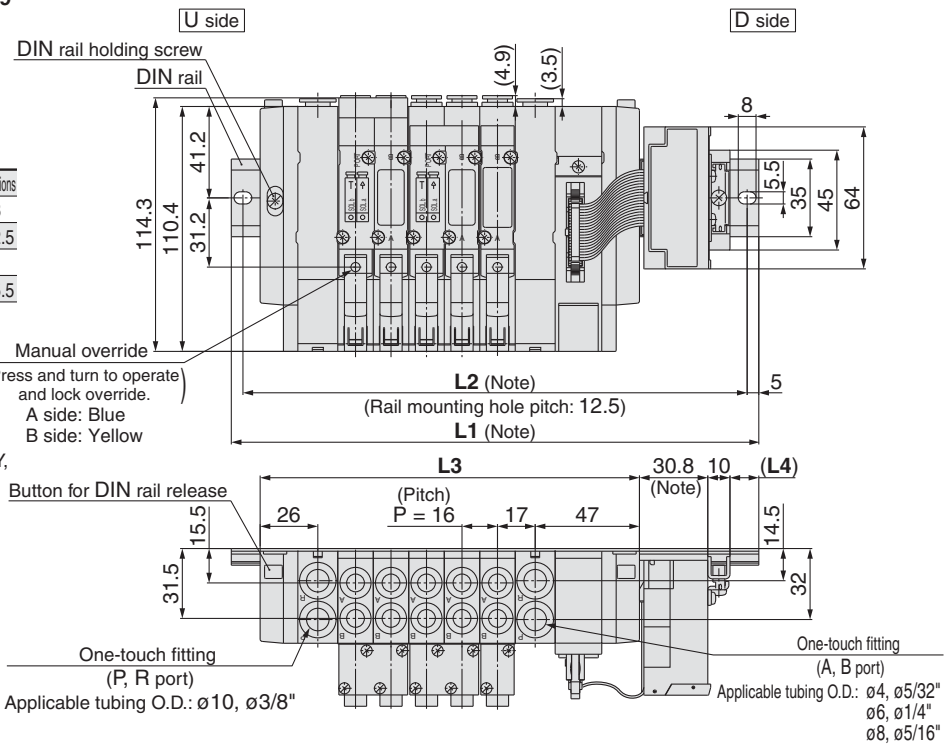

3 Port Valve
Series SY300/500
Mixed Mounting Type on 5 Port Valve Manifold

3 port valve can be mounted on manifold for 5 port valve.

Applications

Possible to be mounted on all kinds of manifolds for Series SY3000/5000.
Refer to “How to Order Manifold” for the details.

How to Order Valve Manifold Assembly (Example)

Example

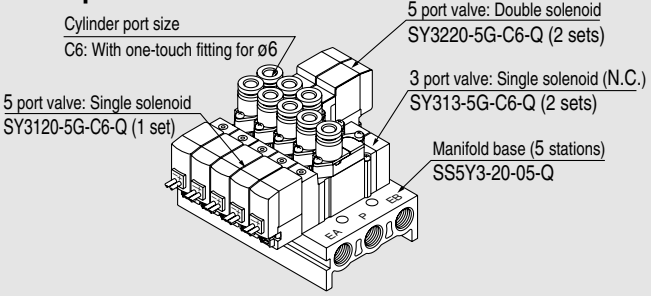

	SS5Y3-20-05-Q	**1 set (Type 20, 5 station manifold base part no.)**
*	**SY313-5G-C6-Q**	**2 sets (3 port valve, type NC part no.)**
*	**SY3120-5G-C6-Q**	**1 set (5 port valve, single solenoid part no.)**
*	**SY3220-5G-C6-Q**	**2 sets (5 port valve, double solenoid part no.)**

→ The asterisk denotes the symbol for assembly.
Prefix it to the part nos. of the solenoid valve, etc.

Add the valve and option part number under the manifold base part number. In the case of complex arrangement, specify them on the manifold specification sheet.

Body Ported/How to Order Valve

Individual Wiring: For SS5Y$^{3}_{5}$-20

SY 5 1 3 □ □ – 5 L □ □ – 01 □ -Q

Series

3	SY300
5	SY500

Type of actuation

1	Normally closed (N.C.)
2	Normally open (N.O.)

Solenoid type

-	Single solenoid
D	Double solenoid

Coil specifications

-	Standard
T	With power saving circuit (24 VDC, 12 VDC only)

∗ Power saving circuit is not available in the case of D, DO or W□ type.

Rated voltage

For DC

5	24 VDC
6	12 VDC
V	6 VDC
S	5 VDC
R	3 VDC

For AC

1	100 VAC
2	200 VAC
3	110 VAC [115 VAC]
4	220 VAC [230 VAC]

∗ DC specifications of Type D and DO is only available with 12 and 24 VDC.
∗ AC specification is only available with D and DO type.

Electrical entry

24, 12, 6, 5, 3 VDC			24, 12 VDC/ 100, 110, 200, 220 VAC	24, 12, 6, 5, 3 VDC
Grommet	L plug connector	M plug connector	DIN terminal (SY5000 only)	M8 connector ∗
G: Lead wire length 300 mm **H:** Lead wire length 600 mm	**L:** With lead wire (Length 300 mm) **LN:** Without lead wire **LO:** Without connector	**M:** With lead wire (Length 300 mm) **MN:** Without lead wire **MO:** Without connector	**D:** With connector **DO:** Without connector	**WO:** Without connector cable **W□:** With connector cable Note 1)

∗ LN, MN type: with 2 sockets.
∗ For DIN terminal of SY300 series, refer to back page 10.
∗ DIN terminal type “Y” which conforms to EN-175301-803C (former DIN43650C) is also available. For details, refer to page 210.
∗ For connector cable of M8 connector, refer to back page 12.
∗ Connector M8 type “WA” conforming to IEC 60947-5-2 standard, is also available. For details, see page 211.
Note 1) Enter the cable length symbols in □. Please be sure to fill in the blank referring to back page 13.

Note) When placing an order for body ported solenoid valve as a single unit, mounting bolt for manifold and gasket are not attached. Order them separately, if necessary.
(For details, refer to page 56.)

Thread type

-	Rc
F	G
N	NPT
T	NPTF

∗ Except for M5

A port size

Thread piping

Symbol	Port size	Applicable series
M5	M5	SY300
01	1/8	SY500

One-touch fitting (Metric size)

Symbol	Port size	Applicable series
C4	One-touch fitting for ø4	SY300
C6	One-touch fitting for ø6	
C6	One-touch fitting for ø6	SY500
C8	One-touch fitting for ø8	

One-touch fitting (Inch size)

Symbol	Port size	Applicable series
N3	One-touch fitting for ø5/32"	SY300
N7	One-touch fitting for ø1/4"	
N7	One-touch fitting for ø1/4"	SY500
N9	One-touch fitting for ø5/16"	

Manual override

-	Non-locking push type
D	Push-turn locking slotted type
E	Push-turn locking lever type

Light/surge voltage suppressor

Electrical entry for G, H, L, M, W

-	Without light/surge voltage suppressor
S	With surge voltage suppressor
Z	With light/surge voltage suppressor
R	With surge voltage suppressor (Non-polar type)
U	With light/surge voltage suppressor (Non-polar type)

∗ Power saving circuit is only available in the "Z" type.

Electrical entry for D (SY500 only)

-	Without light/surge voltage suppressor
S	With surge voltage suppressor
Z	With light/surge voltage suppressor

∗ DOZ is not available.
∗ For AC voltage valves there is no “S” option. It is already built-in to the rectifier circuit.

Body Ported/How to Order Valve

Flat ribbon cable: SS5Y$^{3}_{5}$-20P

Light/surge voltage suppressor

Z	With light/surge voltage suppressor
U	With light/surge voltage suppressor (Non-polar type)

Note) Z: Positive common specifications only.

A port size

Thread piping

Symbol	Port size	Applicable series
M5	M5	SY300
01	1/8	SY500

One-touch fitting (Metric size)

Symbol	Port size	Applicable series
C4	One-touch fitting for ø4	SY300
C6	One-touch fitting for ø6	SY300
C6	One-touch fitting for ø6	SY500
C8	One-touch fitting for ø8	SY500

One-touch fitting (Inch size)

Symbol	Port size	Applicable series
N3	One-touch fitting for ø5/32"	SY300
N7	One-touch fitting for ø1/4"	SY300
N7	One-touch fitting for ø1/4"	SY500
N9	One-touch fitting for ø5/16"	SY500

Rated voltage

5	24 VDC
6	12 VDC

For DC: SY 5 1 3 □ – 5 LO Z □ – □ □ -Q

Series

3	SY300
5	SY500

Type of actuation

1	Normally closed (N.C.)
2	Normally open (N.C.)

Solenoid type

-	Single solenoid
D	Double solenoid

Thread type

-	Rc
F	G
N	NPT
T	NPTF

∗ Except for M5

Manual override

-	Non-locking push type
D	Push-turn locking slotted type
E	Push-turn locking lever type

Base Mounted/How to Order Valve

Individual wiring: For SS5Y$^{3}_{5}$-41/42/45

SY 5 1 5 □ □ □ – 5 L □ □ -Q

Series

3	SY300
5	SY500

Type of actuation

1	Normally closed (N.C.)
2	Normally open (N.C.)

Solenoid type

-	Single solenoid
D	Double solenoid

Pilot type

-	Internal pilot
R	External pilot

∗ External pilot is not available for Type 41 manifold.

Coil specifications

Nil	Standard
T	With power saving circuit (24 VDC, 12 VDC only)

∗ Power saving circuit is not available in the case of D, DO or W□ type.

Rated voltage

For DC

5	24 VDC
6	12 VDC
V	6 VDC
S	5 VDC
R	3 VDC

AC

1	100 VAC
2	200 VAC
3	110 VAC [115 VAC]
4	220 VAC [230 VAC]

∗ DC specifications of Type D and DO is only available with 12 and 24 VDC.
∗ AC specification is only available with D and DO type.

Manual override

-	Non-locking push type
D	Push-turn locking slotted type
E	Push-turn locking lever type

Light/surge voltage suppressor

Electrical entry for G, H, L, M, W

-	Without light/surge voltage suppressor
S	With surge voltage suppressor
Z	With light/surge voltage suppressor
R	With surge voltage suppressor (Non-polar type)
U	With light/surge voltage suppressor (Non-polar type)

∗ Power saving circuit is only available in the "Z" type.

Electrical entry for D (SY500 only)

-	Without light/surge voltage suppressor
S	With surge voltage suppressor
Z	With light/surge voltage suppressor

∗ DOZ is not available.
∗ For AC voltage valves there is no "S" option. It is already built-in to the rectifier circuit.

Electrical entry

24, 12 VDC			24, 12 VDC/ 100, 110, 200, 220 VAC	24, 12, 6, 5, 3 VDC
Grommet	**L plug connector**	**M plug connector**	**DIN terminal** (SY5000 only)	**M8 connector** ∗
G: Lead wire length 300 mm **H:** Lead wire length 600 mm	**L:** With lead wire (Length 300 mm) **LN:** Without lead wire **LO:** Without connector	**M:** With lead wire (Length 300 mm) **MN:** Without lead wire **MO:** Without connector	**D:** With connector **DO:** Without connector	**WO:** Without connector cable **W□:** With connector cable Note 1)

∗ LN, MN type: with 2 sockets.
∗ For DIN terminal of SY300 series, refer to back page 10.
∗ DIN terminal type "Y" which conforms to EN-175301-803C (former DIN43650C) is also available. For details, refer to page 210.
∗ For connector cable of M8 connector, refer to back page 12.
∗ Connector M8 type "WA" conforming to IEC 60947-5-2 standard, is also available. For details, see page 211.
Note 1) Enter the cable length symbols in □. Please be sure to fill in the blank referring to back page 13.

Base Mounted/How to Order Valve

Flat ribbon cable:
Connector box type: For SS5Y$^{3}_{5}$-41P/42P/45-A

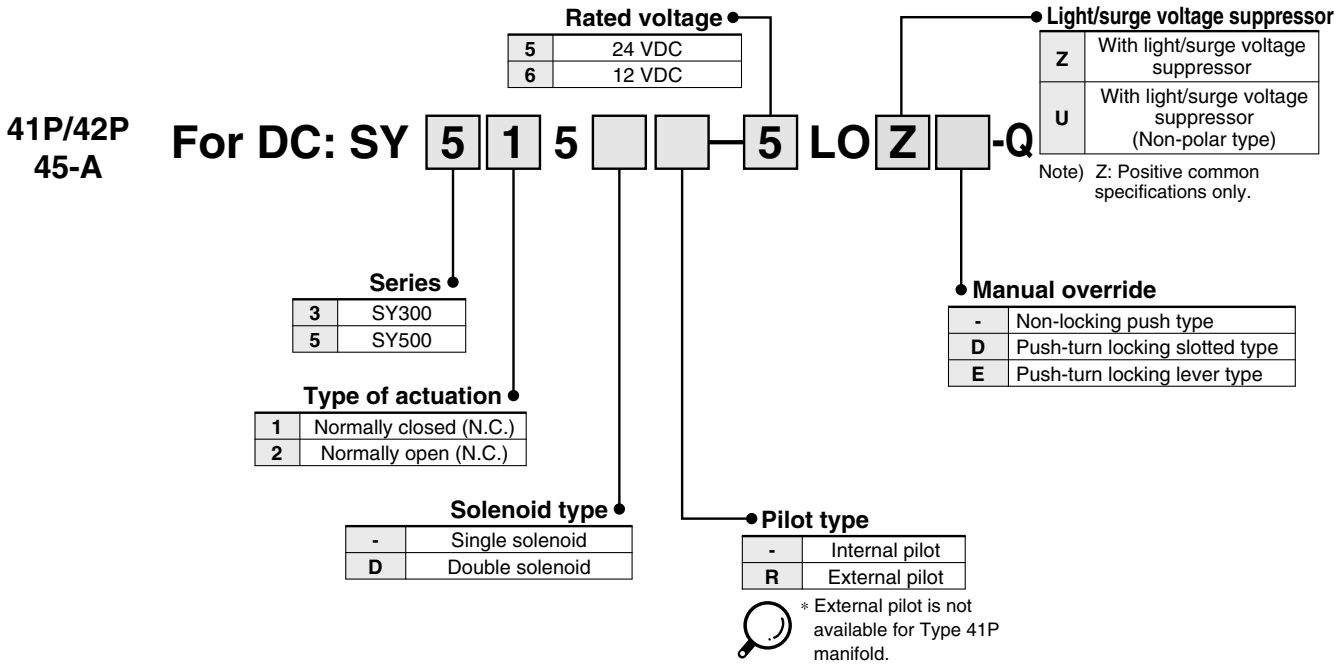

Plug-in: For SS5Y$^{3}_{5}$-45□

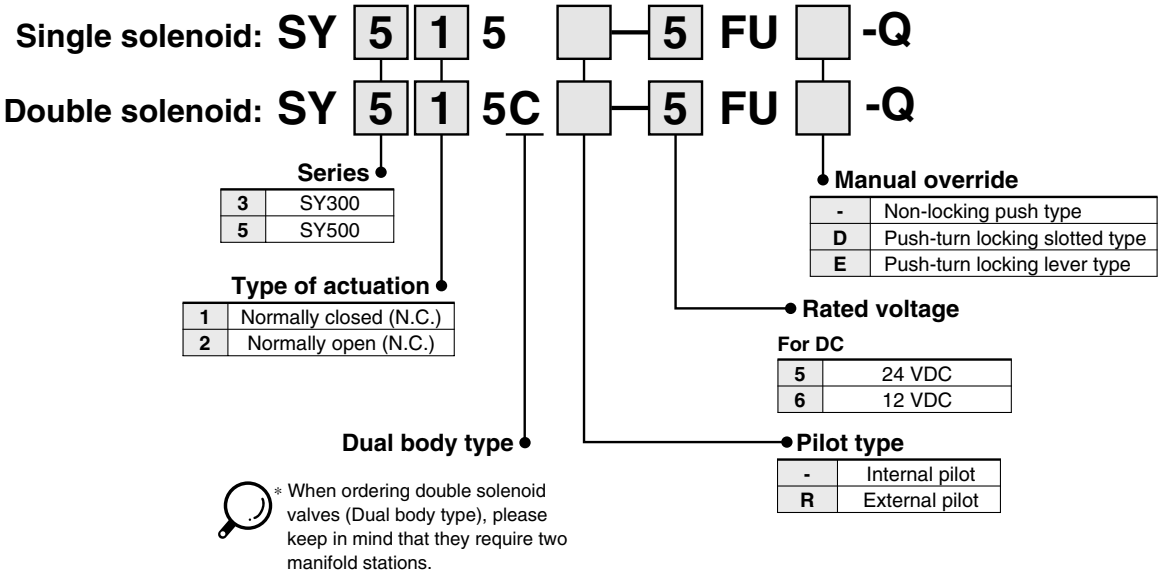

Construction

JIS Symbol Single

Normally closed (N.C.) Single solenoid

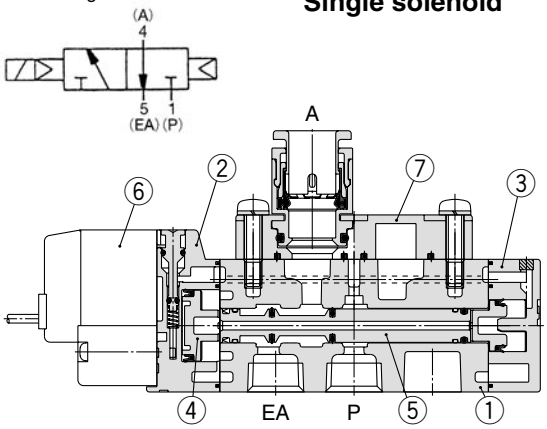

JIS Symbol Double

Normally closed (N.C.) Double solenoid

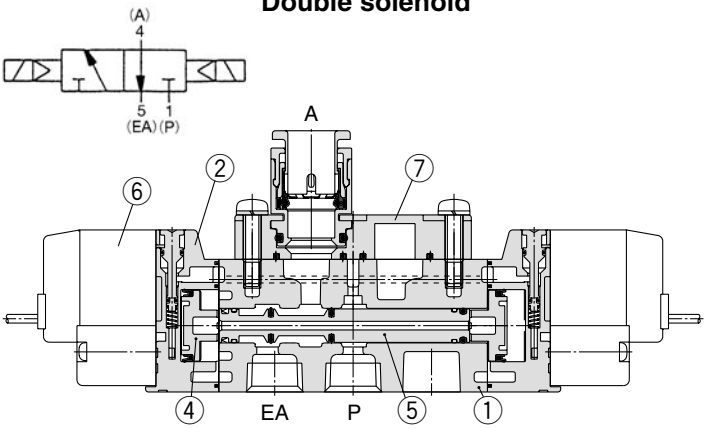

JIS Symbol Single

Normally open (N.O.) Single solenoid

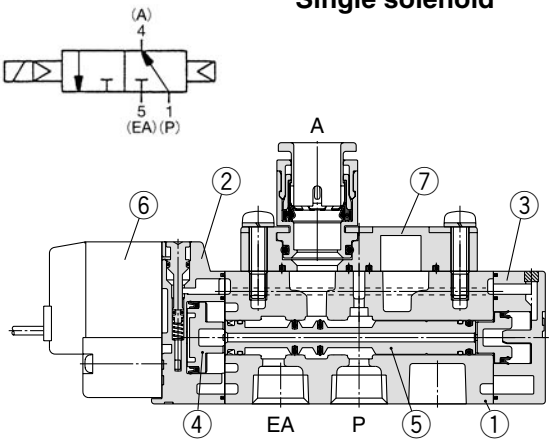

JIS Symbol Double

Normally open (N.O.) Double solenoid

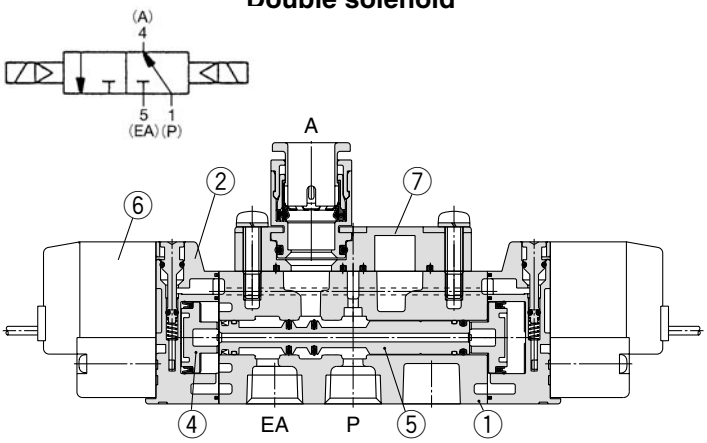

Component Parts

No.	Description	Material	Note
1	Body	Aluminum die-casted (SY3000: Zinc die-casted)	White
2	Adapter plate	Resin	White
3	End plate	Resin	White
4	Piston	Resin	–
5	Spool valve assembly	Aluminum, H-NBR	–

Replacement Parts

No.	Description	No.
6	Pilot valve assembly	Refer to "How to Order Pilot Valve Assembly" on page 5.
7	M5 port block assembly	Refer to "How to Order Port Block Assembly" below.

How to Order M5 Port Block Assembly

SY □ 00 — 2A — □ □

Series

3	Series SY300
5	Series SY500

Thread type

-	Rc
F	G
N	NPT
T	NPTF

∗ Except for M5

A, B port size

Thread piping

Symbol	Port size	Applicable series
M5	M5	SY300
01	1/8	SY500

One-touch fitting (Metric size)

Symbol	Port size	Applicable series
C4	One-touch fitting for ø4	SY300
C6	One-touch fitting for ø6	
C4	One-touch fitting for ø4	SY500
C6	One-touch fitting for ø6	
C8	One-touch fitting for ø8	

One-touch fitting (Inch size)

Symbol	Port size	Applicable series
N3	One-touch fitting for ø5/32"	SY300
N7	One-touch fitting for ø1/4"	
N3	One-touch fitting for ø5/32"	SY500
N7	One-touch fitting for ø1/4"	
N9	One-touch fitting for ø5/16"	

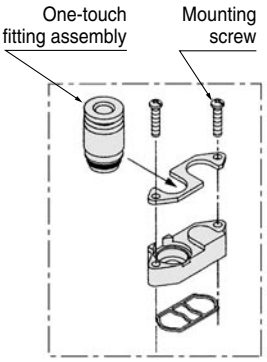

Port block assembly (cassette type)

∗ Only replacement of the fittings assembly is possible.

Metric size

SY300	One-touch fitting for ø4	VVQ1000-50A-C4
	One-touch fitting for ø6	VVQ1000-50A-C6
SY500	One-touch fitting for ø4	VVQ1000-51A-C4
	One-touch fitting for ø6	VVQ1000-51A-C6
	One-touch fitting for ø8	VVQ1000-51A-C8

Inch size

SY300	One-touch fitting for ø5/32"	VVQ1000-50A-N3
	One-touch fitting for ø1/4"	VVQ1000-50A-N7
SY500	One-touch fitting for ø5/32"	VVQ1000-51A-N3
	One-touch fitting for ø1/4"	VVQ1000-51A-N7
	One-touch fitting for ø5/16"	VVQ1000-51A-N9

⚠ Caution

Mounting screw tightening torques

SY300 (M2) : 0.12 N·m
SY500 (M3) : 0.6 N·m

Specifications

Dimensions, specifications, solenoid specifications, response time and effective area are the same as 5 port valve.

Weight

Series SY300

Valve model	Type of actuation	Weight (g)	
		Grommet	L, M plug connector
SY3□3-□□-M5	Single	51	53
	Double	68	74
SY3□3-□□-C4 N3	Single	56	59
	Double	74	79
SY3□3-□□-C6 N7	Single	54	57
	Double	72	77
SY3□5-□□	Single	47	50
	Double	65	70

Series SY500

Valve model	Type of actuation	Weight (g)		
		Grommet	L, M plug connector	DIN terminal
SY5□3-□-01□	Single	69	72	93
	Double	87	93	135
SY5□3-□-C4 N3	Single	82	82	103
	Double	100	102	144
SY5□3-□-C6 N7	Single	79	77	98
	Double	97	98	140
SY5□3-□-C8 N9	Single	75	84	105
	Double	93	105	147
SY5□5-□□	Single	55	58	79
	Double	73	78	120

5 Port Air Operated Valve
Series SYA3000/5000/7000

How to Order

A, B port size

Thread piping

Symbol	Port size	Applicable series
M5	M5	SYA3000
01	1/8	SYA5000
02	1/4	SYA7000

One-touch fitting (Metric size)

Symbol	Port size	Applicable series
C4	One-touch fitting for ø4	SYA3000
C6	One-touch fitting for ø6	
C4	One-touch fitting for ø4	SYA5000
C6	One-touch fitting for ø6	
C8	One-touch fitting for ø8	
C8	One-touch fitting for ø8	SYA7000
C10	One-touch fitting for ø10	

One-touch fitting (Inch size)

Symbol	Port size	Applicable series
N3	One-touch fitting for ø5/32"	SYA3000
N7	One-touch fitting for ø1/4"	
N3	One-touch fitting for ø5/32"	SYA5000
N7	One-touch fitting for ø1/4"	
N9	One-touch fitting for ø5/16"	
N7	One-touch fitting for ø1/4"	SYA7000
N9	One-touch fitting for ø5/16"	

Thread type

-	Rc
F	G
N	NPT
T	NPTF

∗ Except for M5

Bracket

-	Without bracket
F1	With foot bracket (2 position single only)
F2	With side bracket

Series

3	SYA3000
5	SYA5000
7	SYA7000

Body ported SYA **5** **1** **20** — **C6** [ ] [ ]

Base mounted SYA **5** **1** **40** — [ ] [ ]

Series

3	SYA3000
5	SYA5000

P, R port thread type

-	Rc
F	G
N	NPT
T	NPTF

Port size

Symbol	Port size	Applicable series
-	Without sub-plate	
01	1/8 With sub-plate	SYA3000
02	1/4 With sub-plate	SYA5000

Base mounted SYA **7** **1** **40** — [ ] [ ]

Type of actuation

1	2 position single 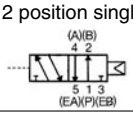
2	2 position double 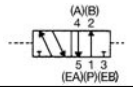
3	3 position closed center 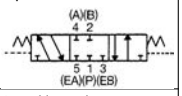
4	3 position exhaust center 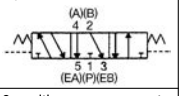
5	3 position pressure center 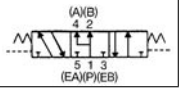

P, R port thread type

-	Rc
F	G
N	NPT
T	NPTF

Port size

Symbol	Port size
-	Without sub-plate
00	Without sub-plate (Pilot port: expect for RC)
02	1/4 With sub-plate
03	3/8 With sub-plate

Specifications

Fluid		Air
Operating pressure range MPa	2 position single	0.15 to 0.7
	2 position double	0.1 to 0.7
	3 position	0.2 to 0.7
Pilot pressure range Note 1) MPa	2 position single	(0.7 x P + 0.1) to 0.7P: Operating pressure range
	2 position double	0.1 to 0.7
	3 position	0.2 to 0.7
Ambient and fluid temperature (°C)		Max. 60
Manual override (Manual operation)		Non-locking push type
Lubrication		Not required
Mounting orientation		Unrestricted
Impact/Vibration resistance (m/s^2) Note 2)		150/30

Note 1) In case of single type, be certain that pressure within operating pressure range be supplied to supply port, because return pressure is introduced from supply port {1(P)} for activation.

Note 2) Impact resistance: No malfunction resulted from the impact test using a drop impact tester. The test was performed on the axis and right angle directions of the main valve and armature, when pilot signal is ON and OFF. (Value in the initial state)

Vibration resistance: No malfunction occurred in one sweep test between 8.3 and 2000 Hz. Test was performed to axis and right angle directions of the main valve and armature when pilot signal is ON and OFF. (Value in the initial state)

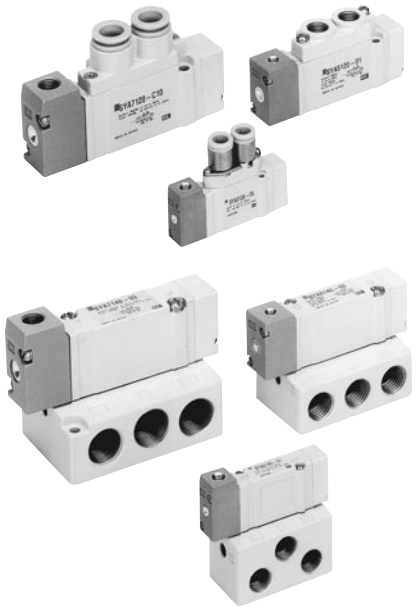

⚠ Caution

For Safety Instructions and Common Precautions, refer to back page 1 through to 15.

How to Order Manifold Base

Same manifolds as series SY (Non plug-in style) are prepared.
(For 20, 41, 42 and 45 Types)

SS5YA$\begin{smallmatrix}3\\5\\7\end{smallmatrix}$– Fill the same as SS5Y$\begin{smallmatrix}3\\5\\7\end{smallmatrix}$.

* Specify the part numbers for valves and options together beneath the manifold base part number.

<Example>

SS5YA5-42-03-02 1 set (Type 42, 3 station manifold base part no.)
* SYA5140 1 set (Single air operated valve part no.)
* SYA5240 1 set (Double air operated valve part no.)
* SY5000-26-20A-Q 1 set (Blanking plate assembly part no.)

└→The asterisk denotes the symbol for assembly.
Prefix it to the part nos. of the solenoid valve, etc.

Note) When single body ported air operated valves are ordered, manifold mounting bolts and gaskets are not included. Order them separately if necessary.
(For details, refer to page 56.)

Pilot Pressure Range (Single pilot)

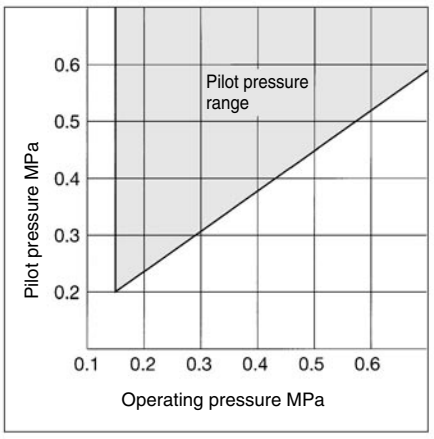

Flow Characteristics/Weight

Model/Series SYA3□20 (Body ported)

Valve model	Type of actuation		Pilot port size (Nominal size)	Port size		Flow characteristics								Weight (g)
						1 → 4/2 (P → A/B)				4/2 → 5/3 (A/B → EA/EB)				
				P, EA, EB	A, B	C (dm³/(s·bar))	b	Cv	Q[ℓ/min(ANR)]*	C (dm³/(s·bar))	b	Cv	Q[ℓ/min(ANR)]*	
SYA3□20-M5	2 position	Single	M5	M5	M5	0.61	0.44	0.16	171	0.64	0.45	0.18	181	35
		Double												37
	3 position	Closed center				0.48	0.46	0.13	137	0.47	0.43	0.13	131	39
		Exhaust center				0.47	0.42	0.13	130	0.47 (0.44)	0.41 (0.37)	0.13 (0.12)	129 (117)	
		Pressure center				0.50 (0.41)	0.48 (0.35)	0.15 (0.11)	145 (108)	0.47	0.43	0.13	131	
SYA3□20-C4	2 position	Single			C4 (One-touch fitting for ø4)	0.72	0.29	0.18	182	0.64	0.34	0.17	167	44
		Double												46
	3 position	Closed center				0.59	0.28	0.15	148	0.59	0.30	0.15	150	48
		Exhaust center				0.63	0.35	0.16	166	0.42 (0.41)	0.34 (0.37)	0.11 (0.11)	110 (109)	
		Pressure center				0.76 (0.46)	0.42 (0.34)	0.21 (0.12)	210 (120)	0.59	0.29	0.15	149	
SYA3□20-C6	2 position	Single			C6 (One-touch fitting for ø6)	0.76	0.30	0.19	193	0.65	0.39	0.17	176	40
		Double												42
	3 position	Closed center				0.76	0.55	0.24	233	0.60	0.33	0.16	156	44
		Exhaust center				0.65	0.32	0.16	167	0.64(0.42)	0.31 (0.36)	0.17 (0.11)	164 (111)	
		Pressure center				0.77 (0.49)	0.34 (0.43)	0.21 (0.15)	201 (136)	0.61	0.34	0.16	159	

Note) ( ): denotes normal position.

* These values have been calculated according to ISO6358 and represent the flow rate measured in standard conditions at an upstream pressure of 0.6 MPa (relative pressure) and a differential pressure of 0.1MPa.

Model/Series SYA3□40 (Base mounted)

Valve model	Type of actuation		Pilot port size (Nominal size)	Port size	Flow characteristics Note 1)								Weight Note 2) (g)
					1 → 4/2 (P → A/B)				4/2 → 5/3 (A/B → EA/EB)				
					C (dm³/ (s·bar))	b	Cv	Q[ℓ/min(ANR)]*	C (dm³/(s·bar))	b	Cv	Q[ℓ/min(ANR)]*	
SYA3□40-01□	2 position	Single	M5	1/8	1.0	0.30	0.24	254	1.1	0.30	0.26	280	69 (34)
		Double											71 (36)
	3 position	Closed center			0.77	0.28	0.18	193	0.85	0.30	0.19	216	73 (38)
		Exhaust center			0.73	0.31	0.18	187	1.1 (0.55)	0.26 (0.52)	0.24 (0.16)	273 (164)	
		Pressure center			1.2 (0.51)	0.24 (0.45)	0.29 (0.14)	294 (144)	0.89	0.47	0.24	255	

Note 1) ( ): denotes normal position.
Note 2) [ ]: Without sub-plate.

* These values have been calculated according to ISO6358 and represent the flow rate measured in standard conditions at an upstream pressure of 0.6 MPa (relative pressure) and a differential pressure of 0.1MPa.

Flow Characteristics/Weight

Model/Series SYA5□40 (Body ported)

Valve model	Type of actuation		Pilot port size (Nominal size)	Port size		Flow characteristics Note)								Weight (g)
						1 → 4/2 (P → A/B)				4/2 → 5/3 (A/B → EA/EB)				
				P, EA, EB	A, B	C [dm³/(s·bar)]	b	Cv	Q[ℓ/min(ANR)]*	C [dm³/(s·bar)]	b	Cv	Q[ℓ/min(ANR)]*	
SYA5□20-01□	2 position	Single	M5 x 0.8	1/8	Rc1/8	1.9	0.35	0.49	499	2.4	0.39	0.61	648	58
		Double												64
	3 position	Closed center				1.7	0.43	0.45	473	1.8	0.35	0.46	473	69
		Exhaust center				1.5	0.44	0.41	420	2.5 [1.5]	0.32 [0.43]	0.59 [0.40]	644 [417]	
		Pressure center				2.2 [0.91]	0.46 [0.58]	0.61 [0.28]	626 [287]	1.8	0.38	0.46	483	
SYA5□20-C4	2 position	Single			C4 (One-touch fitting for ø4)	0.75	0.43	0.20	209	0.85	0.64	0.30	285	82
		Double												87
	3 position	Closed center				0.74	0.40	0.19	201	0.84	0.57	0.28	263	93
		Exhaust center				0.75	0.36	0.19	198	0.84 [0.84]	0.64 [0.53]	0.30 [0.27]	281 [253]	
		Pressure center				0.78 [0.71]	0.44 [0.37]	0.21 [0.18]	219 [189]	0.84	0.57	0.27	263	
SYA5□20-C6	2 position	Single			C6 (One-touch fitting for ø6)	1.5	0.33	0.33	389	2.0	0.37	0.52	533	76
		Double												82
	3 position	Closed center				1.3	0.31	0.33	333	1.6	0.32	0.39	412	87
		Exhaust center				1.3	0.33	0.33	337	1.8 [1.4]	0.35 [0.37]	0.44 [0.35]	473 [373]	
		Pressure center				1.7 [0.80]	0.31 [0.47]	0.42 [0.23]	435 [229]	1.7	0.33	0.44	441	
SYA5□20-C8	2 position	Single			C8 (One-touch fitting for ø8)	1.9	0.21	0.45	458	2.3	0.29	0.57	581	68
		Double												74
	3 position	Closed center				1.6	0.29	0.39	404	1.7	0.38	0.46	456	79
		Exhaust center				1.4	0.38	0.39	375	2.0 [1.5]	0.37 [0.40]	0.52 [0.43]	533 [411]	
		Pressure center				2.2 [1.6]	0.32 [0.44]	0.56 [0.44]	567 [448]	1.8	0.41	0.50	493	

Note) [ ]: denotes normal position.

* These values have been calculated according to ISO6358 and represent the flow rate measured in standard conditions at an upstream pressure of 0.6 MPa (relative pressure) and a differential pressure of 0.1MPa.

Model/Series SYA5□40 (Base mounted)

Valve model	Type of actuation		Pilot port size (Nominal size)	Port size	Flow characteristics Note 1)								Weight Note 2) (g)
					1 → 4/2 (P → A/B)				4/2 → 5/3 (A/B → EA/EB)				
					C [dm³/(s·bar)]	b	Cv	Q[ℓ/min(ANR)]*	C [dm³/(s·bar)]	b	Cv	Q[ℓ/min(ANR)]*	
SYA5□40-02□	2 position	Single	M5 x 0.8	1/4	2.4	0.41	0.64	658	2.8	0.29	0.66	707	105 (42)
		Double											110 (47)
	3 position	Closed center			1.8	0.47	0.50	516	1.8	0.40	0.47	490	115 (52)
		Exhaust center			1.4	0.55	0.44	430	3.0 [1.2]	0.33 [0.48]	0.72 [0.37]	778 [347]	
		Pressure center			3.3 [0.84]	0.36 [0.60]	0.85 [0.28]	873 [270]	1.8	0.40	0.48	490	

Note 1) [ ]: denotes the normal position.
Note 2) ( ): denotes without sub-plate.

* These values have been calculated according to ISO6358 and represent the flow rate measured in standard conditions at an upstream pressure of 0.6 MPa (relative pressure) and a differential pressure of 0.1MPa.

Model/Series SYA7□20 (Body ported)

Valve model	Type of actuation		Pilot port size (Nominal size)	Port size		Flow characteristics								Weight (g)
						1 → 4/2 (P → A/B)				4/2 → 5/3 (A/B → EA/EB)				
				P, EA, EB	A, B	C [dm³/(s·bar)]	b	Cv	Q[ℓ/min(ANR)]*	C [dm³/(s·bar)]	b	Cv	Q[ℓ/min(ANR)]*	
SYA7□20-02□	2 position	Single	1/8	P port: 1/4 EA, EB port: 1/8	1/4	4.1	0.23	0.93	999	3.3	0.33	0.81	855	132
		Double												177
	3 position	Closed center				2.9	0.31	0.70	742	2.4	0.38	0.63	644	186
		Exhaust center				2.5	0.39	0.65	675	3.4 [2.1]	0.35 [0.38]	0.82 [0.54]	893 [563]	
		Pressure center				4.3 [2.4]	0.23 [0.32]	0.97 [0.61]	1048 [618]	2.2	0.39	0.58	594	
SYA7□20-C8	2 position	Single			C8 (One-touch fitting for ø8)	3.2	0.26	0.77	794	3.2	0.37	0.82	852	138
		Double												183
	3 position	Closed center				2.6	0.24	0.63	637	2.4	0.31	0.62	614	192
		Exhaust center				2.4	0.25	0.57	592	2.6 [1.9]	0.42 [0.46]	0.70 [0.56]	718 [541]	
		Pressure center				3.3 [2.4]	0.28 [0.22]	0.78 [0.57]	829 [581]	2.2	0.34	0.60	574	
SYA7□20-C10	2 position	Single			C10 (One-touch fitting for ø10)	3.8	0.26	0.86	943	3.2	0.34	0.82	835	135
		Double												180
	3 position	Closed center				2.8	0.27	0.67	699	2.4	0.21	0.59	578	189
		Exhaust center				2.5	0.25	0.59	616	2.7 [2.0]	0.38 [0.38]	0.70 [0.56]	724 [536]	
		Pressure center				3.8 [2.4]	0.25 [0.31]	0.89 [0.61]	937 [614]	2.3	0.38	0.61	617	

Note) [ ]: denotes normal position.

* These values have been calculated according to ISO6358 and represent the flow rate measured in standard conditions at an upstream pressure of 0.6 MPa (relative pressure) and a differential pressure of 0.1MPa.

Model/Series SYA7□40 (Base mounted)

Valve model	Type of actuation		Pilot port size (Nominal size)	Port size	Flow characteristics Note 1)								Weight Note 2) (g)
					1 → 4/2 (P → A/B)				4/2 → 5/3 (A/B → EA/EB)				
					C [dm³/(s·bar)]	b	Cv	Q[ℓ/min(ANR)]*	C [dm³/(s·bar)]	b	Cv	Q[ℓ/min(ANR)]*	
SYA7□40-02□	2 position	Single	1/8	1/4	4.1	0.41	1.1	1123	4.1	0.29	1.0	1036	240 (111)
		Double											286 (157)
	3 position	Closed center			3.0	0.43	0.80	834	2.6	0.41	0.72	712	294 (165)
		Exhaust center			2.6	0.42	0.71	718	4.7 [1.7]	0.35 [0.48]	1.1 [0.49]	1235 [492]	
		Pressure center			5.3 [2.3]	0.39 [0.49]	1.3 [0.65]	1431 [670]	2.2	0.49	0.63	641	
SYA7□40-03	2 position	Single	1/8	3/8	4.9	0.29	1.2	1238	4.5	0.27	1.1	1123	240 (111)
		Double											286 (157)
	3 position	Closed center			3.0	0.40	0.80	816	2.6	0.45	0.73	734	294 (165)
		Exhaust center			2.6	0.42	0.71	718	4.8 [1.7]	0.35 [0.48]	1.1 [0.49]	1261 [492]	
		Pressure center			5.3 [2.3]	0.31 [0.51]	1.3 [0.64]	1356 [682]	2.3	0.45	0.66	649	

Note 1) [ ]: denotes the normal position.
Note 2) ( ): denotes without sub-plate.

* These values have been calculated according to ISO6358 and represent the flow rate measured in standard conditions at an upstream pressure of 0.6 MPa (relative pressure) and a differential pressure of 0.1MPa.

Series SYA3000: Body Ported

2 position single
SYA3120-$^{C4, N3}_{C6, N7}$ (-F2)

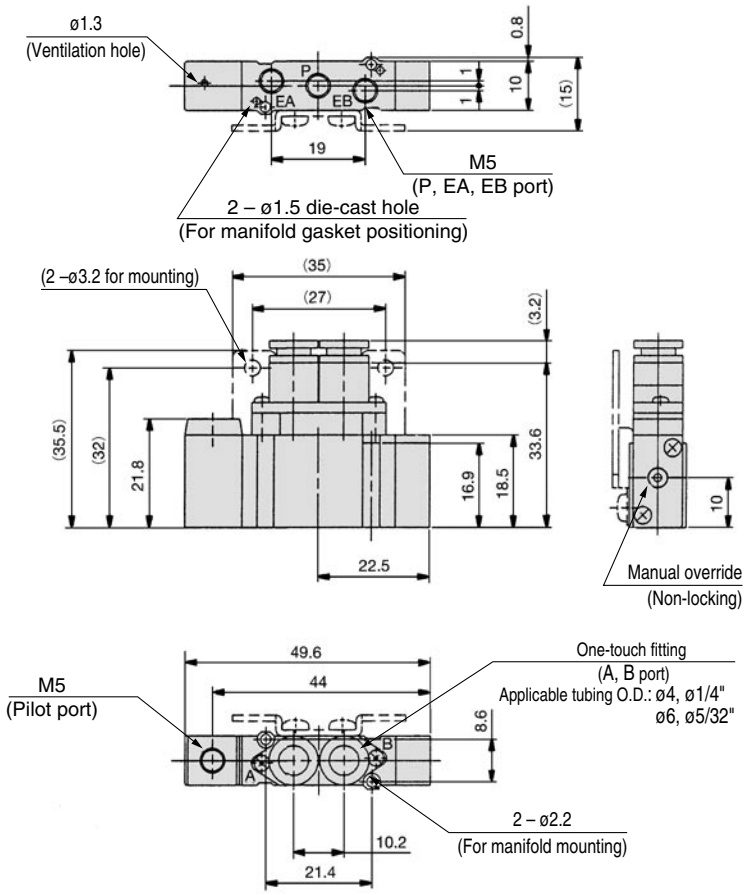

Foot bracket
SYA3120-$^{C4, N3}_{C6, N7}$ -F1

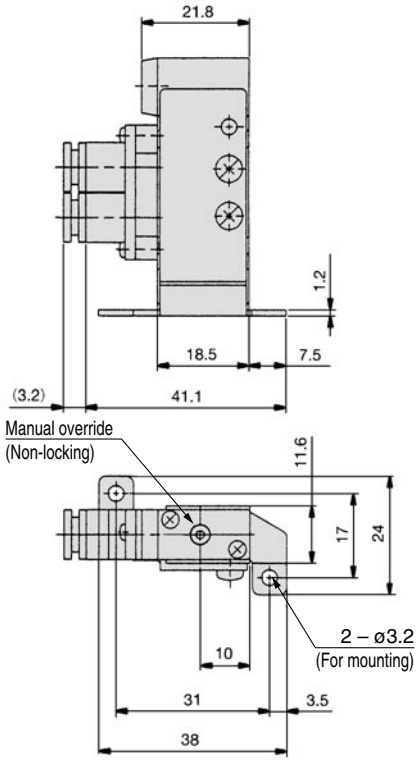

SYA3120-M5

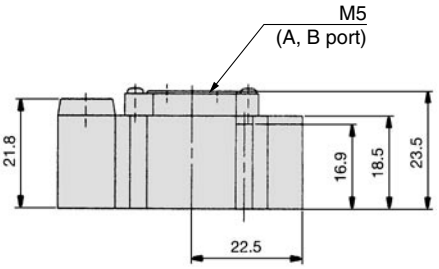

Series SYA3000: Body Ported

2 position double
SYA3220-C4, N3 / C6, N7 (-F2)

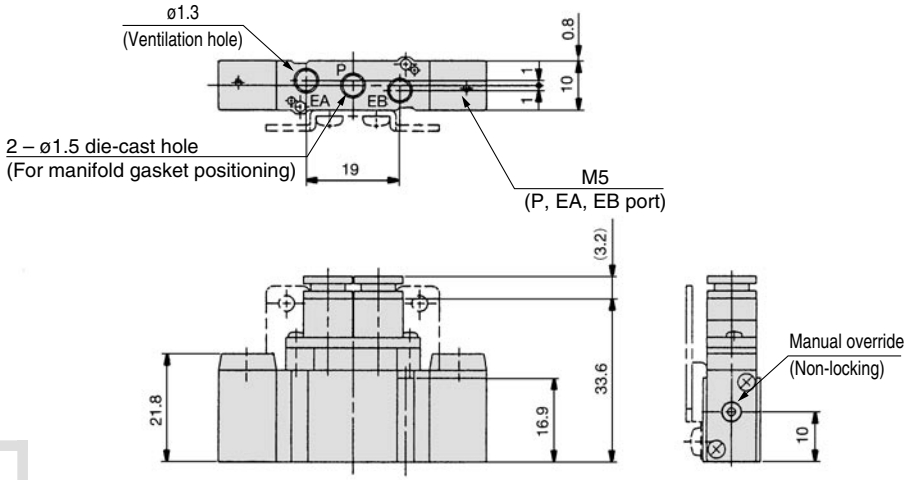

SYA3220-M5

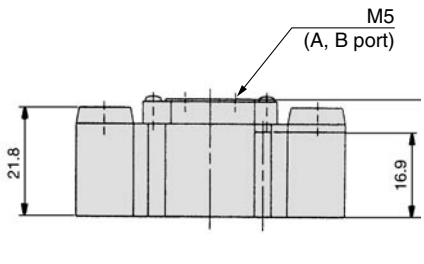

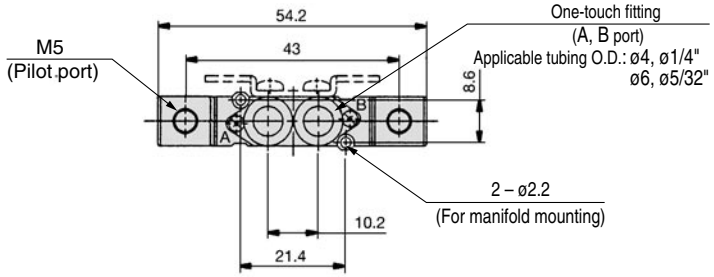

3 position closed center / exhaust center / pressure center
SYA3/4/5 20-C4, N3 / C6, N7 (-F2)

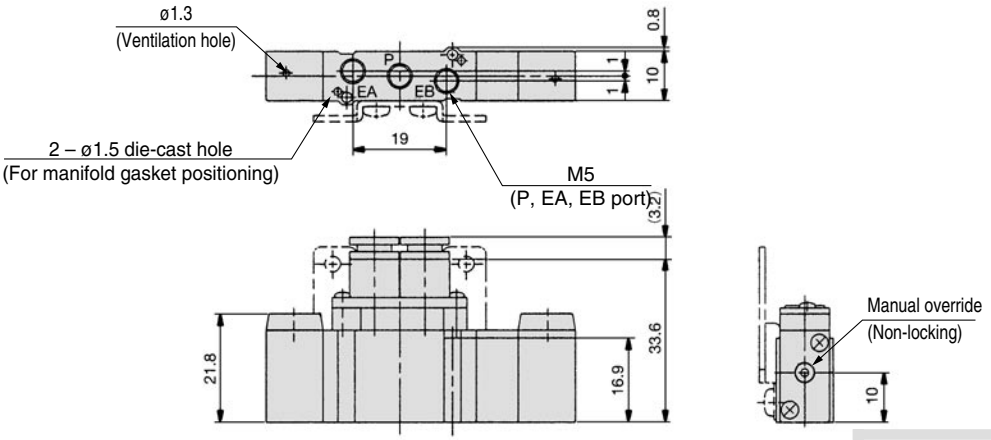

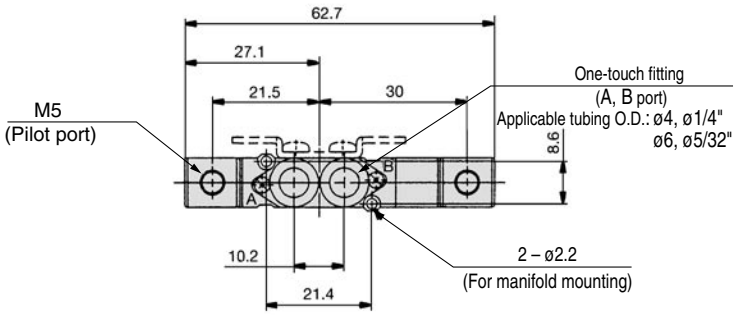

SYA3/4/5 20-M5

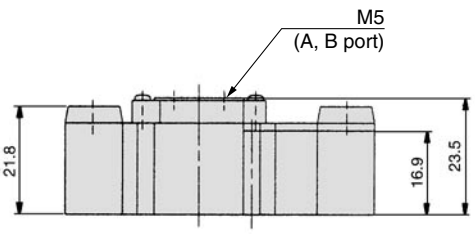

Series SYA3000: Base Mounted

2 position single
SYA3140-01□

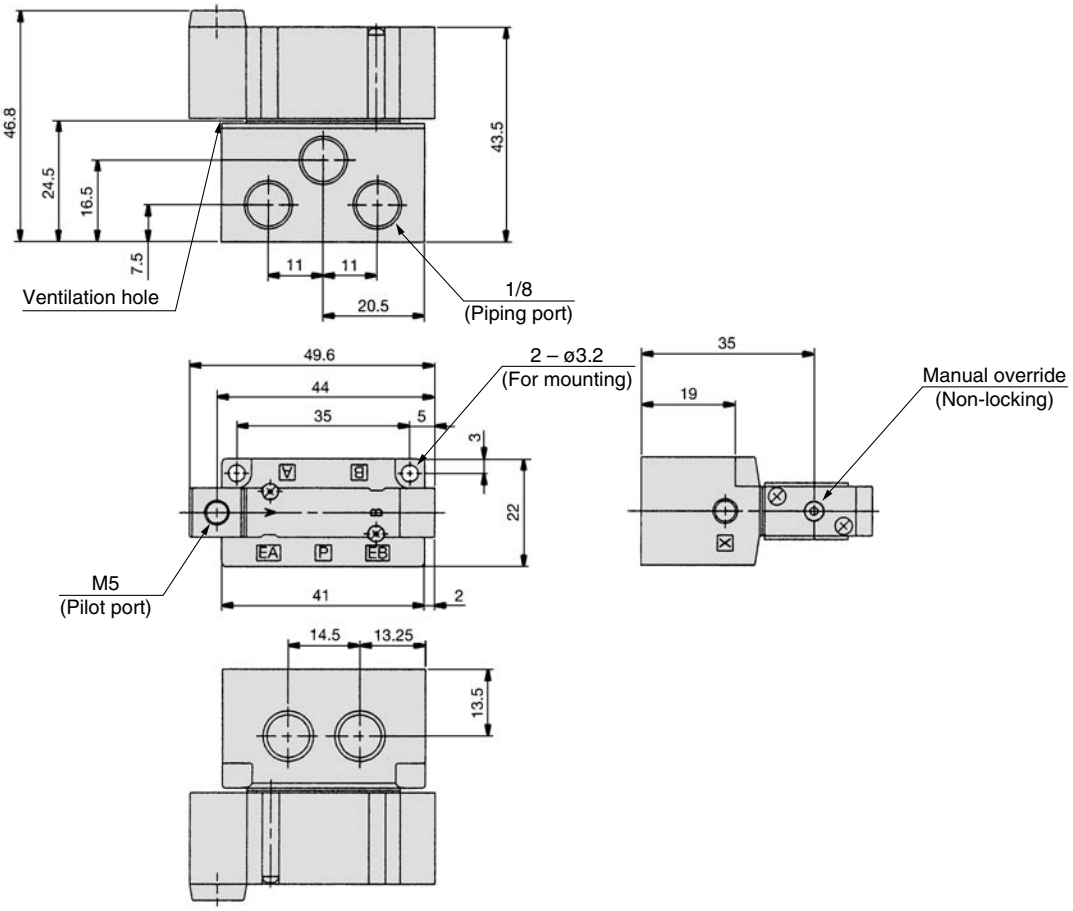

2 position double
SYA3240-01□

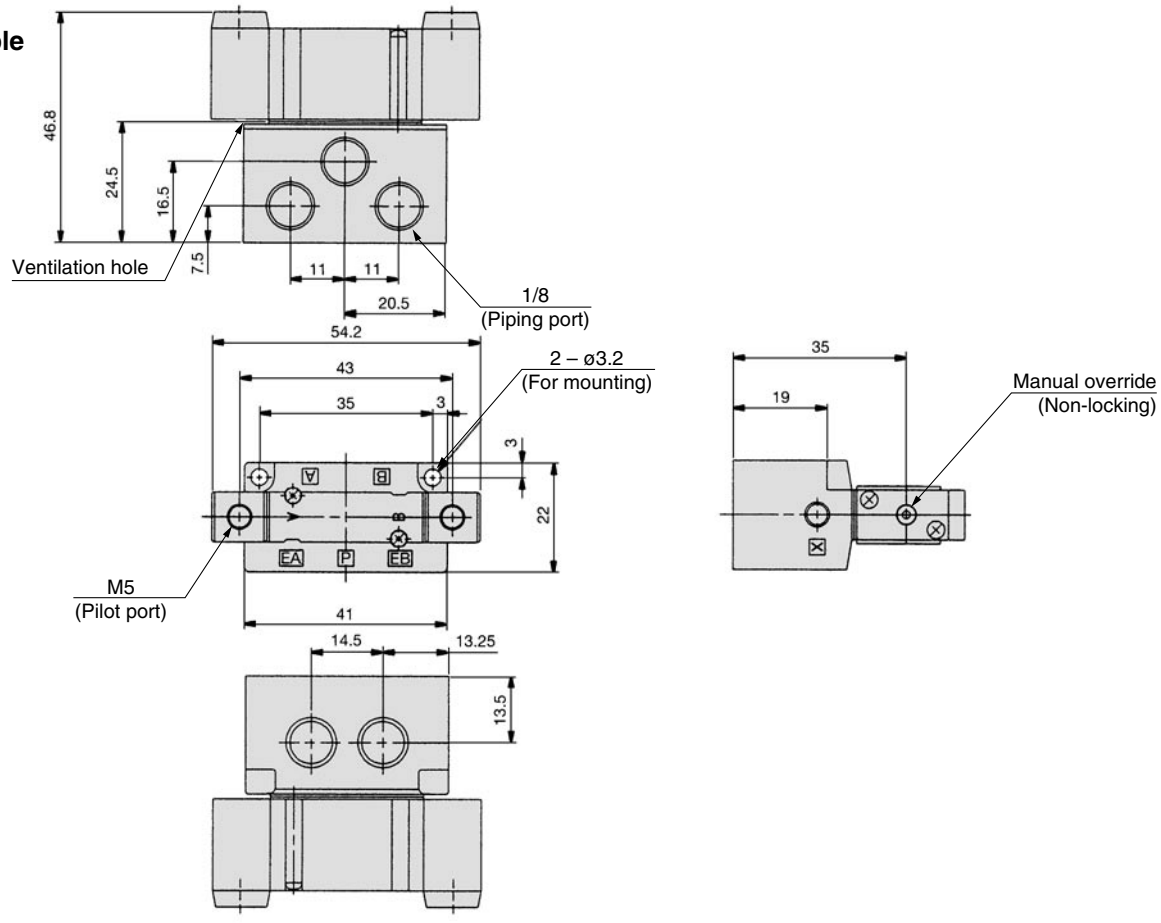

Series SYA3000: Base Mounted

3 position closed center / exhaust center / pressure center

SYA3$^{3}_{5}$40-01□

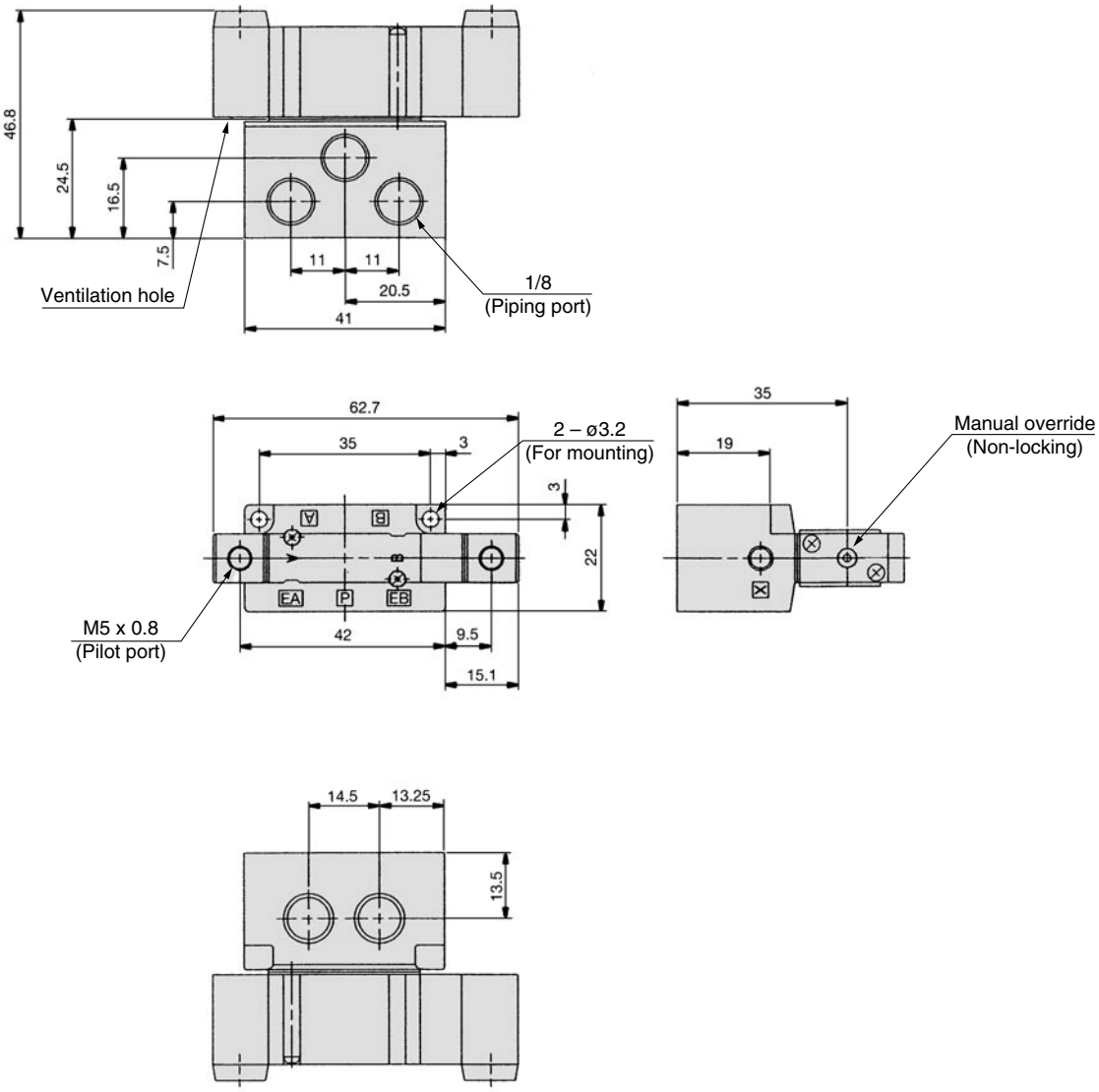

Series SYA5000: Body Ported

2 position single

SYA5120- C4, N3 / C6, N7 / C8, N9 **□(-F2)**

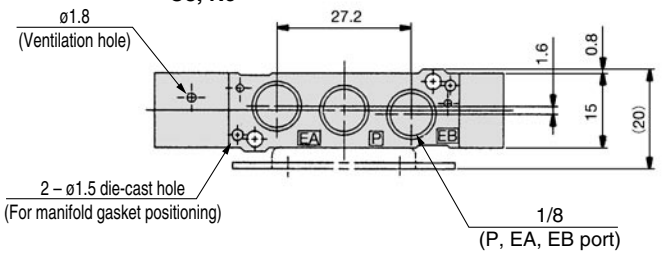

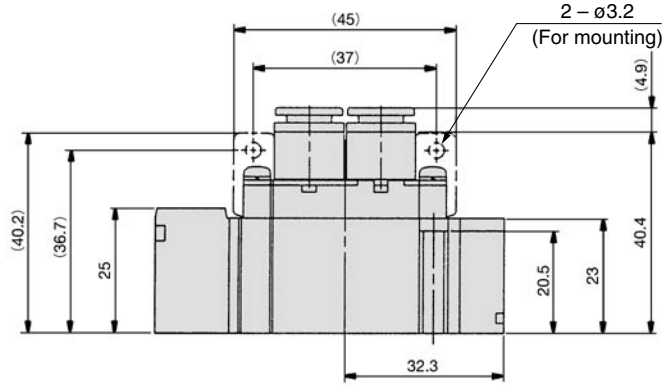

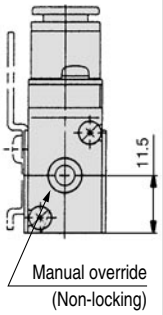

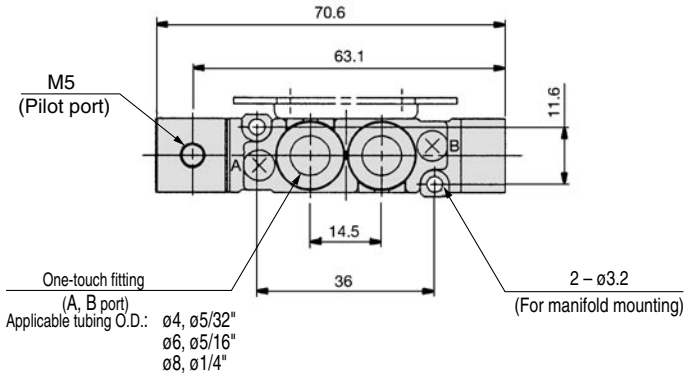

Foot bracket

SYA5120- C4, N3 / C6, N7 / C8, N9 **□-F1**

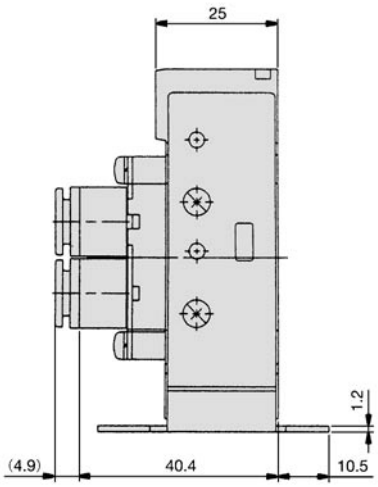

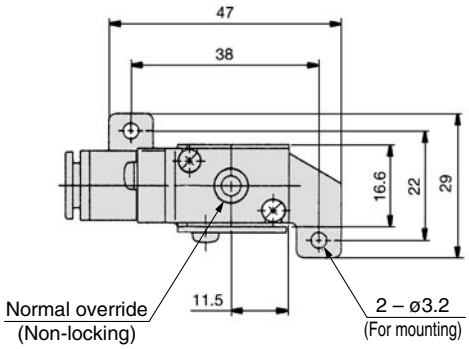

SYA5120-01□

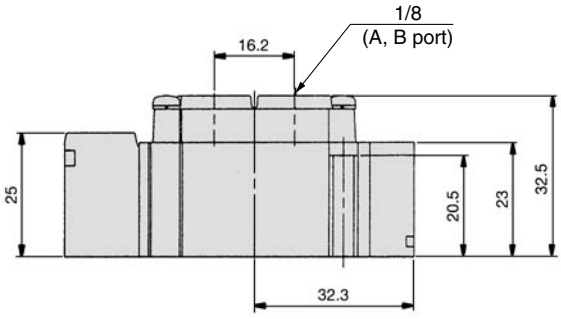

Series SYA5000: Body Ported

2 position double
SYA5220-C4, N3 / C6, N7 / C8, N9 □(-F2)

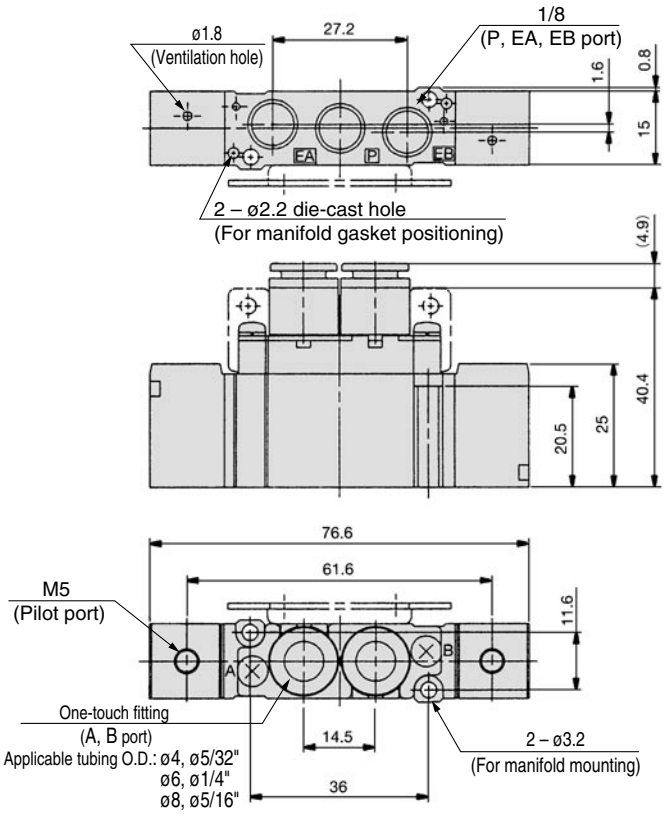

SYA5220-01□

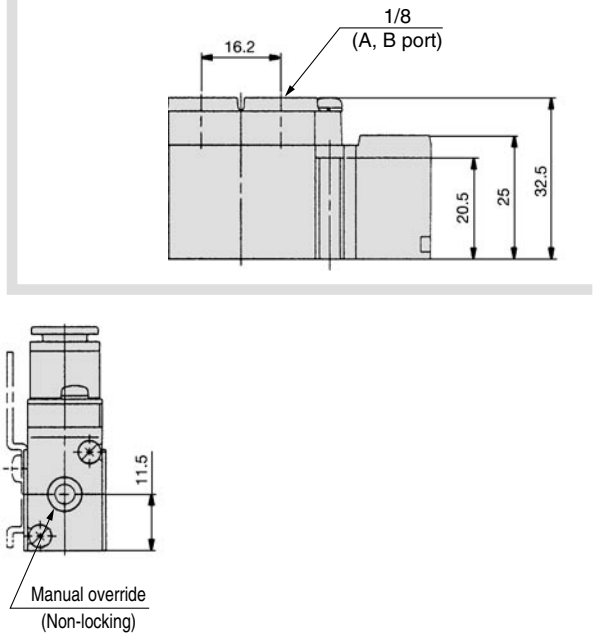

3 position closed center / exhaust center / pressure center
SYA5(3,4)20-C4, N3 / C6, N7 / C8, N9 □(-F2)

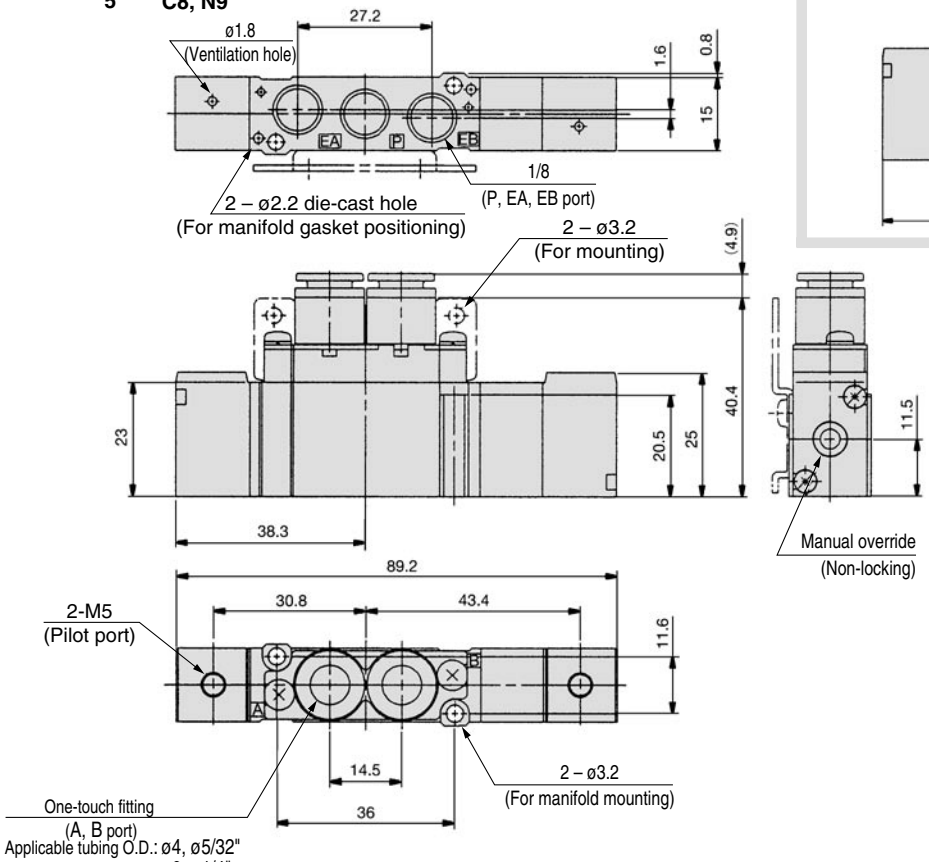

SYA5(3,4)20-01□

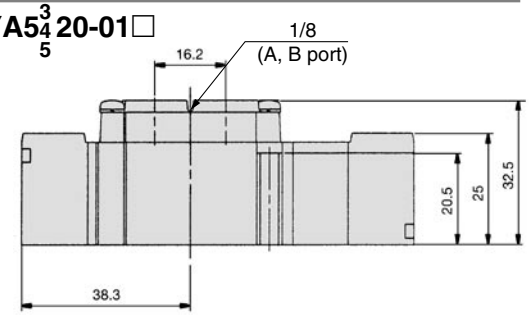

Series SYA5000: Base Mounted

2 position single
SYA5140-02□

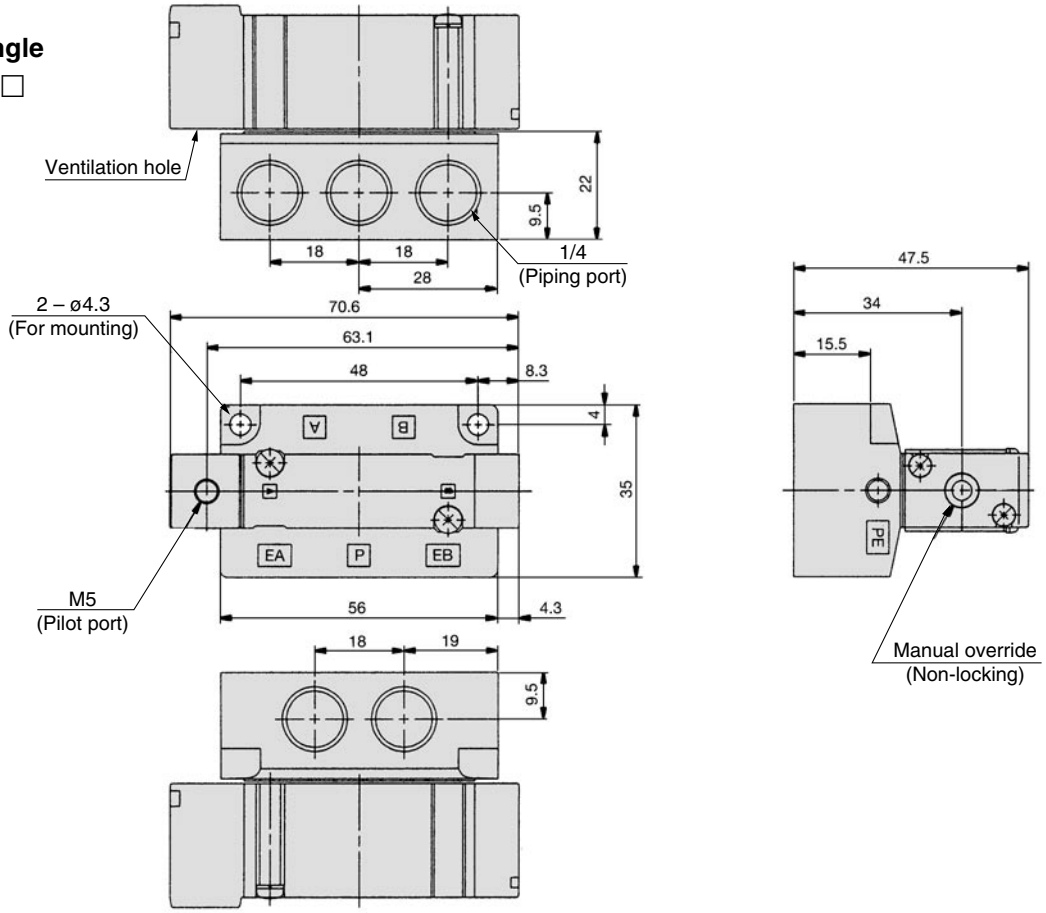

2 position double
SYA5240-02□

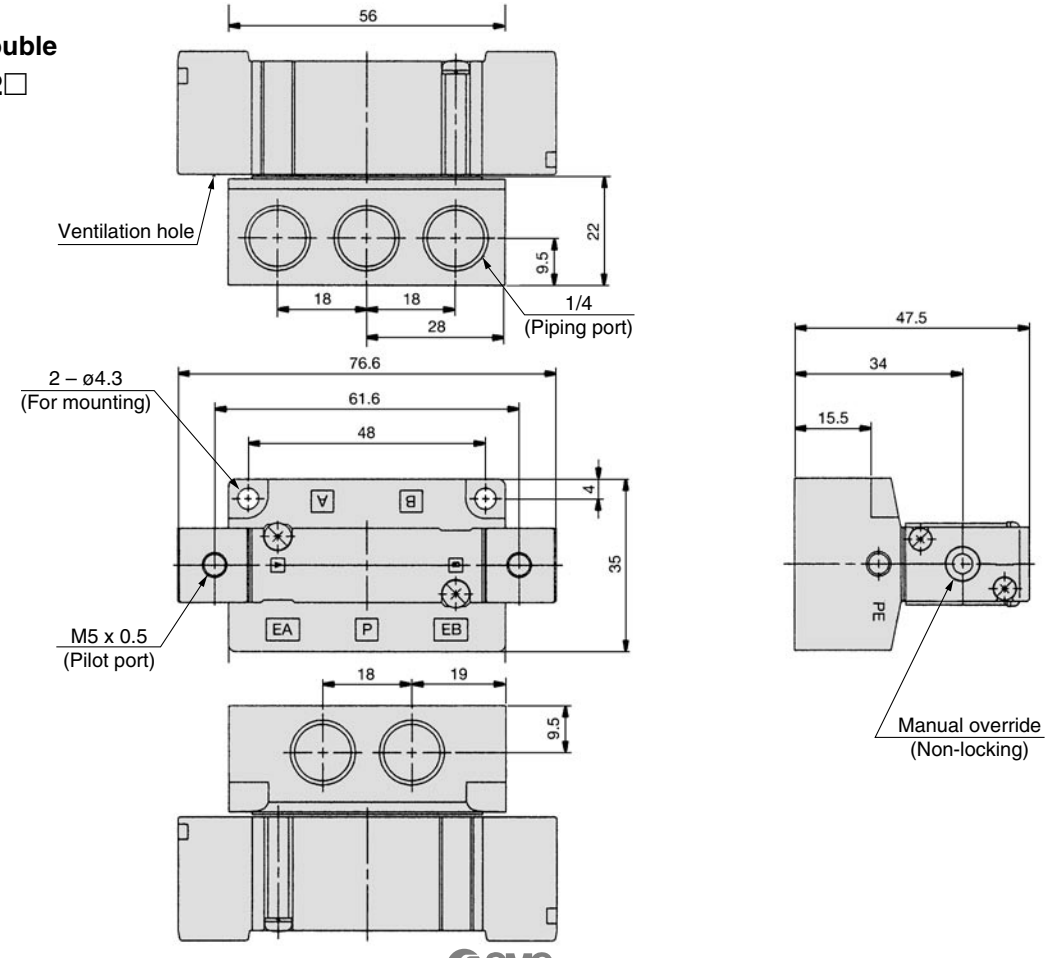

Series SYA5000: Base Mounted

3 position closed center / exhaust center / pressure center
SYA5$^{3}_{4}_{5}$40-02□

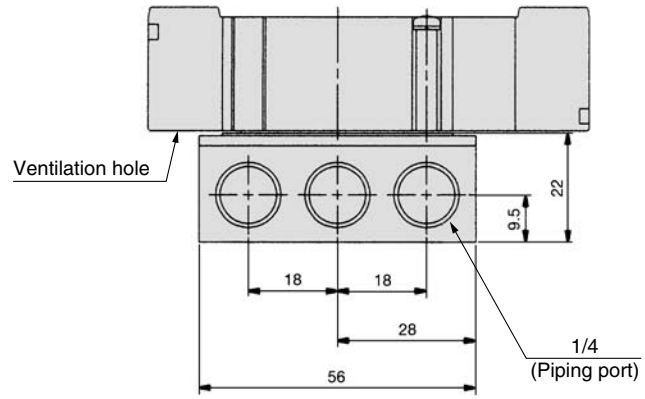

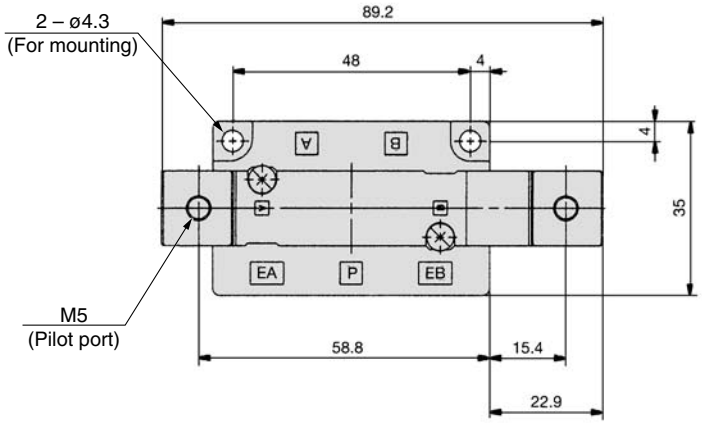

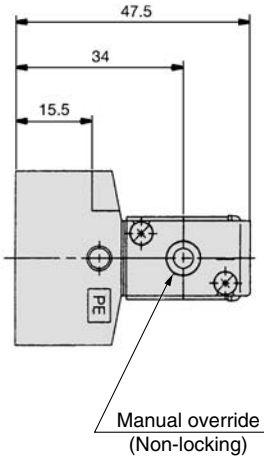

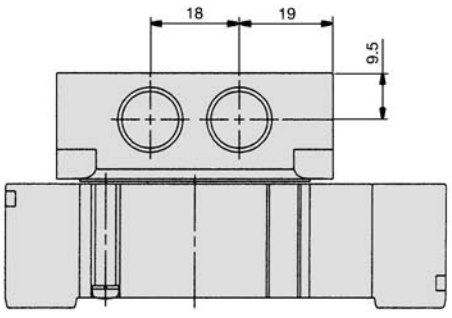

Series SYA7000: Body Ported

2 position single
SYA7120-$^{C8, N9}_{C10, N11}$□(-F2)

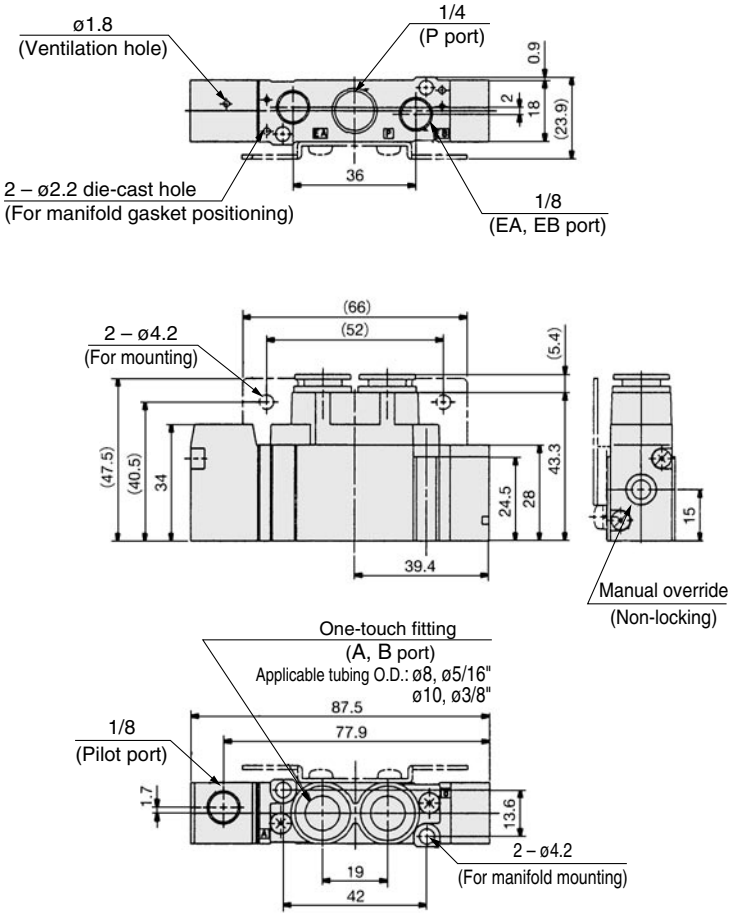

Foot bracket
SYA7120-$^{C8, N9}_{C10, N11}$□-F1

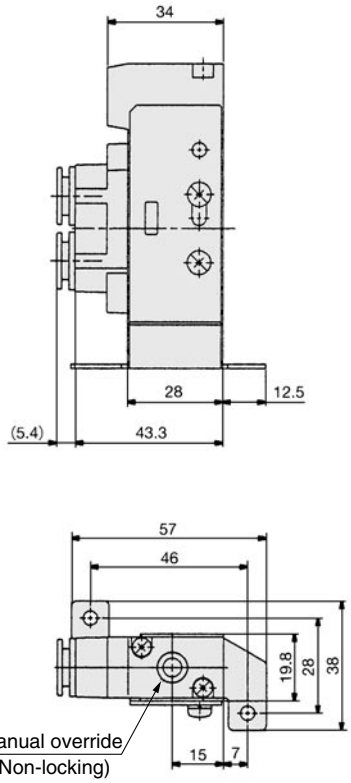

SYA7120-02□

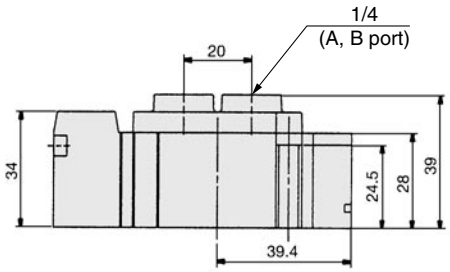

Series SYA7000: Body Ported

2 position double

SYA7220- C8, N9 / C10, N11

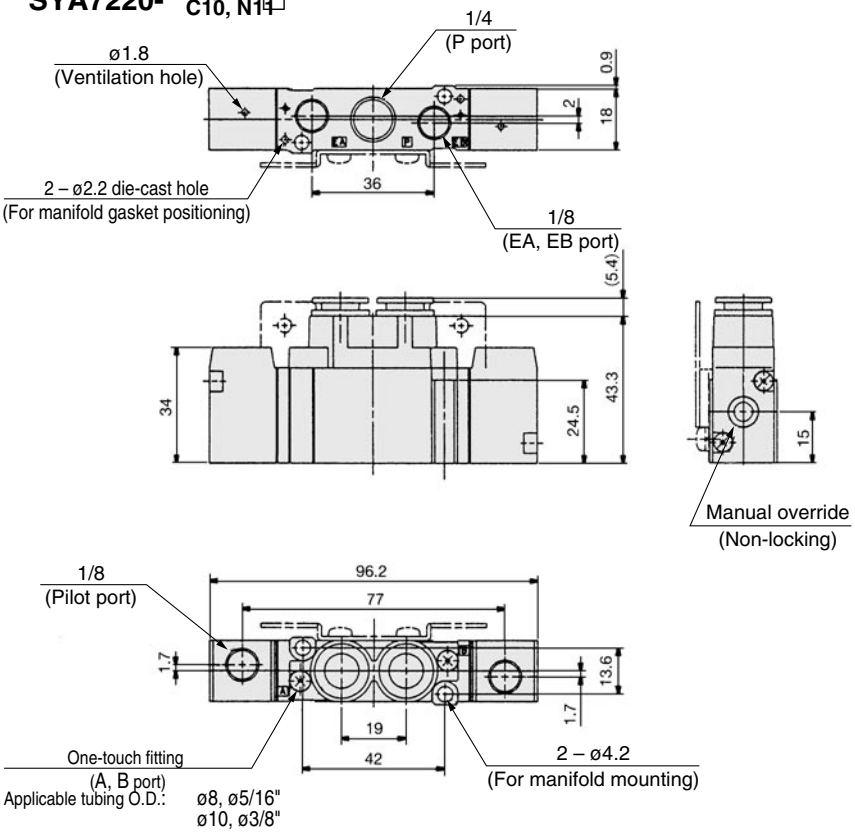

SYA7220-02

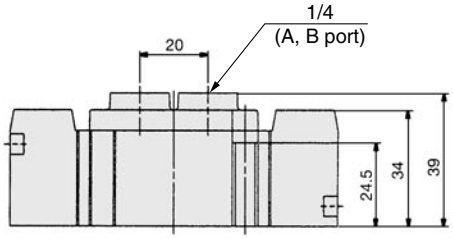

3 position closed center / exhaust center / pressure center

SYA7 20- 3 / 4 / 5 C8, N9 / C10, N11

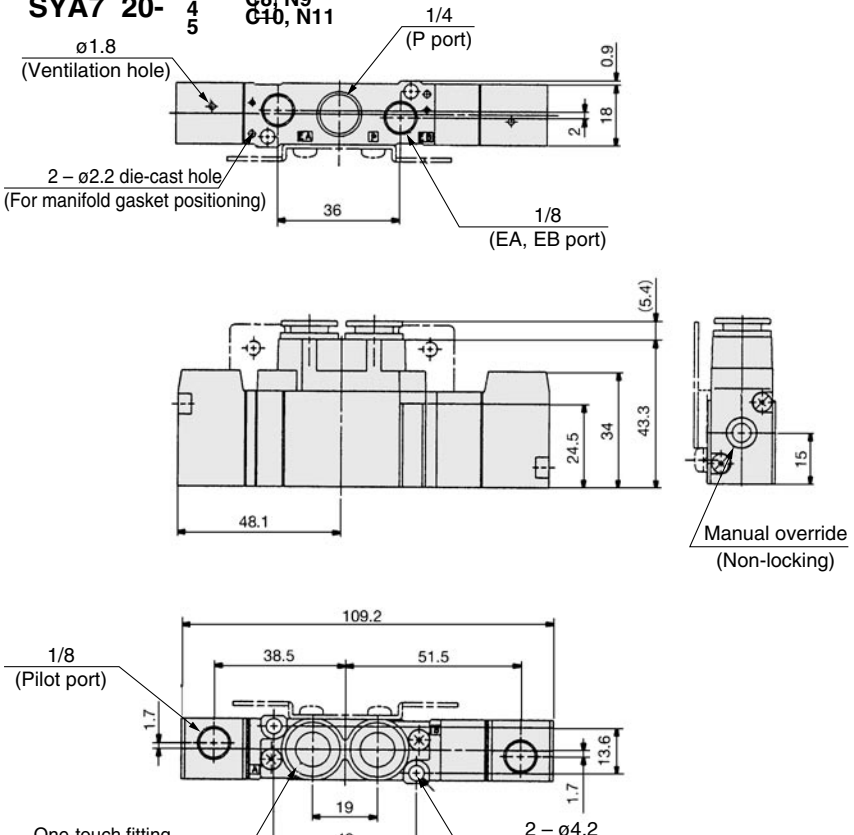

SYA7 3/4/5 20-02□

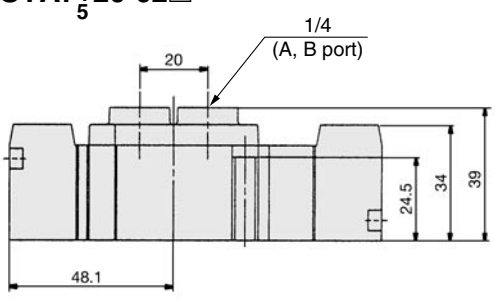

Series SYA7000: Base Mounted

2 position single
SYA7140-$^{02}_{03}$ □

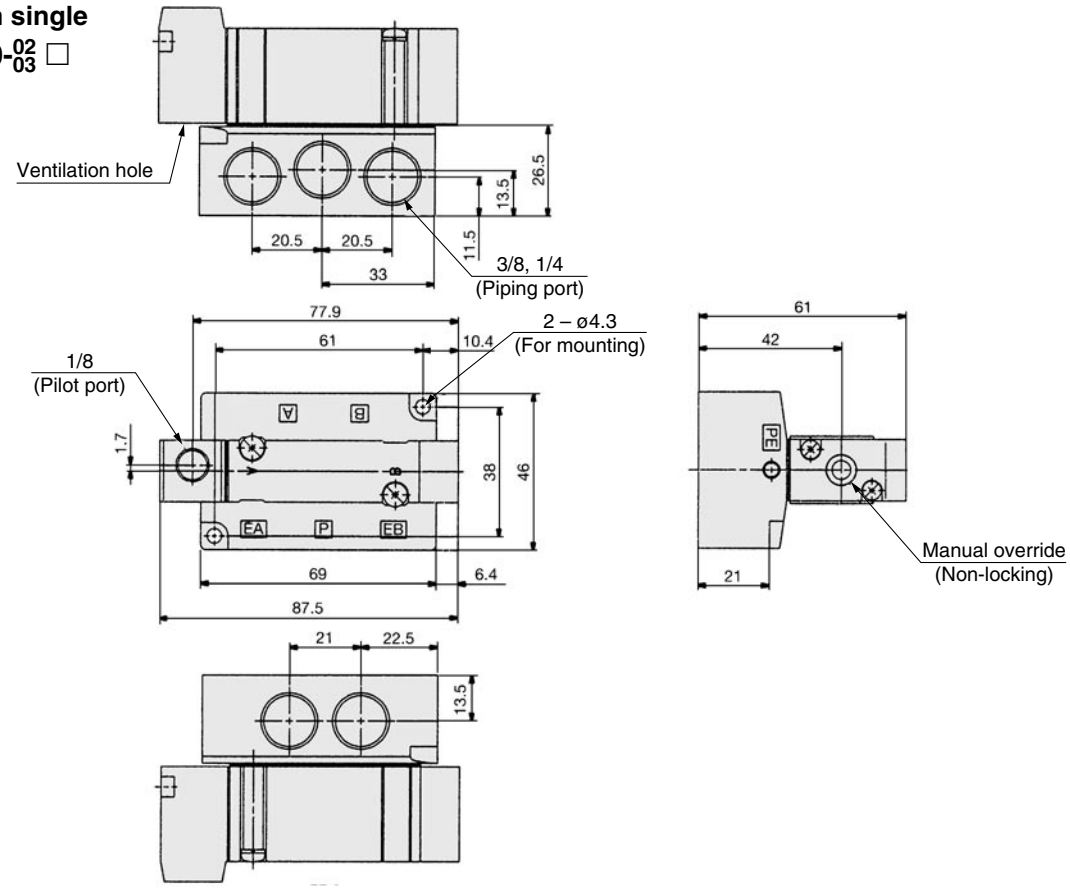

2 position double
SYA7240-$^{02}_{03}$ □

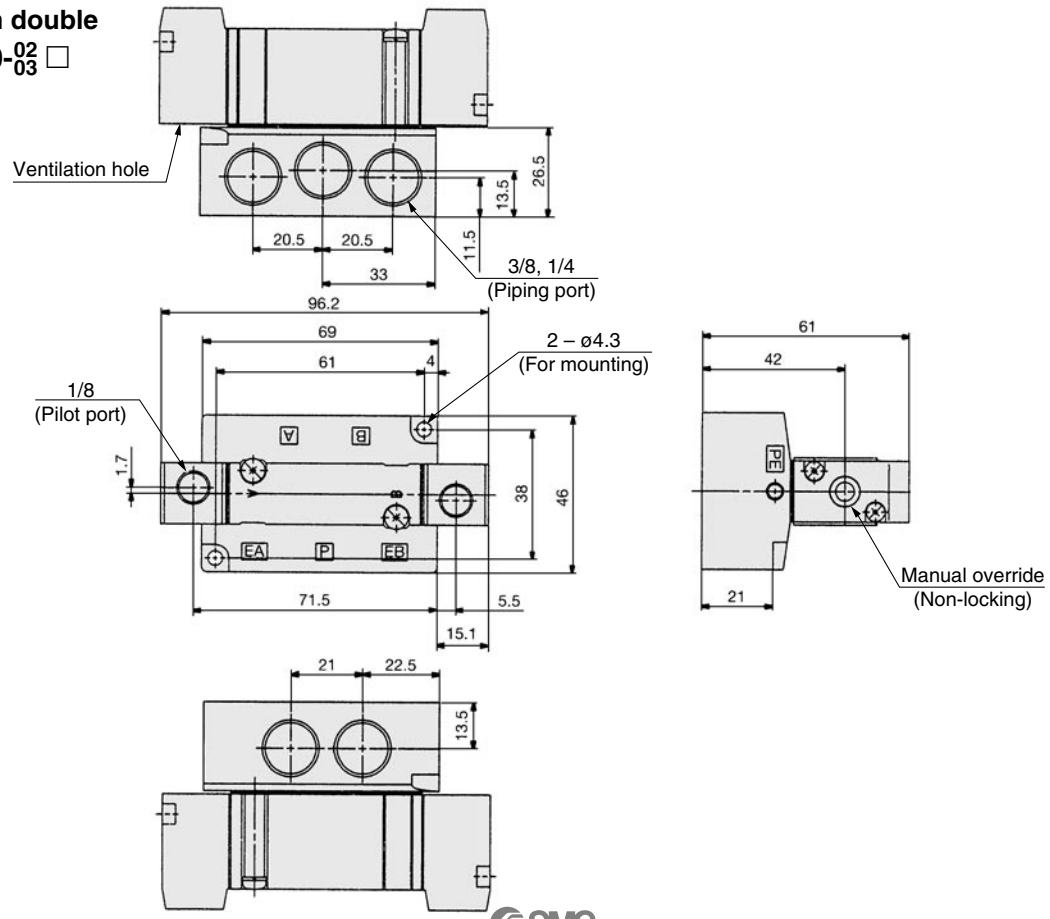

Series SYA7000: Base Mounted

3 position closed center / exhaust center / pressure center

SYA7$^{3}_{4}$40-$^{02}_{03}$ □

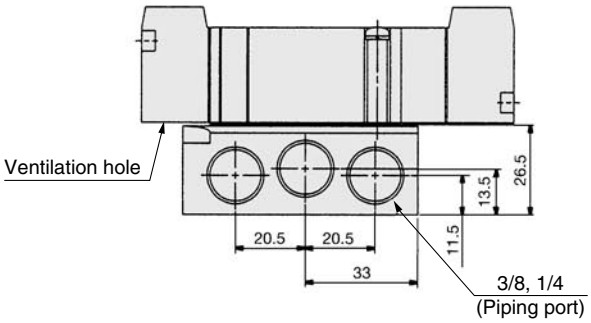

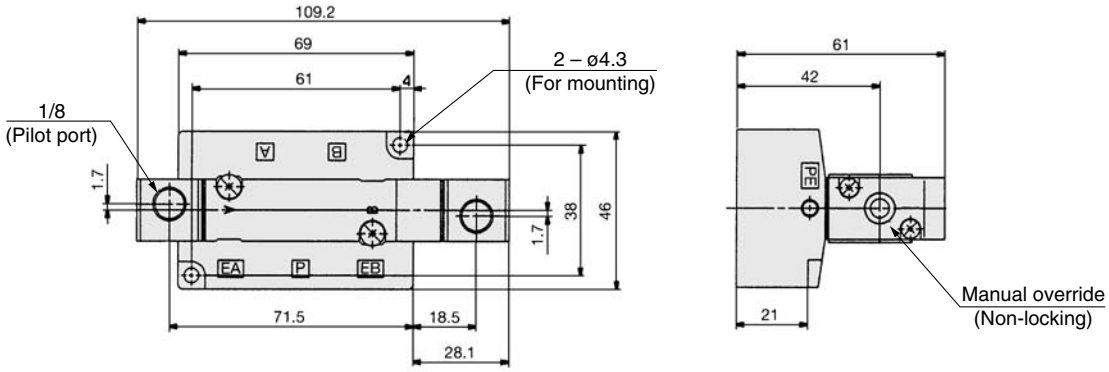

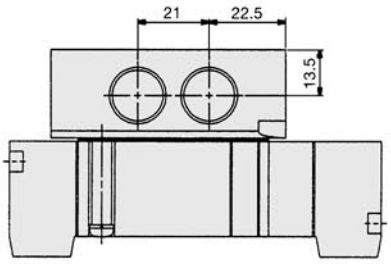

5 Port Solenoid Valve
Series SY3000/5000
Made to Order
External Pilot/Built-in Silencer

Type 45

Made to Order

External pilot manifold bases for low-pressure/vacuum use are added to split style/DIN rail manifolds.
The built-in silencer has materialised a clear-cut appearance.

Individual Wiring/Connector Box Type

How to Order Manifold

Type 45

SS5Y$^{3}_{5}$-45(-A)-[05][U][R]-[C6]-[ ]-Q

Series

3	SY3000
5	SY5000

Valve stations

Symbol	Stations
02	2 stations
⋮	⋮
20	20 stations

The number of blanking plate assembly is included.

SUP/EXH block assembly mounting position

Symbol	Mounting position	Stations
U	U side	2 to 10 stations
D	D side	
B	Both sides	2 to 20 stations
M	Special specifications	

∗ For special specifications, indicate separately by the manifold specification

Option

When a longer DIN rail is desired than the specified stations, specify the station number to be required. (Max. 20 stations)

SUP/EXH block assembly specifications

Symbol	Specifications
R	External pilot specifications
S	Internal pilot/Built-in silencer
RS	External pilot/Built-in silencer

A, B port size

One-touch fitting (Metric size)

Symbol	Port size	Applicable series
C4	One-touch fitting for ø4	SY3000
C6	One-touch fitting for ø6	
M	Mixed	
C4	One-touch fitting for ø4	SY5000
C6	One-touch fitting for ø6	
C8	One-touch fitting for ø8	
M	Mixed	

One-touch fitting (Inch size)

Symbol	Port size	Applicable series
N3	One-touch fitting for ø5/32"	SY3000
N7	One-touch fitting for ø1/4"	
M	Mixed	
N3	One-touch fitting for ø5/32"	SY5000
N7	One-touch fitting for ø1/4"	
N9	One-touch fitting for ø5/16"	
M	Mixed	

∗ In the case of mixed specifications, indicate separately on the manifold specification sheet.

How to Order Valve Manifold Assembly (Example)

Example

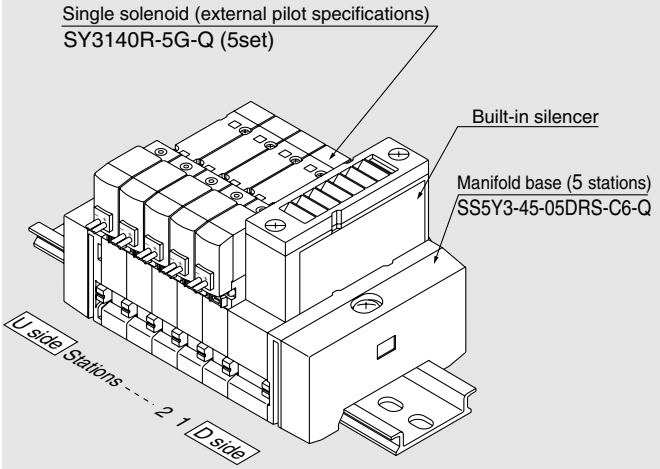

SS5Y3-45-05DRS-C6-Q **1 set (External pilot specification with built-in silencer part no.)**

∗ **SY3140R-5G-Q** **5 sets (Single solenoid part no.)**

→ The asterisk denotes the symbol for assembly.
Prefix it to the part nos. of the solenoid valve, etc.

The valve arrangement is numbered as the 1st. station from D side regardless of the mounting position of SUP/EXH block assembly. In ordering, specify the part nos. in the order from the 1st. station on D side. Besides, when the arrangement will be complicated, fill out the manifold specification sheet to instruct us.
For manifolds with SUP/EXH block assembly at each end of the manifold, external pilot ports and silencers will be also located at each end of the manifold.
The SUP/EXH block assembly (SX3/5000_51_1A), for special usage, as shown on page 125, can also be mounted. Please specify the mounting position, by correctly filling in the blank space on the manifold specification sheet.

How to Order Valve

SY 5 2 40 □ □ – 5 L □ □ -Q

Series

3	SY3000
5	SY5000

Type of actuation

1	2 position single
2	2 position double
3	3 position closed center
4	3 position exhaust center
5	3 position pressure center

Pilot type

-	Internal pilot
R	External pilot

Coil specifications

-	Standard
T	With power saving circuit (24 VDC, 12 VDC only)

∗ Power saving circuit is not available in the case of D, DO or W□ type.

Rated voltage

For DC

5	24 VDC
6	12 VDC
V	6 VDC
S	5 VDC
R	3 VDC

For AC (50/60 Hz)

1	100 VAC
2	200 VAC
3	110 VAC [115 VAC]
4	220 VAC [230 VAC]

∗ DC specifications of Type D and DO is only available with 12 and 24 VDC.
∗ AC specification is only available with D and DO type.
∗ D and DO only available for SY5000.

Light/surge voltage suppressor

Electrical entry for G, H, L, M, W

-	Without light/surge voltage suppressor
S	With surge voltage suppressor
Z	With light/surge voltage suppressor
R	With surge voltage suppressor (Non-polar type)
U	With light/surge voltage suppressor (Non-polar type)

∗ Power saving circuit is only available in the "Z" type.

Electrical entry for D (SY5000 only)

-	Without light/surge voltage suppressor
S	With surge voltage suppressor (Non-polar type)
Z	With light/surge voltage suppressor (Non-polar type)

∗ DOZ is not available.
∗ For AC voltage valves there is no "S" option. It is already built-in to the rectifier circuit.

Manual override

-	Non-locking push type
D	Push-turn locking slotted type
E	Push-turn locking lever type

Electrical entry

24, 12, 6, 5, 3 VDC			24, 12 VDC/ 100, 110, 200, 220 VAC	24, 12, 6, 5, 3 VDC
Grommet	L plug connector	M plug connector	DIN terminal	M8 connector ∗
G: Lead wire length 300 mm **H:** Lead wire length 600 mm	**L:** With lead wire (Length 300 mm) **LN:** Without lead wire **LO:** Without connector	**M:** With lead wire (Length 300 mm) **MN:** Without lead wire **MO:** Without connector	**(SY5000 only)** **D:** With connector **DO:** Without connector	**WO:** Without connector cable **W□:** With connector cable Note 1)

∗ LN, MN type: with 2 sockets.
∗ D and DO only available for SY5000.
∗ DIN terminal type "Y" which conforms to EN-175301-803C (former DIN43650C) is also available. For details, refer to page 210.
∗ Setting "-5LOU" is available only for connector box type.
∗ For connector cable of M8 connector, refer to back page 12.
∗ Connector M8 type "WA" conforming to IEC 60947-5-2 standard, is also available. For details, see page 211.
Note 1) Enter the cable length symbols in □. Please be sure to fill in the blank referring to back page 13.

Plug-in

How to Order Manifold

Type 45□

SS5Y$^{3}_{5}$-45 □ F U 05 U R □ □ □ -Q

Series

3	SY3000
5	SY5000

Common specifications

-	Positive common
N	Negative common

No symbol is used for T, T1, S□ types.

Connector mounting position

Symbol	Mounting position
U	U side
D	D side

Connector type

Symbol	Mounting position
F	D-sub connector
P	Flat ribbon cable 26 pins
PG	Flat ribbon cable 20 pins
PH	Flat ribbon cable 10 pins
T	Terminal block 9 pins
T1	Terminal block 18 pins
S□	Serial Transmission Type

∗ For details, refer to page 135.

Valve stations

Symbol	Stations	Note
02	2 stations	Single wining spec.
⋮	⋮	
20	20 stations	

∗ This also includes the number of blanking plate assemblies.
∗ Depending on the connector, the number of stations is limited. Refer to page 138.
∗ Two stations are necessary for the double, 3 position solenoid valve (Dual body type).

SUP/EXH block assembly mounting position

Symbol	Mounting position	Stations
U	U side	2 to 10 stations
D	D side	
B	(Both sides)	2 to 20 stations
M	Special specifications	

∗ For special specifications, indicate separately by the manifold specification

SUP/EXH block assembly specifications

Symbol	Specifications
R	External pilot specifications
S	Internal pilot/Built-in silencer
RS	External pilot/Built-in silencer

A, B port size

One-touch fitting (Metric size)

Symbol	Port size	Applicable series
C4	One-touch fitting for ø4	SY3000
C6	One-touch fitting for ø6	
M	Mixed	
C4	One-touch fitting for ø4	SY5000
C6	One-touch fitting for ø6	
C8	One-touch fitting for ø8	
M	Mixed	

One-touch fitting (Inch size)

Symbol	Port size	Applicable series
N3	One-touch fitting for ø5/32"	SY3000
N7	One-touch fitting for ø1/4"	
M	Mixed	
N3	One-touch fitting for ø5/32"	SY5000
N7	One-touch fitting for ø1/4"	
N9	One-touch fitting for ø5/16"	
M	Mixed	

∗ In the case of mixed specifications, indicate separately on the manifold specification sheet.

Voltage

-	24 VDC
12V	12 VDC

No symbol is used for T, T1, S□ types.

Option

When a longer DIN rail is desired than the specified stations, specify the station number to be required. (20 stations at maximum)

How to Order Valve Manifold Assembly (Example)

Example

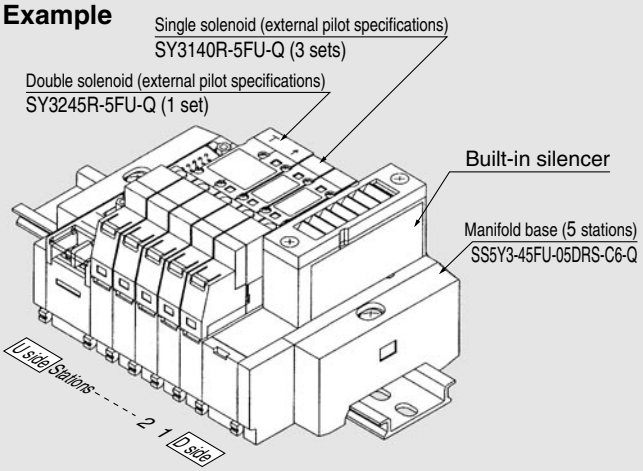

SS5Y3-45FU-05DRS-C6-Q 1 set (External pilot specification with built-in silencer part no.)
∗ SY3140R-5FU-Q 3 sets (Single solenoid part no.)
∗ SY3245R-5FU-Q 1 set (Double solenoid part no.)
→ The asterisk denotes the symbol for assembly. Prefix it to the part nos. of the solenoid valve, etc.

The valve arrangement is numbered as the 1st. station from D side regardless of the mounting position of SUP/EXH block assembly. In ordering, specify the part nos. in the order from the 1st. station on D side. Besides, when the arrangement will be complicated, fill out the manifold specification sheet to instruct us.
For manifolds with SUP/EXH block at each end of the manifold, external pilot ports and silencers will be also located at each end of the manifold.
The SUP/EXH block assembly (SX3/5000_51_1A), for special usage, as shown on page 264, can also be mounted. Please specify the mounting position, by correctly filling in the blank space on the manifold specification sheet.
Two stations of the manifold base are necessary for the double, 3 position (Dual body type). Use caution when specifying the number of stations required for the manifold base.

How to Order Valve

SY 3 1 4 □ □ — 5 FU □ -Q

Series

3	SY3000
5	SY5000

Type of actuation

1	2 position single
2	2 position double
3	3 position closed center
4	3 position exhaust center
5	3 position pressure center

Body Option

0	Standard (Single only)
5	Dual body type (Double, 3 position)

Pilot type

-	Internal pilot
R	External pilot

Rated voltage

5	24 VDC
6	12 VDC
V∗	6 VDC
S∗	5 VDC
R∗	3 VDC

∗ Mark: 45T and T1 only S□ type is available for 24 VDC only.

Manual override

-	Non-locking push type
D	Push-turn locking slotted type
E	Push-turn locking lever type

External Pilot/Built-in Silencer

SY3000: SS5Y3-45-[Stations] DRS-C4, N3 / C6, N7 -Q

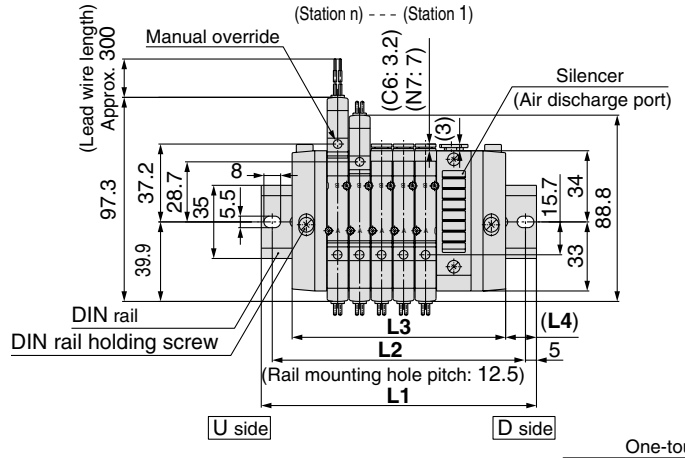

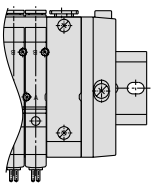



∗ The dimensions **L1** to **L4** are identical to those of **SS5Y3-45-[Stations] U/D/B -C4, N3 / C6, N7 -Q**.

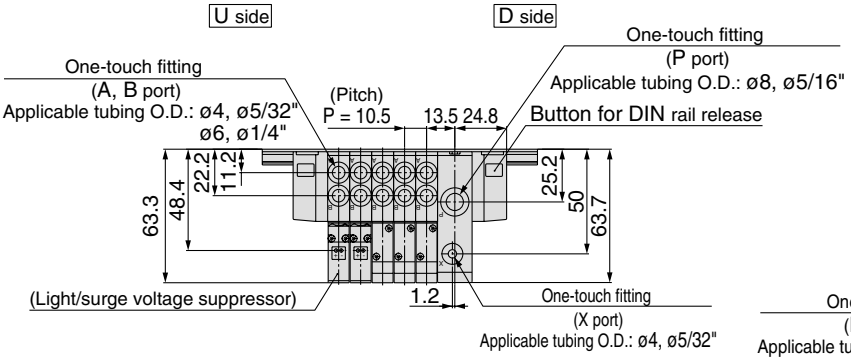

SS5Y3-45-[Stations] DR-C4, N3 / C6, N7 -Q

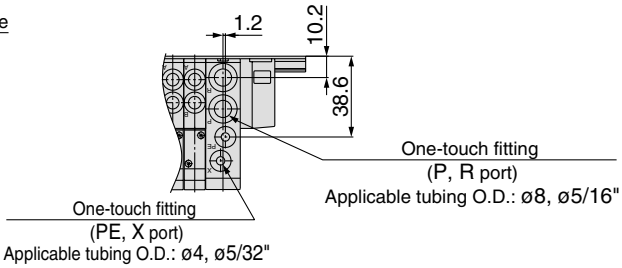

SY5000: SS5Y5-45-[Stations] DRS-C4, N3 / C6, N7 / C8, N9 -Q

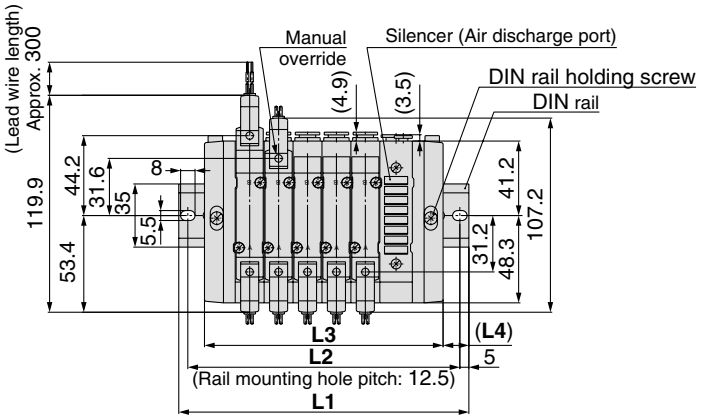

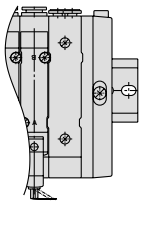



∗ The dimensions **L1** to **L4** are identical to those of **SS5Y3-45-[Stations] U/D/B -C4, N3 / C6, N7 / C8, N9-Q**.

∗ The dimensions of **SS5Y$^{3}_{5}$-45-[Stations] URS-Q** are identical to those of SS5Y$^{3}_{5}$-45F-[Stations] DRS-Q.

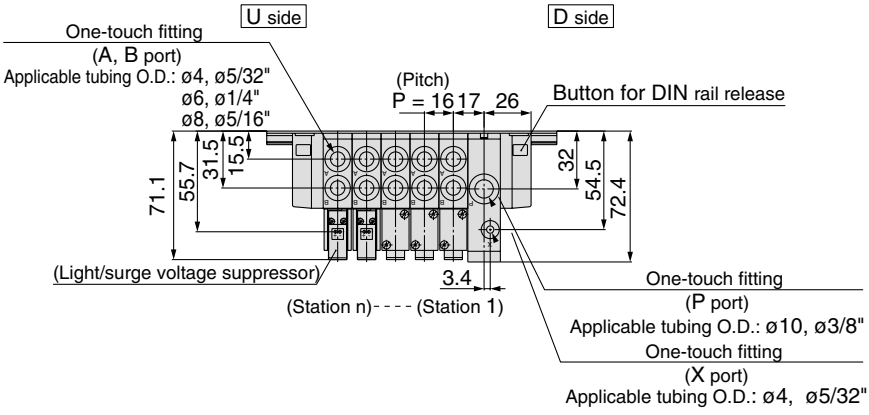

SS5Y5-45-[Stations] DR-C4, N3 / C6, N7 / C8, N9 -Q

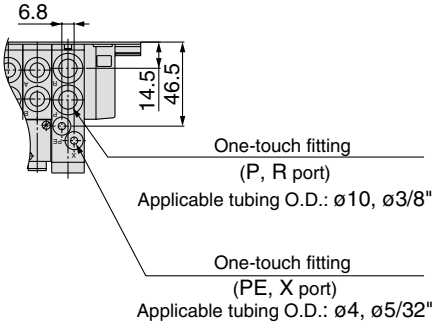

External Pilot/Built-in Silencer

SY3000: SS5Y3-45FU-[Stations]DRS-C4,N3 C6,N7 -Q

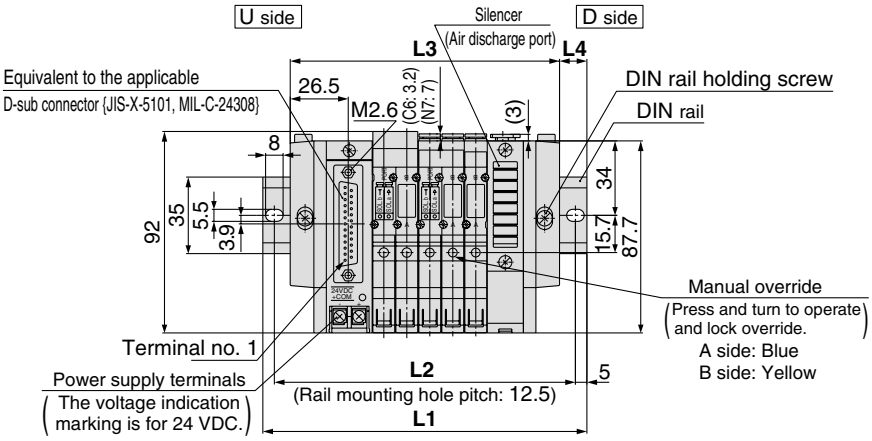

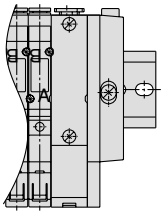

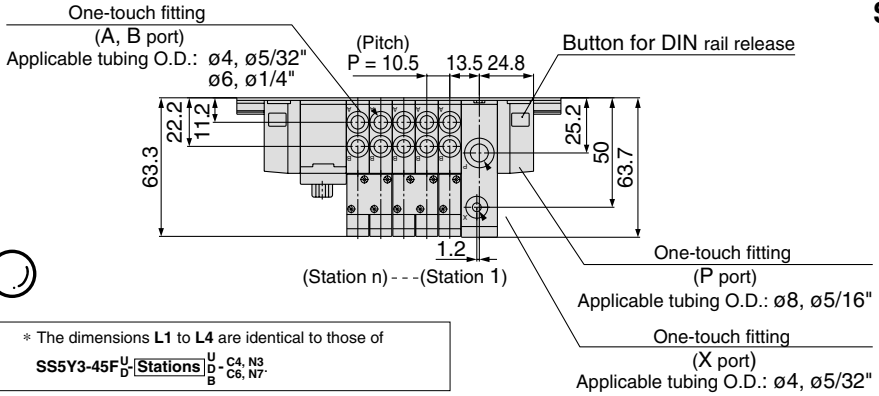

∗ The dimensions **L1** to **L4** are identical to those of **SS5Y3-45F**[U/D]-[Stations][U/D/B]-C4, N3, C6, N7.

SS5Y3-45FU-[Stations]DR-C4,N3 C6,N7 -Q

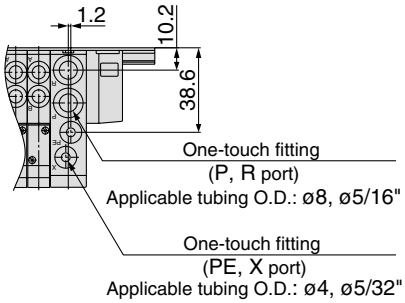

SY5000: SS5Y5-45FU-[Stations]DRS-C4,N3 C6,N7 C8,N9 -Q

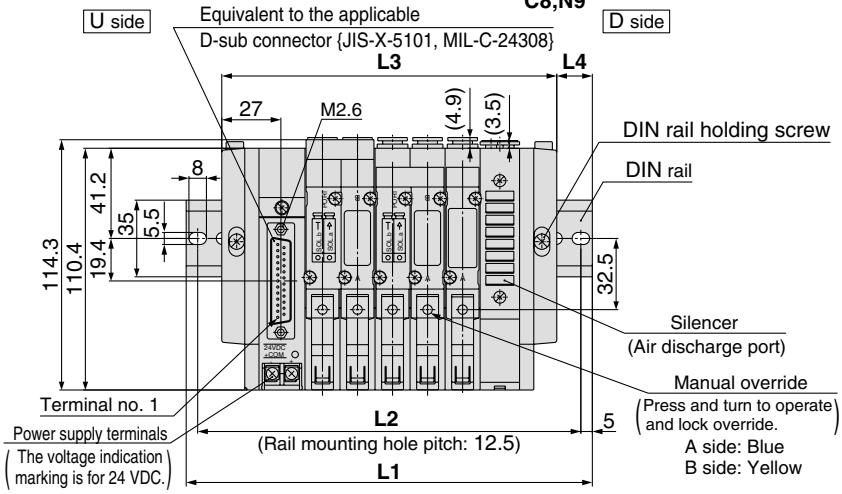

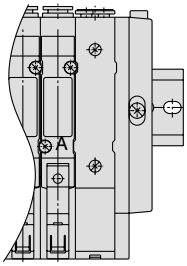

∗ The dimensions **L1** to **L4** are identical to those of **SS5Y3-45F**[U/D]-[Stations][U/D/B]-C4, N3, C6, N7, C8, N9 -Q

∗ The dimensions of **SS5Y**[3/5]**-45-[Stations]URS-Q** are identical to those of SS5Y[3/5]-45-[Stations]DRS-Q.

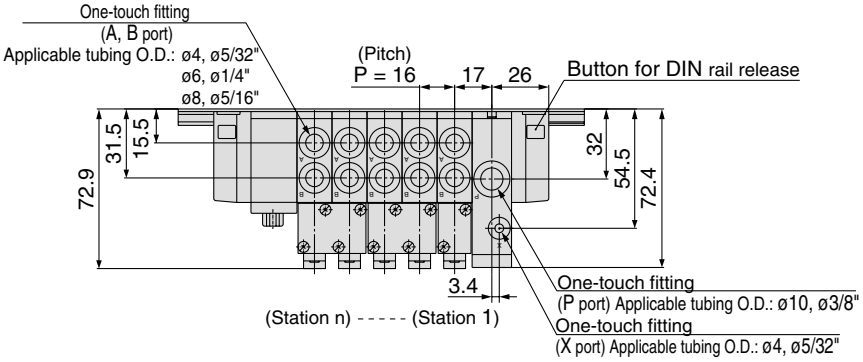

SS5Y5-45FU-[Stations]DR-C4,N3 C6,N7 C8,N9 -Q

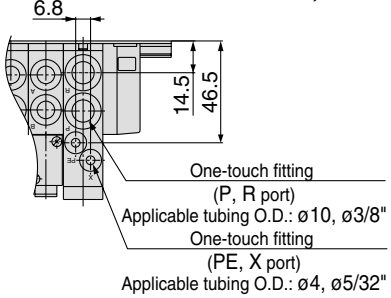

Type M45

5 Port Solenoid Valve
Series SY3000/5000
Made to Order
Mixed Mounting Type

Made to Order

Non plug-in

Use SY3000 together with SY5000, which has a large Cv and is mounted only in a place where it is needed, permits a selection of economic manifold bases.

How to Order Manifold

Type M45 (Mixed mounting style)

SS5Y5 − M45 − 05 U □ − C86 − □ -Q

Mixed mounting style

Valve stations

Symbol	Stations
02	2 stations
⋮	⋮
20	20 stations

The number of blanking plate ass'y is included, too.

SUP/EXH block assembly mounting position

Symbol	Mounting position	Stations
U	U side	2 to 10 stations
D	D side	
B	Both sides	2 to 20 stations
M	Special specifications	

∗ For special specifications, indicate separately by the manifold specification heet.

Option

When a longer DIN rail is desired than the specified stations, specify the station number to be required. (Max. 20 stations)

SUP/EXH block assembly specifications

Symbol	Specifications
-	Standard/Internal pilot specifications
S	Built-in silencer

∗ External pilot specification is unavailable for mixed mounting style.

A, B port size

One-touch fitting (Metric size)

Symbol	Port size
C44	SY5000: One-touch fitting for ø4 SY3000: One-touch fitting for ø4
C46	SY5000: One-touch fitting for ø4 SY3000: One-touch fitting for ø6
C64	SY5000: One-touch fitting for ø6 SY3000: One-touch fitting for ø4
C66	SY5000: One-touch fitting for ø6 SY3000: One-touch fitting for ø6
C84	SY5000: One-touch fitting for ø8 SY3000: One-touch fitting for ø4
C86	SY5000: One-touch fitting for ø8 SY3000: One-touch fitting for ø6
M	Mixed

One-touch fitting (Inch size)

Symbol	Port size
N33	SY5000: One-touch fitting for ø5/32" SY3000: One-touch fitting for ø5/32"
N37	SY5000: One-touch fitting for ø5/32" SY3000: One-touch fitting for ø1/4"
N73	SY5000: One-touch fitting for ø1/4" SY3000: One-touch fitting for ø5/32"
N77	SY5000: One-touch fitting for ø1/4" SY3000: One-touch fitting for ø1/4"
N93	SY5000: One-touch fitting for ø5/16" SY3000: One-touch fitting for ø5/32"
N97	SY5000: One-touch fitting for ø5/16" SY3000: One-touch fitting for ø1/4"
M	Mixed

∗ In the case of mixed specifications, indicate separately on the manifold specification sheet.

How to Order Valve Manifold Assembly (Example)

Example

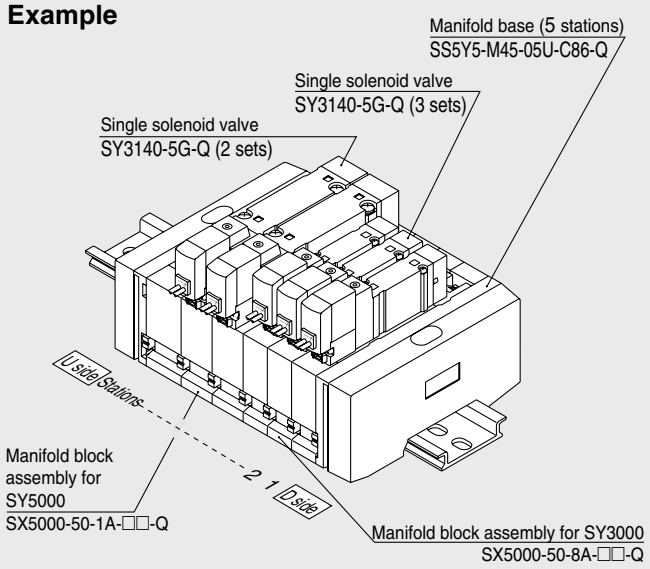

SS5Y5-M45-05U-C86-Q 1 set (Type M45, manifold base part no.)
∗ SY3140-5G-Q 3 sets (Single solenoid part no.)
∗ SY5140-5G-Q 2 sets (Single solenoid part no.)
→ The asterisk denotes the symbol for assembly. Prefix it to the part nos. of the solenoid valve, etc.

The valve arrangement is numbered as the 1st. station from D side regardless of the mounting position of SUP/EXH block assembly. In ordering, specify the part nos. in the order from the 1st. station on D side. Besides, when the arrangement will be complicated, fill out the manifold specification sheet to instruct us.

How to Order Valve

SY 5 2 40 □ − 5 L □ □ -Q

Series

3	SY3000
5	SY5000

Type of actuation

1	2 position single
2	2 position double
3	3 position closed center
4	3 position exhaust center
5	3 position pressure center

Coil specifications

-	Standard
T	With power saving circuit (24 VDC, 12 VDC only)

∗ Power saving circuit is not available in the case of W□ type.

Rated voltage

For DC

5	24 VDC
6	12 VDC
V	6 VDC
S	5 VDC
R	3 VDC

∗ For type W□, DC voltage is only available.

Electrical entry for G, H, L, M, W

-	Without light/surge voltage suppressor
S	With surge voltage suppressor
Z	With light/surge voltage suppressor
R	With surge voltage suppressor (Non-polar type)
U	With light/surge voltage suppressor (Non-polar type)

∗ Power saving circuit is only available in the "Z" type.

Manual override

-	Non-locking push type
D	Push-turn locking slotted type
E	Push-turn locking lever type

Electrical entry

24, 12, 6, 5, 3 VDC			
Grommet	**L plug connector**	**M plug connector**	**M8 connector** ∗
G: Lead wire length 300 mm **H:** Lead wire length 600 mm	**L:** With lead wire (Length 300 mm) **LN:** Without lead wire **LO:** Without connector	**M:** With lead wire (Length 300 mm) **MN:** Without lead wire **MO:** Without connector	**WO:** Without connector cable **W□:** With connector cable Note 1)

∗ LN, MN type: with 2 sockets.
∗ For connector cable of M8 connector, refer to back page 12.
∗ Connector M8 type "WA" conforming to IEC 60947-5-2 standard, is also available. For details, see page 211.
Note 1) Enter the cable length symbols in □. Please be sure to fill in the blank referring to back page 13.

Dimensions: Mixed Mounting

SS5Y5-M45- Stations U-□-Q

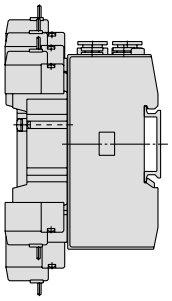

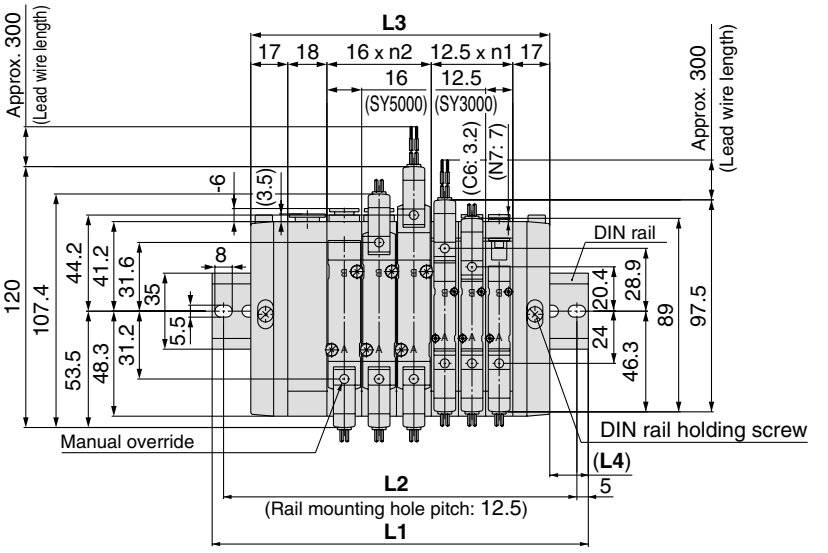

L dimension: Formulae for L1, L4
L3 = 12.5 x n1 + 16 x n2 + 52
M = ($\frac{L3}{12.5}$ + 1) Omit decimals
L1 = 12.5 x M + 23
L2 = L1–10.5
L4= (L1–L3) /2

n1 = Number of SY3000
n2 = Number of SY5000

Note) The **L1** to **L4** dimensions of **SS5Y5-M45- Stations D-Q** are identical to those of SS5Y5-M45- Stations U-Q.

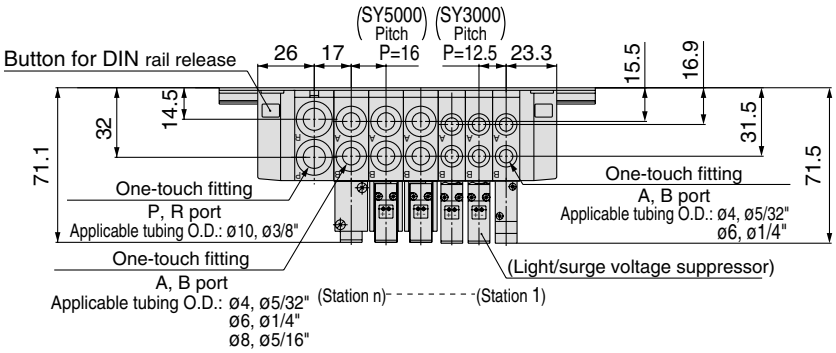

SS5Y5-M45- Stations B-□-Q

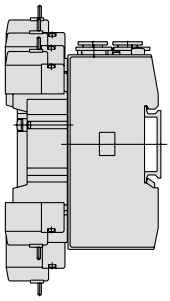

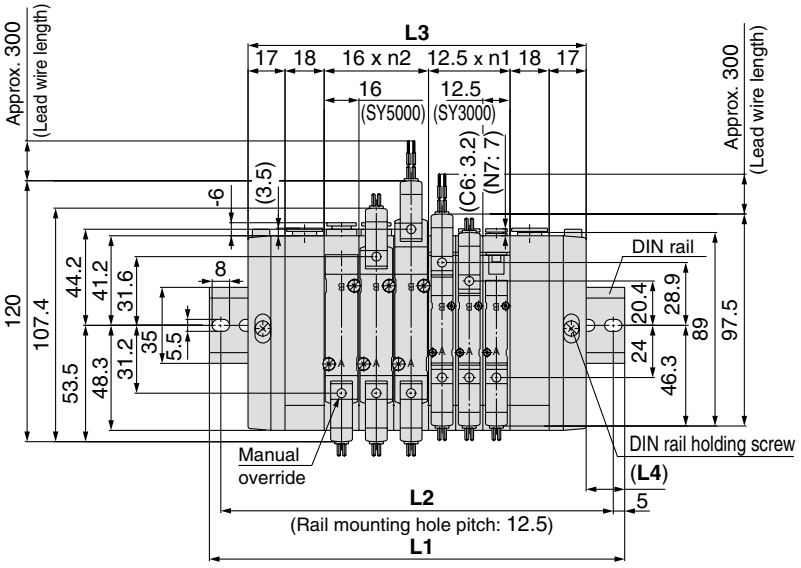

L dimension: Formulae for L1, L4
L3 = 12.5 x n1 + 16 x n2 + 70
M= ($\frac{L3}{12.5}$ + 1) Omit decimals
L1 = 12.5 x M + 23
L2 = L1 – 10.5
L4 = (L1 – L3)/2

n1 = Number of SY3000
n2 = Number of SY5000

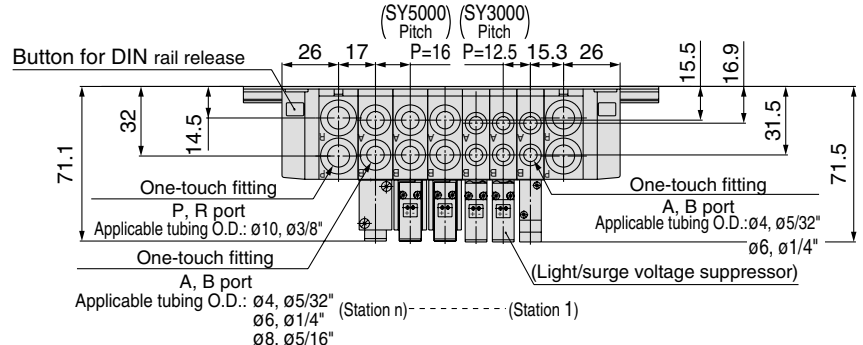

5/3 Port Solenoid Valve
Series SY5000/7000/9000, SY500
Made to Order
DIN Connector Conforming to EN-175301-803C (former DIN 43650C)

Made to Order

DIN connector type that conforms to the 8-mm pitch standards between DIN terminals.

How to Order Valve

3 port valve (5 port valve mixed mounting style) **SY 5 1 3 □ – 5 Y □ □ – □ □ -Q**

5 port valve SY 5 2 2 0 □ – 5 Y □ □ – □ □ -Q

Series

5	SY500

Type of actuation

1	Normally open
2	Normally closed

Type of actuation

3	Body ported
5	Base mounted

A port size

Symbol	Port size
-	Base mounted
01	1/8
C4	One-touch fitting for ø4
C6	One-touch fitting for ø6
C8	One-touch fitting for ø8
N3	One-touch fitting for ø5/32"
N7	One-touch fitting for ø1/4"
N9	One-touch fitting for ø5/16"

Thread type

-	Rc
F	G
N	NPT
T	NPTF

Series

5	SY5000
7	SY7000
9	SY9000

Pilot type

-	Internal pilot
R*	External pilot

* Base mounted type only.

Electrical entry

Y: With connector

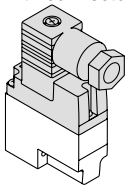

YO: Without connector

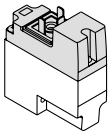

Rated voltage

For DC

5	24 VDC
6	12 VDC

For AC (50/60 Hz)

1	100 VAC
2	200 VAC
3	110 VAC [115 VAC]
4	220 VAC [230 VAC]

Type of actuation

1	2 position single
2	2 position double
3	3 position closed center
4	3 position exhaust center
5	3 position pressure center

Body type

2	Body ported
4	Base mounted
6	Body ported, cassette type

Note) SY9000 series is not available with body ported cassette type.

Note) When placing an order for body ported solenoid valve as a single unit, mounting bolt for manifold and gasket are not attached. Order them separately, if necessary. (For details, refer to page 56.)

Light/surge voltage suppressor

-	Without light/surge voltage suppressor
S	With surge voltage suppressor
Z	With indicator light and surge voltage suppressor

* YOZ is not available.
* For AC voltage valves there is no "S" option. It is already built-in to the rectifier circuit.

Manual override

-	Non-locking push type
D	Push-turn locking slotted type
E	Push-turn locking lever type

A, B port size

For body ported
Thread piping

Symbol	Port size	Applicable series
01	1/8	SY5000
02	1/8	SY7000
03	3/8	SY9000

One-touch fitting (Metric size)

Symbol	Port size	Applicable series
C4	One-touch fitting for ø4	SY5000
C6	One-touch fitting for ø6	
C8	One-touch fitting for ø8	
C8	One-touch fitting for ø8	SY7000
C10	One-touch fitting for ø10	
C8	One-touch fitting for ø8	SY9000
C10	One-touch fitting for ø10	
C12	One-touch fitting for ø10	

One-touch fitting (Inch size)

Symbol	Port size	Applicable series
N3	One-touch fitting for ø5/32"	SY5000
N7	One-touch fitting for ø1/4"	
N9	One-touch fitting for ø5/16"	
N9	One-touch fitting for ø5/16"	SY7000
N11	One-touch fitting for ø3/8"	
N9	One-touch fitting for ø5/16"	SY9000
N11	One-touch fitting for ø3/8"	

For Base Mounted

Symbol	Port size	Applicable series
-	Without sub-plate	
02	1/4 With sub-plate	SY5000 SY7000
03	3/8 With sub-plate	SY7000 SY9000
04	1/2 With sub-plate	SY9000

How to Order Pilot Valve Assembly

V115 – 5 Y □

Rated voltage

For DC

5	24 VDC
6	12 VDC

For AC (50/60 Hz)

1	100 VAC
2	200 VAC
3	110 VAC [115 VAC]
4	220 VAC [230 VAC]

Light/surge voltage suppressor

-	Without light/surge voltage suppressor
S	With surge voltage suppressor
Z	With light/surge voltage suppressor

* YOZ is not available.
* For AC voltage valves there is no "S" option. It is already built-in to the rectifier circuit.

Electrical entry

Y	DIN terminal	With connector
YO		Without connector

DIN Connector Part No.

Without light	SY100-82-1

With light

Rated voltage	Voltage symbol	No.
24 VDC	24VN	SY100-82-3-05
12 VDC	12VN	SY100-82-3-06
100 VAC	100VN	SY100-82-3-01
200 VAC	200VN	SY100-82-3-02
110 VAC (115 VAC)	110VN	SY100-82-3-03
220 VAC (230 VAC)	220VN	SY100-82-3-04

⚠Caution

1. Use caution in wiring because it won't meet the IP65 (enclosure) standard if you use cord other than the prescribed heavy-duty cord of size (ø3.5 to ø7.5). Also be sure to tighten the ground nut and holding screw with the prescribed torque range. Tighten the ground nut and set screw within the specified range of torque. For how to use DIN terminal (wiring procedures, procedures for changing electrical entries, precautions, applicable cable circuit diagram), refer to back page 9.
2. D type DIN connector with 9.4 mm pitch between terminals if not interchangeable.
3. To distinguish from the D type DIN connector, "N" is listed at the end of voltage symbol. (For connector parts without lights, "N" is not indicated. Please refer to the name plate to distinguish.)
4. Dimensions are completely the same as D type DIN connector.
5. When exchanging the pilot valve assembly only, "V115-□D" is interchangeable with "V115-□Y". Do not replace V114 (G, L, M) to SY115 (DIN terminal), and vice versa.

Made to Order Specifications:
Series SY3000/5000/7000/9000, SY300/500
M8 Connector Conforming to **IEC60947-5-2**

Made to Order

M8 Connector type conforming to **IEC60947-5-2** standard.

How to Order Valve

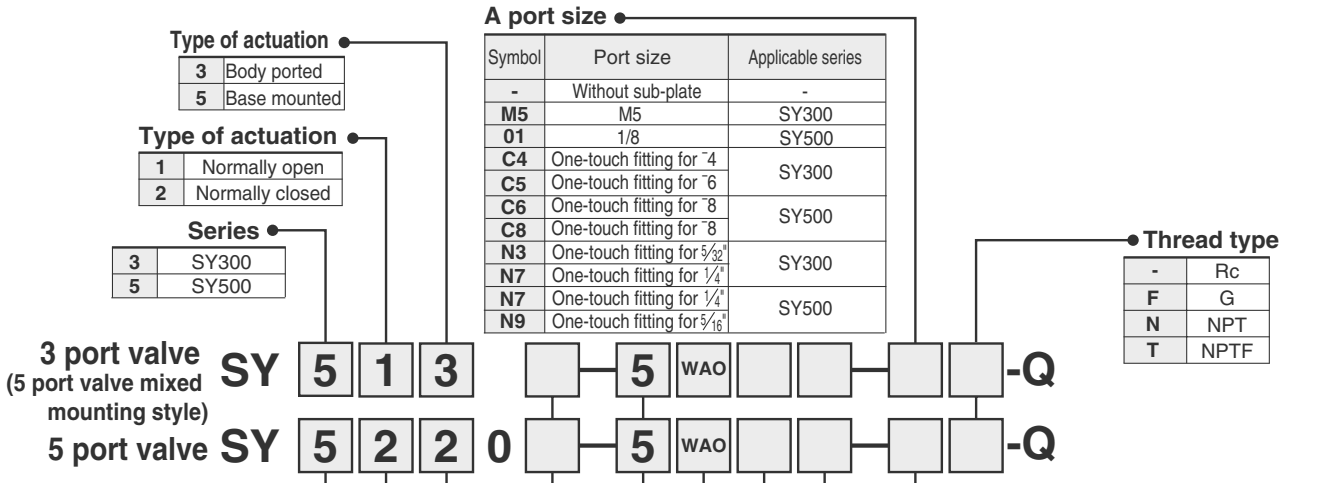

Type of actuation

3	Body ported
5	Base mounted

Type of actuation

1	Normally open
2	Normally closed

Series

3	SY300
5	SY500

A port size

Symbol	Port size	Applicable series
-	Without sub-plate	-
M5	M5	SY300
01	1/8	SY500
C4	One-touch fitting for ¯4	SY300
C5	One-touch fitting for ¯6	
C6	One-touch fitting for ¯8	SY500
C8	One-touch fitting for ¯8	
N3	One-touch fitting for 5/32"	SY300
N7	One-touch fitting for 1/4"	
N7	One-touch fitting for 1/4"	SY500
N9	One-touch fitting for 5/16"	

Thread type

-	Rc
F	G
N	NPT
T	NPTF

Series

3	SY3000
5	SY5000
7	SY7000
9	SY9000

Type of actuation

1	2 position single
2	2 position double
3	3 position closed centre
4	3 position exhaust centre
5	3 position pressure centre

Body type

2	Body ported
4	Base mounted
6	Body ported, cassette type

Note) SY9000 series is not available with body ported cassette type.

Pilot type

-	Internal pilot
R	External pilot

∗Base mounted type only.

Rated voltage

For DC	
5	24 VDC
6	12 VDC
V	6 VDC
S	5 VDC
R	3 VDC

Electrical entry

WA: With connector cable
WAO: Without connector cable

Note: ☐ is for cable length. Please refer to Specific Product Precautions 8.

Light/surge voltage suppressor

-	Without light/surge voltage suppressor
S	With surge voltage suppressor
Z	With indicator light and surge voltage suppressor
R	With surge voltage suppressor (Non-polar type)
U	With indicator light and surge voltage suppressor (Non-polar type)

Manual override

-	Non-locking push type
D	Push-turn locking slotted type
E	Push-turn locking lever type

A, B port size

For body ported
Thread piping

Symbol	Port size	Applicable series
M5	M5	SY3000
01	1/8	SY5000
02	1/8	SY7000
03	3/8	SY9000

One-touch fitting (Metric size)

Symbol	Port size	Applicable series
C4	One-touch fitting for ¯4	SY3000
C6	One-touch fitting for ¯6	
C4	One-touch fitting for ¯4	SY5000
C6	One-touch fitting for ¯6	
C8	One-touch fitting for ¯8	
C8	One-touch fitting for ¯8	SY7000
C10	One-touch fitting for ¯10	
C8	One-touch fitting for ¯8	SY9000
C10	One-touch fitting for ¯10	
C12	One-touch fitting for ¯10	

One-touch fitting (Inch size)

Symbol	Port size	Applicable series
N3	One-touch fitting for ¯5/32"	SY3000
N7	One-touch fitting for ¯1/4"	
N3	One-touch fitting for ¯5/32"	SY5000
N7	One-touch fitting for ¯1/4"	
N9	One-touch fitting for ¯5/16"	
N9	One-touch fitting for ¯5/16"	SY7000
N11	One-touch fitting for ¯3/8"	
N9	One-touch fitting for ¯5/16"	SY9000
N11	One-touch fitting for ¯3/8"	

For Base Mounted

Symbol	Port size	Applicable series
-	Without sub-plate	
01	1/8 With sub-plate	SY3000
02	1/4 With sub-plate	SY5000 SY7000
03	3/8 With sub-plate	SY7000 SY9000
04	1/2 With sub-plate	SY9000

Note) When placing an order for body ported solenoid valve as a single unit, mounting bolt for manifold and gasket are not attached. Order them separately, if necessary. (For details, refer to page 56.)

How to Order Pilot Valve Assembly



Rated voltage

For DC	
5	24 VDC
6	12 VDC
V	6 VDC
S	5 VDC
R	3 VDC

Electrical entry

WAO	Without connector cable
WA☐	With connector cable

Note: ☐ is for cable length. Please refer to Specific Product Precautions 8.

Light/surge voltage suppressor

-	Without light/surge voltage suppressor
S	With surge voltage suppressor
Z	With light/surge voltage suppressor
R	With surge voltage suppressor (Non-polar type)
U	With light/surge voltage suppressor (Non-polar type)

5 Port Solenoid Valve
Series SY3000/5000/7000/9000
Made to Order Body Ported
External Pilot/Fluoro Rubber for Main Value

Made to Order

Body Ported External Pilot

Applicable solenoid valves: Series SY3□$^{2}_{6}$0, SY5□$^{2}_{6}$0, SY7□$^{2}_{6}$0

Model no. SY$^{3}_{5}_{7}$ $^{2}_{6}$0 – □□□□ – □ – □ – X20-Q

● **Entry is the same as standard products.**

Operating pressure range (MPa)

Operating pressure range	–100 kPa to 0.7
Pilot pressure range	0.25 to 0.7

Dimensions: For SY3□$^{20}_{60}$60, SY5□$^{20}_{60}$60, SY7□$^{20}_{60}$60

Dimensions SY3000 becomes 6.5 mm longer
SY5000 and SY7000 becomes 10 mm longer.

External pilot port

Series	Port size
SY3000	M3
SY$^{5}_{7}$000	M5

Dimensions: For SY3□60, SY5□60, SY7□60

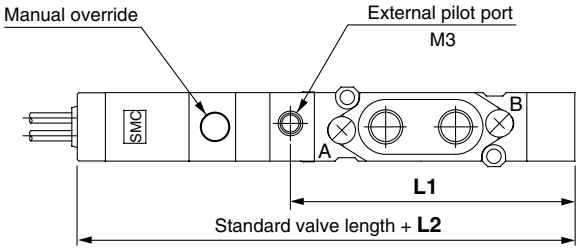

Dimentions/External Pilot Port Position

Series	**L1** dimensions	**L2** dimensions
SY3000	41.5	6.5
SY5000	60.4	9
SY7000	71.9	9

JIS Symbol

Body ported

2 position single

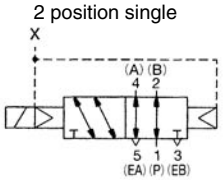

3 position closed center

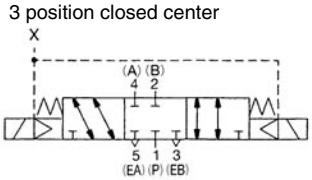

2 position double

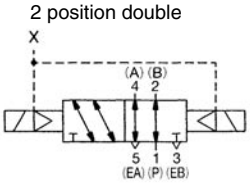

3 position exhaust center

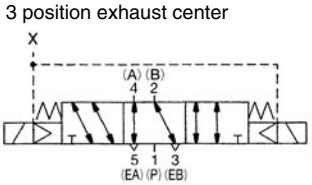

3 position pressure center

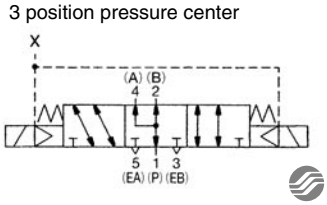

Main Valve Fluoro Rubber Specifications

Fluoro rubber is used for rubber parts of the main valve to allow use in applications such as the following.

- When using a lubricant other than the recommended turbine oil, and there is a possibility of malfunction due to swelling of the spool valve seals.

Applicable solenoid valves: Series SY3□$^{2}_{4}_{6}$0, SY5□$^{2}_{4}_{6}$0, SY7□$^{2}_{4}_{6}$0, SY9□$^{2}_{4}$0

Model no. SY$^{3}_{5}_{7}_{9}$ $^{20}_{40}_{60}$ – □□□□ – □ – □ – X90-Q

● **Entry is the same as standard products.**
Specifications and performance are the same as standard products.

Series SY
Safety Instructions

These safety instructions are intended to prevent a hazardous situation and/or equipment damage. These instructions indicate the level of potential hazard by a label of **"Caution", "Warning"** or **"Danger"**. To ensure safety, be sure to observe ISO 4414 Note 1), JIS B 8370 Note 2) and other safety practices.

⚠ Caution: Operator error could result in injury or equipment damage.

⚠ Warning: Operator error could result in serious injury or loss of life.

⚠ Danger: In extreme conditions, there is a possible result of serious injury or loss of life.

Note 1) ISO 4414: Pneumatic fluid power — General rules relating to systems.
Note 2) JIS B 8370: General Rules for Pneumatic Equipment

⚠ Warning

1. The compatibility of pneumatic equipment is the responsibility of the person who designs the pneumatic system or decides its specifications.

Since the products specified here are used in various operating conditions, their compatibility for the specific pneumatic system must be based on specifications or after analysis and/or tests to meet your specific requirements. The expected performance and safety assurance will be the responsibility of the person who has determined the compatibility of the system. This person should continuously review the suitable of all items specified, referring to the latest catalogue information with a view to giving due consideration to any possibility of equipment failure when configuring a system.

2. Only trained personnel should operate pneumatically operated machinery and equipment.

Compressed air can be dangerous if an operator is unfamiliar with it. Assembly, handling or repair of pneumatic systems should be performed by trained and experienced operators.

3. Do not service machinery/equipment or attempt to remove components until safety is confirmed.

1. Inspection and maintenance of machinery/equipment should only be performed once measures to prevent falling or runaway of the driven objects have been confirmed.
2. When equipment is to be removed, confirm the safety process as mentioned above. Cut the supply pressure for this equipment and exhaust all residual compressed air in the system.
3. Before machinery/equipment is restarted, take measures to prevent shooting-out of cylinder piston rod, etc.

4. Contact SMC if the product is to be used in any of the following conditions:

1. Conditions and environments beyond the given specifications, or if product is used outdoors.
2. Installation on equipment in conjunction with atomic energy, railway, air navigation, vehicles, medical equipment, food and beverages, recreation equipment, emergency stop circuits, clutch and brake circuits in press applications, or safety equipment.
3. An application which has the possibility of having negative effects on people, property, or animals, requiring special safety analysis.

4/5 Port Solenoid Valves/Common Precautions 1

Be sure to read before handling.

Design

⚠ Warning

1. Actuator drive

When an actuator, such as a cylinder, is to be driven using a valve, take appropriate measures to prevent potential danger caused by actuator operation

2. Intermediate stopping

When a 3 position closed center valve is used to stop a cylinder at an intermediate position, accurate stopping of the piston in a predetermined position is not possible due to the compressibility of air. Furthermore, since valves and cylinders are not guaranteed for zero air leakage, it may not be possible to hold a stopped position for an extended length of time. Contact SMC if it is necessary to hold a stopped position for an extended time.

3. Effect of back pressure when using a manifold

Use caution when valves are used on a manifold, as actuator malfunction due to back-pressure may occur.

Special caution must be taken when using 3 position exhaust center valve or when driving a single acting cylinder. To prevent a malfunction, implement counter measures such as using a single EXH spacer assembly or an individual exhaust manifold.

4. Holding of pressure (including vacuum)

Since valves are subject to air leakage, they cannot be used for applications such as holding pressure (including vacuum) in a pressure vessel.

5. Cannot be used as an emergency shut off valve, etc.

The valves presented in this catalogue are not designed for safety applications such as an emergency shut off valve. If the valves are used in this type of system, other reliable safety assurance measures should also be adopted.

6. Maintenance space

The installation should allow sufficient space for maintenance activities (removal of valve, etc.).

7. Release of residual pressure

Provide a residual pressure release function for maintenance purpose. Especially in case of 3 position closed center valve or perfect valve, ensure the release of residual pressure between valve and cylinder.

8. Vacuum applications

When a valve is used for vacuum switching, etc., take measures against the suction of external dust or other contaminants from vacuum pads and exhaust ports, etc. Moreover, an external pilot type valve should be used in this case. Contact SMC in case of an internal pilot type or air operated valve, etc.

9. About using the double solenoid type

When using the double solenoid type for the first time, actuators may travel in an unexpected direction depending on the switching position of a valve. Implement countermeasures not to occur any danger by the actuator's operation.

Design

10. About ventilation

When it is used inside a sealed control panel, etc., provide ventilation to prevent a pressure increase caused by exhausted air inside the control panel or temperature rise caused by the heat generated by valve.

Selection

⚠ Warning

1. Confirm the specification

The products presented in this catalogue are designed only for use in compressed air systems (including vacuum). Do not operate at pressures or temperatures, etc., beyond the range of specifications, as this can cause damage or malfunction. (Refer to specifications.)

Contact SMC when using a fluid other than compressed air (including vacuum).

2. Extended periods of continuous energisation

- Continuous energisation of the valve for extended periods of time may have an adverse effect on the solenoid valve performance and the peripheral equipment due to temperature rises caused by the heat generation of the coil. Consult with SMC if valves will be continuously energised for extended periods of time or the energised period per day will be longer than the de-energised period. It is also possible to shorten the energisation period by using valves of the N.O. (normally open) type.
- When solenoid valves are mounted in a control panel, employ measures to radiate excess heat, so that temperatures remain within the valve specification range. Use special caution when three or more stations sequentially aligned on the manifold are continuously energised since this will cause a drastic temperature rise.
  (As for AC specifications, since the applicable merchandises are ready to provide separately, contact SMC.)

4/5 Port Solenoid Valves/Common Precautions 2

Be sure to read before handling.

Selection

⚠ Caution

1. Momentary energisation

If a double solenoid valve will be operated with momentary energisation, it should be energised for at least 0.1 second. However, depending on the secondary load conditions, it should be energised until the cylinder reaches the stroke end position, as there is a possibility of malfunction otherwise.

2. Leakage voltage

When using a resistor in parallel with the switching element or using a C-R element (surge voltage suppressor) for protection of the switching element, note that leakage voltage will increase due to leakage current flowing through the resistor or C-R element. Limit the amount of residual leakage voltage to the following values:

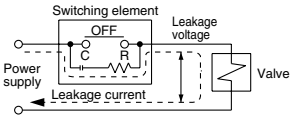

DC coil Should be 3% or less of the rated voltage

AC coil Should be 8% or less of the rated voltage

3. Solenoid valve drive for AC with solid state output (SSR, TRIAC output, etc.)

1) Voltage leakage

When using a snubber circuit (C-R element) for surge protection of the output element, very small electric current will still continue to flow in spite of the OFF state. This results in the valve not returning. In the cases when exceeding the tolerance as shown above, take measures to install a bleeder resistor.

2) Minimum allowable load (Min. load current)

When the consumption current of a valve is equal or less than the output element's the minimum allowable load volume or the margin is small, the output element may not be switched normally. Please confirm SMC.

4. Surge voltage suppressor

If a surge protection circuit contains non-ordinary diodes such as Varistor, a residual voltage that is in proportion to the protective elements and the rated voltage will remain. Therefore, give consideration to surge voltage protection of the controller. In the case of diodes, the residual voltage is approximately 1 V.

5. Low temperature operation

Unless otherwise indicated in the specifications for each valve, operation is possible to –10°C, but appropriate measures should be taken to avoid solidification or freezing of drainage and moisture, etc.

6. Using for air blow

When using a solenoid valve for air blow, use an external pilot type.Take note that when internal pilots and external pilots are used on the same manifold, the pressure drop caused by the air blowing can have an effect on the internal pilot type valves.

Moreover, when compressed air within the pressure range of the established specifications is supplied to the external pilot port, and a double solenoid valve is used for air blowing, the solenoids should normally be energised when air is being blown.

Selection

7. Mounting orientation

Rubber seal: Refer to the specifications of each series.

Mounting

⚠ Warning

1. If air leakage increases or equipment does not operate properly, stop operation.

Check mounting conditions when air and power supplies are connected. Initial function and leakage tests should be performed after installation.

2. Instruction manual

Mount and operate the product after reading the manual carefully and understanding its contents.

Also keep the manual where it can be referred to as necessary.

3. Painting and coating

Warnings or specifications printed or pasted on the product should not be erased, removed or covered up.

Consult with SMC if paint is to be applied to resinous parts, as this may have an adverse effect due to the paint solvent.

Piping

⚠ Caution

1. Preparation before piping

Before piping is connected, it should be thoroughly blown out with air (flushing) or washed to remove chips, cutting oil and other debris from inside the pipe.

2. Wrapping of sealant tape

When connecting pipes and fittings, etc., be sure that chips from the pipe thread and sealing materials do not get inside the valve. Furthermore, when pipe tape is used, leave 1.5 to 2 thread ridges exposed at the end of the threads.

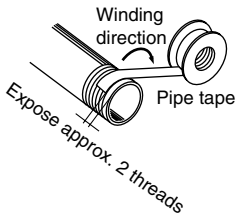

3. Closed center valves

When using closed center type valves, check carefully to be sure there are no air leaks from the piping between the valves and cylinders.

Back page 3

4/5 Port Solenoid Valves/Common Precautions 3

Be sure to read before handling.

Piping

⚠Caution

4. Screwing in

When connecting fittings to valves, tighten as indicated below.

1) For M3, M5 types

1. When using SMC fittings, follow the guidelines below.
   After tightening by hand, tighten an additional 1/4 (M3), 1/6 (M5) turn with a tightening tool. However, if miniature fittings are used, tighten an additional 1/4 turn with a tightening tool after tightening by hand. For fittings with gaskets in 2 locations, e.g., universal elbow or universal tee, tighten an additional 1/2 turn.

Note) If fittings are over-tightened, air leakage may result due to breaking of fitting threads or deformation of the gaskets. However, if fittings are not tightened sufficiently, loosening of the threads and air leakage and may occur.

2. When fittings other than SMC fittings are used, follow the instructions of the respective fitting manufacturer.

2) For Rc threads

Fasten with the proper tightening torques as shown below.

Tightening Torque for Piping

Connection threads	Proper tightening torque N·m
1/8	7 to 9
1/4	12 to 14
3/8	22 to 24
1/2	28 to 30
3/4	28 to 30
1	36 to 38
11/4	40 to 42
11/2	48 to 50
2	48 to 50

5. Connection of piping to products

When connecting piping to a product, refer to its instruction manual to avoid mistakes regarding the supply port, etc.

Wiring

⚠Caution

1. Polarity

When connecting power to a DC specification solenoid valve equipped with (indicator light) surge voltage suppressor, confirm whether or not there is polarity. If there is polarity, take note of the following points.

Without built-in diode to protect polarity (including any power saving circuit):

If a mistake is made regarding polarity, the diode in the valve, the control device switching element or power supply equipment, etc., may burn out.

With diode to protect polarity:

If a mistake is made regarding polarity, it will not be possible to switch the valve.

Wiring

2. Applied voltage

When electric power is connected to a solenoid valve, be careful to apply the proper voltage. Improper voltage may cause malfunction or burn out the coil.

3. Confirm the connections.

After completing the wiring, confirm that the connections are correct.

Lubrication

⚠Caution

1. Lubrication

[Rubber seal]

1. The valve has been lubricated for life at the factory, and does not require any further lubrication.
2. In the event that it is lubricated, use class 1 turbine oil (without additives), ISO VG32.
   However, once lubrication is applied it must be continued, as loss of the original lubricant may lead to malfunction.
   Contact SMC regarding class 2 turbine oil (with additives), ISO VG32.

Air Supply

⚠Warning

1. Use clean air.

Do not use compressed air which contains chemicals, synthetic oils containing organic solvents, salts or corrosive gases, etc., as this can cause damage or malfunction.

⚠Caution

1. Install air filters.

Install air filters close to valves at their upstream side. A filtration degree of 5 μm or less should be selected.

2. Install an air dryer, after cooler or Drain Catch (water separator), etc.

Air that includes excessive drainage may cause malfunction of valves and other pneumatic equipment. To prevent this, install an air dryer, after-cooler or water separator, etc.

3. If excessive carbon dust is generated, eliminate it by installing mist separators at the upstream side of valves.

If excessive carbon dust is generated by the compressor, it may adhere to the inside of valves and cause malfunction.

Refer to “SMC Best Pneumatics” catalogue for compressed air quality.

4/5 Port Solenoid Valves/Common Precautions 4

Be sure to read before handling.

Operating Environment

⚠ Warning

1. **Do not use valves in atmospheres of corrosive gases, chemicals, salt water, water or steam or where there is direct contact with any of these.**
2. **Products with IP65 enclosures (based on IEC60529) are protected against dust and water, however, these products cannot be used in water.**
   Take measures to prevent water and dust from coming from the exhaust port.
3. **Products compliant to IP65 satisfy the specifications by mounting each product properly. Be sure to read the Specific Product Precautions for each product.**
4. **Do not use in an explosive atmosphere.**
5. **Do not use in locations subject to vibration or impact. Confirm the specifications in the main section of this catalogue.**
6. **A protective cover, etc., should be used to shield valves from direct sunlight.**
7. **Shield valves from radiated heat generated by nearby heat sources.**
8. **Employ suitable protective measures in locations where there is contact with water droplets, oil or welding spatter, etc.**
9. **When solenoid valves are mounted in a control panel or are energised for extended periods of time, employ measures to radiate excess heat, so that temperatures remain within the valve specification range.**

Maintenance

⚠ Warning

1. **Perform maintenance procedures as shown in the instruction manual.**

   If handled improperly, malfunction or damage of machinery or equipment may occur.

2. **Equipment removal and supply/exhaust of compressed air**

   When equipment is removed, first confirm that measures are in place to prevent dropping of work pieces and run-away of equipment, etc. Then cut the supply pressure and power, and exhaust all compressed air from the system using its residual pressure release function.

   Furthermore, in the case of 3 position closed center type valves, compressed air will remain between valves and cylinders, and must be exhausted similarly.

   When the equipment is to be started again after remounting or replacement, first confirm that measures are in place to prevent lurching of actuators, etc., and then confirm that the equipment is operating normally.

3. **Low frequency operation**

   Valves should be switched at least once every 30 days to prevent malfunction. (Use caution regarding the air supply.)

4. **Manual override operation**

   When the manual override is operated, connected equipment will be actuated. Confirm safety before operating.

⚠ Caution

1. **Drain flushing**

   Remove drainage from air filters regularly.

Series SY
Specific Product Precautions 1

Be sure to read before handling.
Refer to back page 1 through to 5 for Safety Instruction and Common Precautions.

Manual Override Operation

⚠Warning

■ Non-locking push type [Standard]

Press in the direction of the arrow

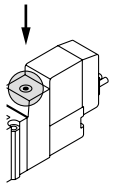

■ Push-turn locking slotted type [Type D]

While pressing, turn in the direction of the arrow.
If it is not turned, it can be operated the same way as the non-locking type.

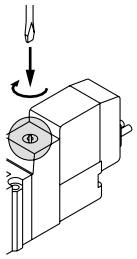

Locked position

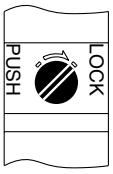

⚠Caution

When operating the locking type D with a screw driver, turn it gently using a watchmakers screw driver.
[Torque: Less than 0.1 N·m]

■ Push-turn locking lever type [Type E]

While pressing, turn it the direction of the arrow.
If it is not turned, it can be operated the same way as the non-locking type.

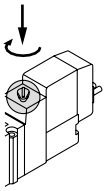

Locked position

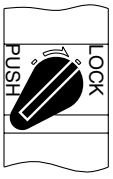

⚠Caution

When locking the manual override on the push-turn locking types (D, E), be sure to push it down before turning.
Turning without first pushing it down can cause damage to the manual override and trouble such as air leakage, etc.

Solenoid Valve for 200, 220 VAC Specifications

⚠Warning

Solenoid valves with DIN terminal and L/M type plug connector AC specifications have a built-in rectifier circuit in the pilot section to operate the DC coil.
With 200 V, 220 VAC specification pilot valves, this built-in rectifier generates heat when energised. The surface may become hot depending on the energised condition; therefore, do not touch the solenoid valves.

Exhaust Throttle

⚠Caution

With series SY, the pilot valve and main valve share a common exhaust inside the valve. Therefore, do not block the exhaust port when arranging the piping.

Series SY3000/5000/7000/9000 Used as a 3-Port Valve

⚠ Caution

In case of using a 5-port valve as a 3-port valve

Series SY3000/5000/7000/9000 can be used as normally closed (N.C.) or normally open (N.O.) 3-port port valves by closing one of the cylinder ports (A or B) with a plug. However, they should be used with the exhaust ports kept open. (Refer to pages 117 to 182 for dedicated 3-port solenoid valve.)

Plug position		B port	A port
Configuration		N.C.	N.O.
Number of solenoids	Single	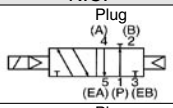	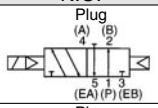
	Double	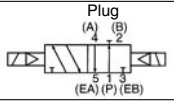	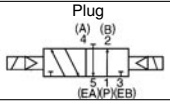

Series SY
Specific Product Precautions 2

Be sure to read before handling.
Refer to back page 1 through to 5 for Safety Instruction and Common Precautions.

How to Use Plug Connector

⚠Caution

1. Attaching and detaching connectors

- To attach a connector, hold the lever and connector unit between your fingers and insert straight onto the pins of the solenoid valve so that the lever's pawl is pushed into the groove and locks.
- To detach a connector, remove the pawl from the groove by pushing the lever downward with your thumb, and pull the connector straight out.

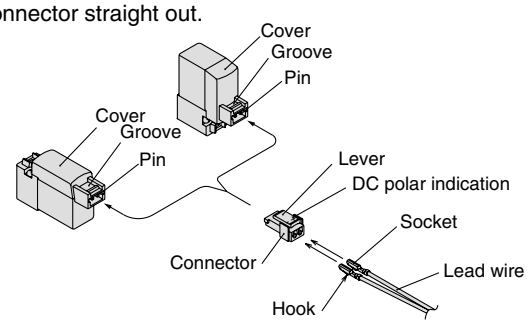

2. Crimping connection of lead wire and socket

Strip 3.2 to 3.7 mm at the end of lead wires, insert the end of the core wires evenly into the sockets, and then crimp it by a crimping tool. When this is done, take care that the coverings of the lead wires do not enter the core wire crimping area.
(Crimping tool: Model no. DXT170-75-1)

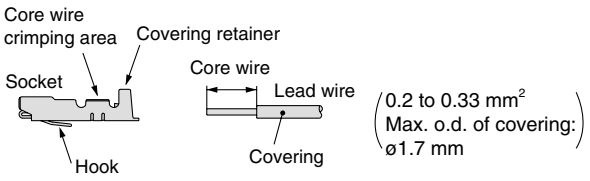

3. Attaching and detaching lead wires with sockets

• Attaching

Insert the sockets into the square holes of the connector (+, – indication), and continue to push the sockets all the way in until they lock by hooking into the seats in the connector.

(When they are pushed in, their hooks open and they are locked automatically.) Then confirm that they are locked by pulling lightly on the lead wires.

• Detaching

To detach a socket from a connector, pull out the lead wire while pressing the socket's hook with a stick having a thin tip (approx. 1 mm).

If the socket will be used again, first spread the hook outward.

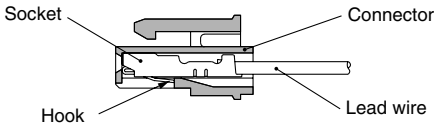

Surge Voltage Suppressor

⚠Caution

<For DC>
Grommet, L/M Plug Connector



■ Standard type (With polarity)

With surge voltage suppressor (□S)

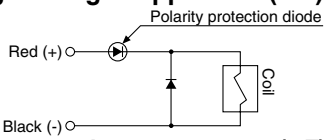

With light/surge voltage suppressor (□Z)

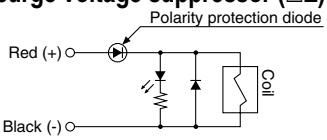



■ Non-polar type

With surge voltage suppressor (□R)

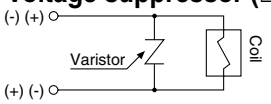

With light/surge voltage suppressor (□U)

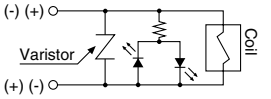

- Connect the standard type in accordance with the +, – polarity indication. (The non-polar type can be used with the connections made either way.)
- Since voltage specifications other than standard 24 V and 12 VDC do not have diodes for polarity protection, be careful not to make errors in the polarity.
- Please use caution regarding the allowable voltage fluctuation because there is about a 1 volt drop for a valve with polarity protection. (For details, refer to the solenoid specifications for the individual valve.)
- When wiring is done at the factory, positive (+) is red and negative (–)

■ With power saving circuit

Power consumption is decreased by 1/4 by reducing the wattage required to hold the valve in an energised state. (Effective energising time is over 62 ms at 24 VDC.)

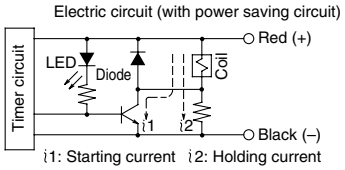

Operating Principle

With the above circuit, the current consumption when holding is reduced to save energy. Please refer to the electric wave data below.

- Please be careful not to reverse the polarity, since a diode to prevent the reversed current is not provided for the power saving circuit.
- Please use caution regarding the allowable voltage fluctuation because there is about a 0.5 volt drop due to the transistor. (For details, refer to the solenoid specifications for the individual valve.)

(In the case of SY$^{3}_{5}_{9}$0T, the electric wave form of energy saving type)**

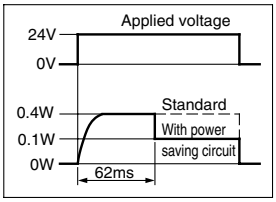

SMC

Series SY
Specific Product Precautions 3

Be sure to read before handling.
Refer to back page 1 through to 5 for Safety Instruction and Common Precautions.

Surge Voltage Suppressor

DIN Terminal

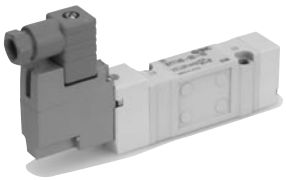

With surge voltage suppressor (DS)

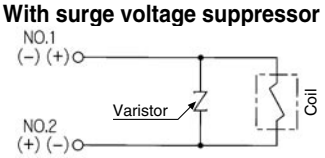

With light/surge voltage suppressor (DZ)

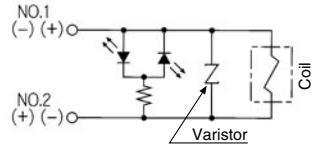

DIN terminal has no polarity.

M8 Connector

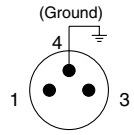

Solenoid valve side pin wiring diagram (For W type)

■ Standard type (without polarity)

With surge voltage suppressor (□S)

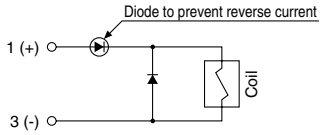

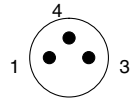

Solenoid valve side pin wiring diagram (For WA type)

With light/surge voltage suppressor (□Z)

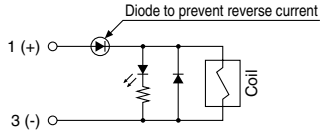

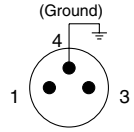

Solenoid valve side pin wiring diagram (For W type)

■ Non-polar type

With surge voltage suppressor (□R)

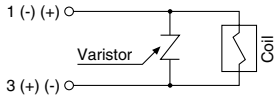

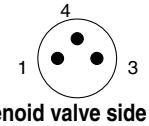

Solenoid valve side pin wiring diagram (For WA type)

With light/surge voltage suppressor (□U)

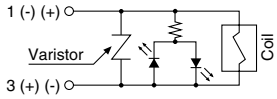

- In the case of standard type, connect + to 1 and – to 3 for W type, and connect + to 4 and - to 3 for WA type, according the polarity.
- For DC voltages other than 12 V and 24 V, incorrect wiring will case damage to the surge suppressor circuit.
- Please use caution regarding the allowable voltage fluctuation because there is about a 1 volt drop for a valve with polarity protection. (For details, refer to the solenoid specifications for the individual valve.)

Plug-in

Circuit for non-polar (FU)

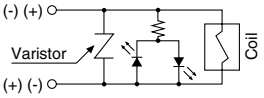

Plug-in valve has no polarity, so its possible to use for both manifold bases for positive (SS5Y$^{3}_{5}$-45□) and negative its common (SS5Y$^{3}_{5}$-45N□) types.

<For AC>

(There is no “S” option, because the generation of surge voltage is prevented by a rectifier.)

DIN Terminal

With light (DZ)

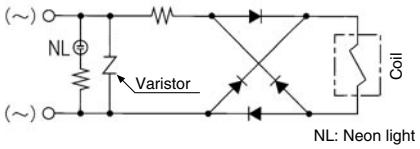

NL: Neon light

Note) Surge voltage suppressor of varistor has residual voltage corresponding to the protective element and rated voltage; therefore, protect the controller side from the surge voltage. The residual voltage of the diode is approximately 1 V.

Specific Product Precautions 4

Be sure to read before handling.
Refer to back page 1 through to 5 for Safety Instruction and Common Precautions.

Plug Connector Lead Wire Length

⚠Caution

Standard length is 300mm, but the following lengths are also available.

How to Order Connector Assembly

For DC: **SY100−30−4A−□**

Without lead wire: **SY100−30− A**
(with connector and 2 of sockets only)

• How to Order

Specify the part numbers of the solenoid valve without connector and the connector assembly with protective cover separately.
<Example> Lead wire length 2000 mm

For DC
SY3120-5LO-M5
SY100-30-4A-20

Lead wire length

-	300 mm
6	600 mm
10	1000 mm
15	1500 mm
20	2000 mm
25	2500 mm
30	3000 mm
50	5000 mm

How to Use DIN Terminal

⚠Caution

Connection

1. Loosen the holding screw and pull the connector out of the solenoid valve terminal block.
2. After removing the holding screw, insert a flat head screwdriver, etc. into the notch on the bottom of the terminal block and pry it open, separating the terminal block and the housing.
3. Loosen the terminal screws (slotted screws) on the terminal block, insert the cores of the lead wires into the terminals according to the connection method, and fasten them securely with the terminal screws.
4. Secure the cord by fastening the ground nut.

⚠ Caution

When making connections, take note that using other than the supported size (ø3.5 to ø7) heavy duty cord will not satisfy IP65 (enclosure) standards. Also, be sure to tighten the ground nut and holding screw within their specified torque ranges.

Changing the entry direction

After separating the terminal block and housing, the cord entry can be changed by attaching the housing in the desired direction (4 directions at 90° intervals).

∗ When equipped with a light, be careful not to damage the light with the cord's lead wires.

Precautions

Plug in and pull out the connector vertically without tilting to one side.

Compatible cable

Cord O.D.: ø3.5 to ø7
(Reference) 0.5mm^2, 2-core or 3-core, equivalent to JIS C 3306

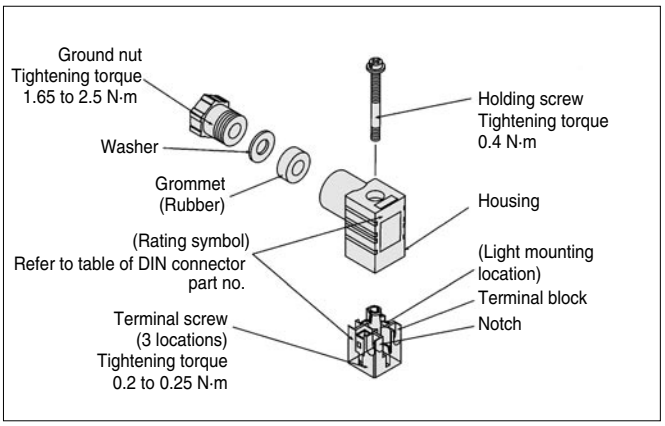

Series SY
Specific Product Precautions 5

Be sure to read before handling.
Refer to back page 1 through to 5 for Safety Instruction and Common Precautions.

Series SY300, SY3000
How to Use DIN Terminal Connector

⚠Caution

- SMC can provide a DIN style terminal connector (body ported type, sub-plate type) for the series SY300 and SY3000. This cannot be assembled to a standard manifold since the DIN connector width (15.8mm) exceeds that of the valve body (10mm). Contact SMC if you wish to use with a manifold. Please also note: that brackets F1, F2 cannot be mounted.

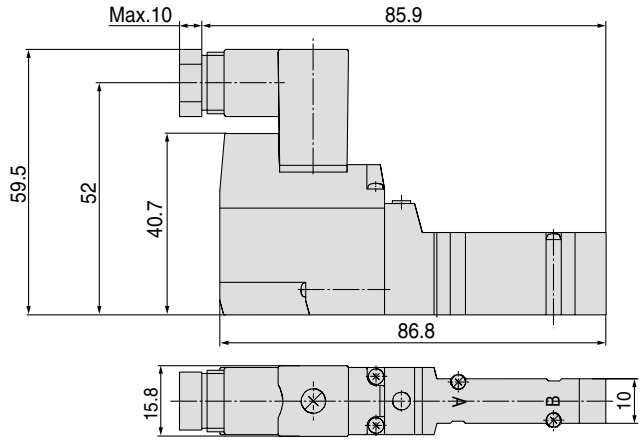

DIN Connector Part No.

⚠Caution

Without light	SY100-61-1

With light

Rated voltage	Voltage symbol	No.
24 VDC	24 V	SY100-61-3-05
12 VDC	12 V	SY100-61-3-06
100 VAC	100 V	SY100-61-2-01
200 VAC	200 V	SY100-61-2-02
110 VAC	110 V	SY100-61-2-03
220 VAC	220 V	SY100-61-2-04

Circuit Diagram with Light

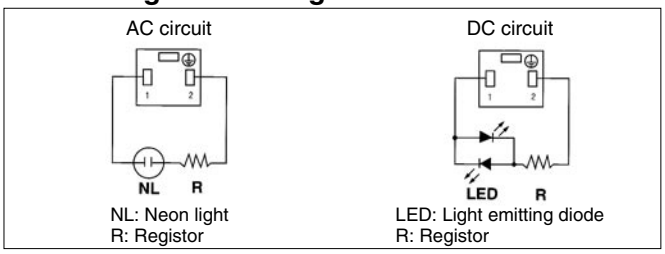

Note) Refer to page 212 for DIN connector (Y) conforming to EN-175301-803C (former DIN 43650C).

Connector Assembly with Cover

⚠Caution

Connector assembly with dust proof protective cover.

- Effective to prevention of short circuit failure due to the entry of foreign matter into the connector.
- Chloroprene rubber for electrical use, which provides outstanding weather resistance and electrical insulation, is used for the cover material. However, do not allow contact with cutting oil, etc.
- Simple and unencumbered appearance by adopting round-shaped cord.

How to Order

SY100-68-A-□

● Lead wire length (L)

-	300 mm
6	600 mm
10	1000 mm
15	1500 mm
20	2000 mm
25	2500 mm
30	3000 mm
50	5000 mm

Connector Assembly with Cover: Dimensions

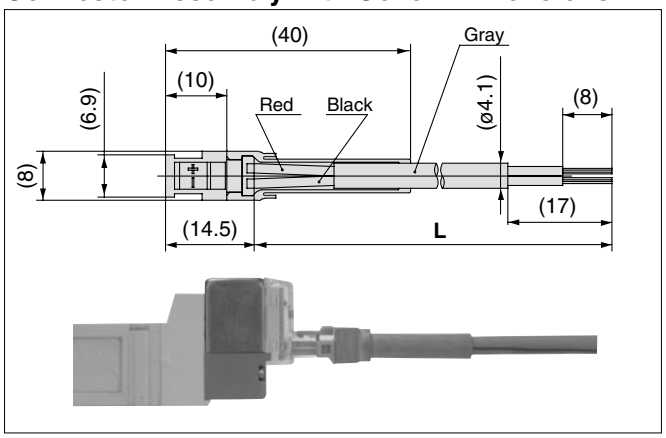

How to Order

Enter the part number for a plug connector solenoid valve without connector together with the part number for a connector assembly with cover.

<Example 1> Lead wire length of 2000 mm
SY3120-5LOZ-M5-Q
SY100-68-A-20

<Example 2> Lead wire length of 300 mm (standard)
SY3120-5LPZ-M5-Q
Symbol for connector assembly with cover

∗ In this case, the part number for the connector assembly with cover is not required.

Specific Product Precautions 6

Be sure to read before handling.
Refer to back page 1 through to 5 for Safety Instruction and Common Precautions.

Plug-in

⚠Caution

■ When using a double solenoid valve (Dual body type: SY$^{3}_{5}$245-□FU) on the plug-in style manifold (SS5Y$^{3}_{5}$-45(N)□), two manifold stations are required per valve.

Output to A/B ports will be made through the manifold block on the side indicated by an arrow on the top of the solenoid valve. Therefore, arrange the piping on the side indicated by the arrow.

Although the "T" side will not be used, plugs will not be necessary since it is sealed with the valve.

(However, insert a plug into the A/B ports if dust intrusion is possible. Refer to page 138.)

Manifold valve
SS5Y$^{3}_{5}$-45 (N)□

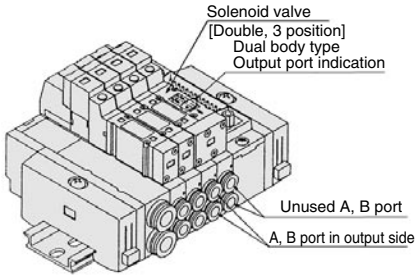

Plug-in type solenoid valves consist of a non-polar solenoid valve and a plug-in socket. When ordering them separately, refer to the following part numbers.

[Single solenoid]

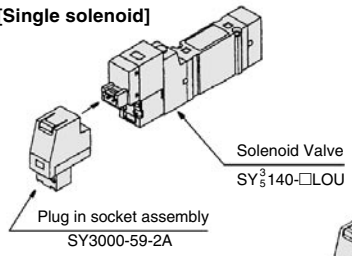

[Double, 3 position]
Dual body type

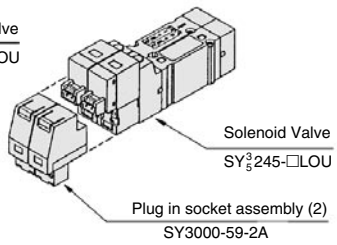

Note) Using a valve other than a non-polar type may cause trouble.

DIN Rail for Series SY7000/9000

⚠Caution

The DIN rail used with Series SY7000 and SY9000 is stronger than that used with Series SY3000 and SY5000. Use this exclusive DIN rail with Series SY7000 and SY9000. Furthermore, if using a DIN rail other than that supplied by SMC, refer to the manifold mounting section below, and mount using the same method as prescribed for side facing and rear facing, regardless of the mounting orientation.

Manifold Mounting

⚠Caution

For Type 23, 43, 45, 45□ and 60 DIN rail mounting, when attaching a manifold to a mounting surface, etc., with bolts, if the entire bottom surface of the DIN rail contacts the mounting surface in a horizontal mounting, it can be used by simply securing both ends of the DIN rail. However, for any other mounting method or for side facing and rear facing, etc., secure the DIN rail with bolts at uniform intervals using the following as a guide: 2 to 5 stations at 2 locations, 6 to 10 stations at 3 locations, 11 to 15 stations at 4 locations, and 16 to 20 stations at 5 locations. In addition, even in the case of a horizontal mounting, if the mounting surface is subject to vibration, etc., take the same measures indicated above. If secured at fewer than the specified number of locations, warping or twisting may occur in the DIN rail and manifold, causing trouble such as air leakage.

Also, when using mounting screws for the DIN rail on the bottom side (L3 dimension in the dimension table) of the manifold valve body, the height of the screw head has to be as follows.

Type 23, 43 (SY9000): 8 mm or less
Type 45 (SY3000, 5000): 5.8 mm or less

For type 60:
SY3000: 4.7 mm or less
SY5000: 5.8 mm or less

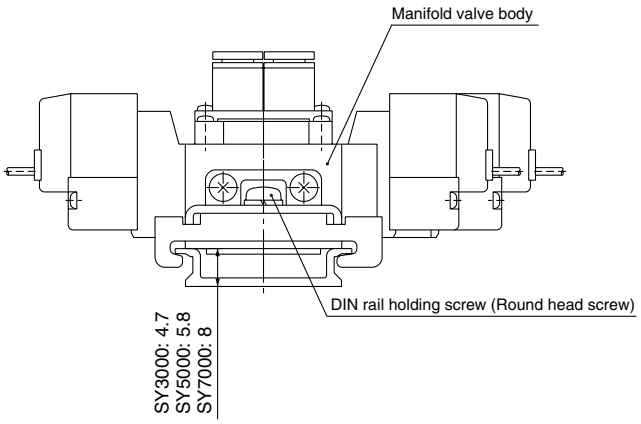

[This is the case for type 60.]

Series SY
Specific Product Precautions 7

Be sure to read before handling.
Refer to back page 1 through to 5 for Safety Instruction and Common Precautions.

One-touch Fittings

⚠Caution

The pitch determined for each of the series SY piping ports (P, A, B, etc.) is based on the assumption that series KJ one-touch fittings will be used. For this reason, other pipe fittings may interfere with each other depending on their type and size. Dimensions should be confirmed in a pipe fitting catalogue before they are used.

• Tubing attachment/detachment for One-touch fittings

1) Attaching of tubing

1. Take a tubing having no flaws on its periphery and cut it off at a right angle. When cutting the tubing, use tubing cutters TK-1, 2 or 3. Do not use pinchers, nippers or scissors, etc. If cutting is done with tools other than tubing cutters, the tubing may be cut diagonally or become flattened, etc., making a secure installation impossible, and causing problems such as the tubing pulling out after installation or air leakage. Allow some extra length in the tubing.
2. Grasp the tubing and push it in slowly, inserting it securely all the way into the fitting.
3. After inserting the tubing, pull on it lightly to confirm that it will not come out. If it is not installed securely all the way into the fitting, this can cause problems such as air leakage or the tubing pulling out.

2) Detaching of tubing

1. Push in the release button sufficiently, pushing its collar equally around the circumference.
2. Pull out the tubing while holding down the release button so that it does not come out. If the release button is not pressed down sufficiently, there will be increased bite on the tubing and it will become more difficult to pull it out.
3. When the removed tubing is to be used again, cut off the portion which has been chewed before reusing it. If the chewed portion of the tubing is used as is, this can cause trouble such as air leakage or difficulty in removing the tubing.

- The pitch determined for each of the series SY piping ports (A, B, etc.) is based on the assumption that series KJ one-touch fittings will be used. For this reason, other pipe fittings may interfere with each other depending on their type and size. Dimensions should be confirmed in a pipe fitting catalogue before they are used.

Other Tubing Brands

⚠Caution

1. When using other than SMC brand tubing, confirm that the following specifications are satisfied with respect to the outside diameter tolerance of the tubing.

1) Nylon tubing	within ±0.1 mm
2) Soft nylon tubing	within ±0.1 mm
3) Polyurethane tubing	within +0.15 mm, within –0.2 mm.

Do not use tubing which do not meet these outside diameter tolerances. It may not be possible to connect them, or they may cause other trouble, such as air leakage or the tubing pulling out after connection.

M8 Connector

⚠Caution

1. M8 connector types have an IP65 (enclosure) rating, offering protection from dust and water. However please note: these products are not intended for use in water.
   Select a SMC connector cable (V100-49-1-□) or a FA sensor type connector, with M8 threaded 3 pin specifications conforming to Nippon Electric Control Equipment Association Standard, NECA4202 (IEC60947-5-2). Make sure the connector O.D. is 10.5mm or less when used with the Series SY3000 manifold. If more than 10.5mm, it cannot be mounted due to the size.
2. Do not use a tool to mount the connector, as this may cause damage. Only tighten by hand. (0.4 to 0.6 N·m)
3. The excessive stress on the cable connector will not be able to satisfy the IP65 rating. Please use caution and do not apply a stress of 30 N or greater.

⚠ Caution

Failure to meet IP65 performance may result if using alternative connectors than those shown above, or when insufficiently tightened.

Connector cable mounting

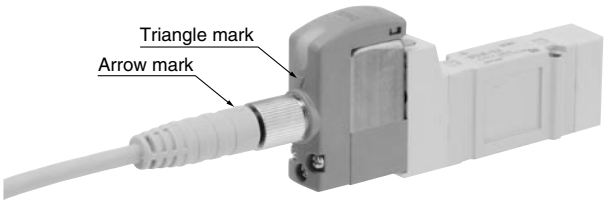

Note) Connector cable should be mounted in the correct direction.
Make sure that the arrow symbol on the connector is facing the triangle symbol on the valve when using SMC connector cable (V100-49-1-□).

Be careful not to squeeze it in the wrong direction, as problems such as pin damage may occur.

Series SY
Specific Product Precautions 8

Be sure to read before handling.
Refer to back page 1 through to 5 for Safety Instruction and Common Precautions.

M8 Connector

⚠Caution

■ Connector cable

- Connector cable for M8 can be ordered as follows:

How to Order

1. To order solenoid valve and connector cable at the same time.
(Connector cable will be included in the shipment of the solenoid valve.)

SY3/5/7/9□□□−□□□□−□□-Q

Electrical entry
W1, WA1: Cable length 300 mm
W2, WA2: Cable length 500 mm
W3, WA3: Cable length 1000 mm
W4, WA4: Cable length 2000 mm
W7, WA7: Cable length 5000 mm

Ex. 1) Cable length: 300mm
SY312-5W1ZE-C4-Q
Symbol for electrical entry

2. To order connector cable only

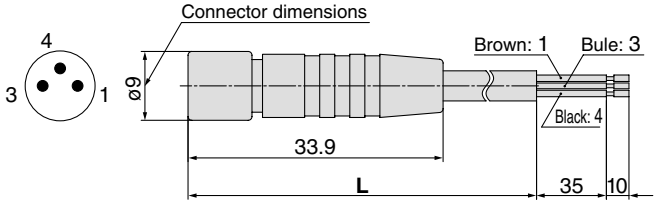

Cable length (L)	No.
300 mm	V100-49-1-1
500 mm	V100-49-1-2
1000 mm	V100-49-1-3
2000 mm	V100-49-1-4
5000 mm	V100-49-1-7

[Dimensions when installed]

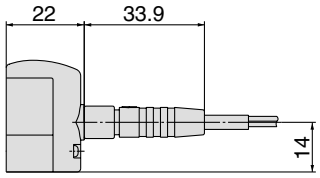

Solenoid Valve Mounting

⚠Caution

Mount it so that there is no slippage or deformation in gaskets, and tighten with the tightening torque as shown below.

Model	Thread size	Tightening torque
SY3000	M2	0.16 N·m
SY5000	M3	0.8 N·m
SY7000	M4	1.4 N·m
SY9000	M3	0.8 N·m

Replacement of Pilot Valve

⚠Caution

Pilot valves in this series are improved to provide excellent energy saving results. However following this improvement, these new valves are no longer compatible with the conventional pilot valve used at the interface. Consult with SMC when you need to exchange these pilot valves, in the case of manual override (marked in orange) of the adapter plate.

New type

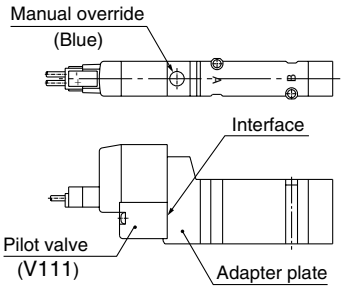

Conventional type

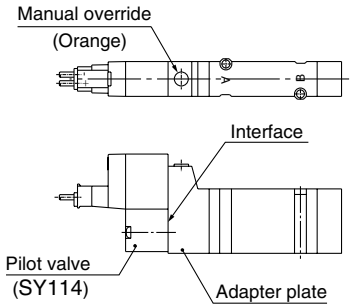

Specific Product Precautions 9

Be sure to read before handling.
Refer to back page 1 through to 5 for Safety Instruction and Common Precautions.

Interface Regulator

⚠Caution

Specifications

Interface regulator model		ARBY3000-□-P-2	ARBY3000-□-$^{A1}_{B1}$-2		ARBY5000-□-P-2	ARBY5000-□-$^{A1}_{B1}$-2		ARBY7000-□-P-2	ARBY7000-□-$^{A1}_{B1}$-2	
Applicable solenoid valve model		SY3□40(R)			SY5□40(R)			SY7□40(R)		
Regulated port		P	A	B	P	A	B	P	A	B
Set pressure range		0.1 to 0.7 MPa								
Maximum operating pressure		0.7 MPa								
Fluid		Air								
Ambient and fluid temperature		Max. 50°C								
Connection port of pressure gauge		M5								
Weight W (g)	With pressure gauge	46 g (05), 50 g (06)			66.8 g			110.8 g		
	With plug	20 g			60.4 g			103.2 g		
Supply side effective area Note 3)	P→A,B	—	2.45 mm²		—	7.61 mm²		—	13.54 mm²	
Exhaust side effective area Note 3)	A,B→EA,EB	4.05 mm²	3.91 mm²		11.1 mm²	10.1 mm²		15.71 mm²	15.71 mm²	

Note 1) Pressurise the interface regulator from P port on the base.
Note 2) With closed center and pressure center valves, the pressure can be regulated through P port only.
Note 3) Effective area, excluding the regulated port, when a primary pressure of 0.5 MPa is supplied with regulators mounted on the solenoid valves (2 positions) and sub-plate. Refer to "Flow Characteristics" regarding the regulated port.
Note 4) Valves for weight include gasket and mounting screws.
Note 5) With A, B ports regulated (P port controlled A, B ports regulated), the effective area (Cv factor) for the regulated port and unregulated passage (P to B or P to A) decreases as shown in the graph below when the set pressure is 0.25 MPa or less.

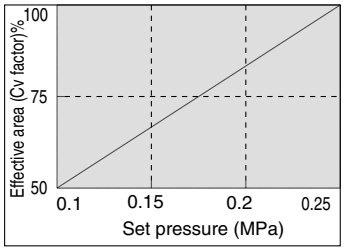

JIS Symbol

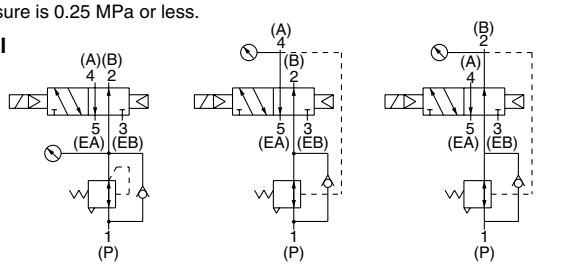

P port regulated | **A port regulated (P controlled, A port regulated)** | **B port regulated (P controlled, B port regulated)**

How to Order Interface Regulator

ARBY3000—05—P—2

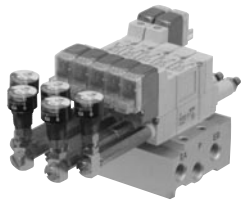

Regulated port

P	P port
A1	A port (P controlled, A port regulated)
B1	B port (P controlled, B port regulated)

Pressure gauge connection port

05	Pressure gauge (G15-10-01) [for odd number stations]
06	Pressure gauge (G15-10-01) [for even number stations]
M1	Plug (M-5P)

Note) For series ARBY3000 with pressure gauge, note that the part numbers for odd number and even number stations differ to prevent interference between the pressure gauges when installing on the manifold.

ARBY5000—00—P—2

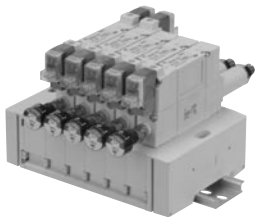

Regulated port

P	P port
A1	A port (P controlled, A port regulated)
B1	B port (P controlled, B port regulated)

Pressure gauge connection port

00	Pressure gauge (G15-10-01)
M1	Plug (M-5P)

ARBY7000—00—P—2

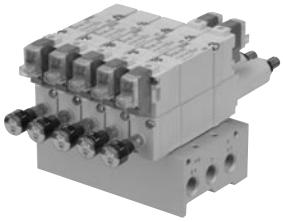

Regulated port

P	P port
A1	A port (P controlled, A port regulated)
B1	B port (P controlled, B port regulated)

Pressure gauge connection port

00	Pressure gauge (G15-10-01)
M1	Plug (M-5P)

Specific Product Precautions 10

Be sure to read before handling.
Refer to back page 1 through to 5 for Safety Instruction and Common Precautions.

Flow Characteristics

(Conditions: Inlet pressure 0.7 MPa when 2 position solenoid valve is mounted.)

ARBY3000

P port regulated (P→A, B)

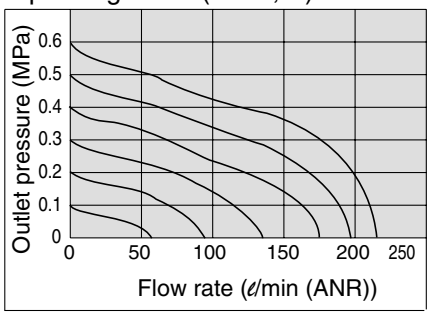

A1 port regulated (P→A),
B1 port regulated (P→B)

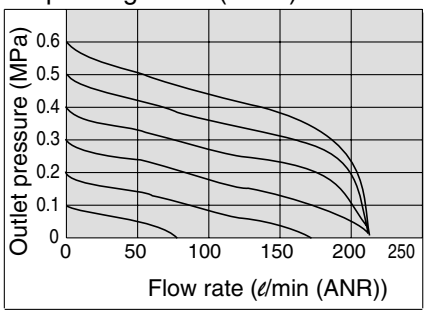

ARBY5000

P port regulated (P→A, B)

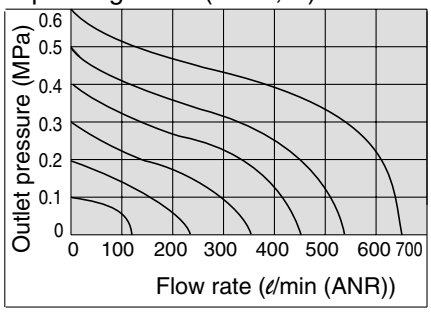

A1 port regulated (P→A),
B1 port regulated (P→B)

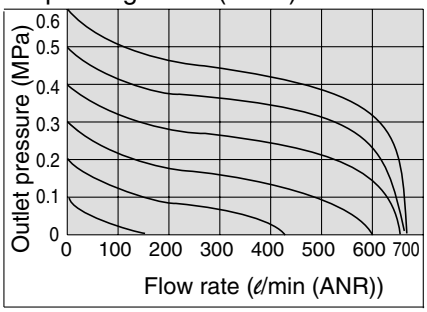

ARBY7000

P port regulated (P→A, B)

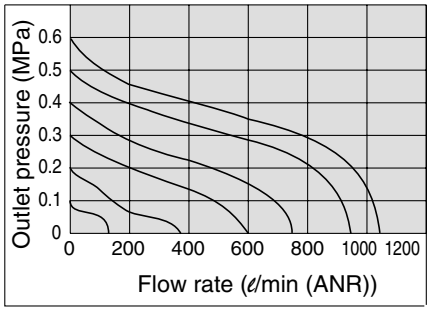

A1 port regulated (P→A),
B1 port regulated (P→B)

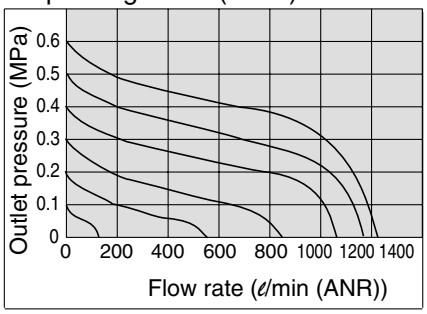

EUROPEAN SUBSIDIARIES:

Austria
SMC Pneumatik GmbH (Austria).
Girakstrasse 8, A-2100 Korneuburg
Phone: +43 2262-62280, Fax: +43 2262-62285
E-mail: office@smc.at
http://www.smc.at

Belgium
SMC Pneumatics N.V./S.A.
Nijverheidsstraat 20, B-2160 Wommelgem
Phone: +32 (0)3-355-1464, Fax: +32 (0)3-355-1466
E-mail: post@smcpneumatics.be
http://www.smcpneumatics.be

Bulgaria
SMC Industrial Automation Bulgaria EOOD
16 kliment Ohridski Blvd., fl.13 BG-1756 Sofia
Phone:+359 2 9744492, Fax:+359 2 9744519
E-mail: office@smc.bg
http://www.smc.bg

Croatia
SMC Industrijska automatika d.o.o.
Crnomerec 12, 10000 ZAGREB
Phone: +385 1 377 66 74, Fax: +385 1 377 66 74
E-mail: office@smc.hr
http://www.smc.hr

Czech Republic
SMC Industrial Automation CZ s.r.o.
Hudcova 78a, CZ-61200 Brno
Phone: +420 5 414 24611, Fax: +420 5 412 18034
E-mail: office@smc.cz
http://www.smc.cz

Denmark
SMC Pneumatik A/S
Knudsminde 4B, DK-8300 Odder
Phone: +45 70252900, Fax: +45 70252901
E-mail: smc@smc-pneumatik.dk
http://www.smcdk.com

Estonia
SMC Pneumatics Estonia OÜ
Laki 12, 106 21 Tallinn
Phone: +372 6510370, Fax: +372 65110371
E-mail: smc@smcpneumatics.ee
http://www.smcpneumatics.ee

Finland
SMC Pneumatics Finland Oy
PL72, Tiistinniityntie 4, SF-02231 ESPOO
Phone: +358 207 513513, Fax: +358 207 513595
E-mail: smcfi@smc.fi
http://www.smc.fi

France
SMC Pneumatique, S.A.
1, Boulevard de Strasbourg, Parc Gustave Eiffel
Bussy Saint Georges F-77607 Marne La Vallee Cedex 3
Phone: +33 (0)1-6476 1000, Fax: +33 (0)1-6476 1010
E-mail: contact@smc-france.fr
http://www.smc-france.fr

Germany
SMC Pneumatik GmbH
Boschring 13-15, D-63329 Egelsbach
Phone: +49 (0)6103-4020, Fax: +49 (0)6103-402139
E-mail: info@smc-pneumatik.de
http://www.smc-pneumatik.de

Greece
SMC Hellas EPE
Anagenniseos 7-9 - P.C. 14342. N. Philadelphia, Athens
Phone: +30-210-2717265, Fax: +30-210-2717766
E-mail: sales@smchellas.gr
http://www.smchellas.gr

Hungary
SMC Hungary Ipari Automatizálási Kft.
Budafoki ut 107-113, H-1117 Budapest
Phone: +36 1 371 1343, Fax: +36 1 371 1344
E-mail: office@smc.hu
http://www.smc.hu

Ireland
SMC Pneumatics (Ireland) Ltd.
2002 Citywest Business Campus, Naas Road, Saggart, Co. Dublin
Phone: +353 (0)1-403 9000, Fax: +353 (0)1-464-0500
E-mail: sales@smcpneumatics.ie
http://www.smcpneumatics.ie

Italy
SMC Italia S.p.A
Via Garibaldi 62, I-20061Carugate, (Milano)
Phone: +39 (0)2-92711, Fax: +39 (0)2-9271365
E-mail: mailbox@smcitalia.it
http://www.smcitalia.it

Latvia
SMC Pneumatics Latvia SIA
Smerla 1-705, Riga LV-1006
Phone: +371 781-77-00, Fax: +371 781-77-01
E-mail: info@smclv.lv
http://www.smclv.lv

Lithuania
SMC Pneumatics Lietuva, UAB
Oslo g.1, LT-04123 Vilnius
Phone: +370 5 264 81 26, Fax: +370 5 264 81 26

Netherlands
SMC Pneumatics BV
De Ruyterkade 120, NL-1011 AB Amsterdam
Phone: +31 (0)20-5318888, Fax: +31 (0)20-5318880
E-mail: info@smcpneumatics.nl
http://www.smcpneumatics.nl

Norway
SMC Pneumatics Norway A/S
Vollsveien 13 C, Granfos Næringspark N-1366 Lysaker
Tel: +47 67 12 90 20, Fax: +47 67 12 90 21
E-mail: post@smc-norge.no
http://www.smc-norge.no

Poland
SMC Industrial Automation Polska Sp.z.o.o.
ul. Poloneza 89, PL-02-826 Warszawa,
Phone: +48 22 211 9600, Fax: +48 22 211 9617
E-mail: office@smc.pl
http://www.smc.pl

Portugal
SMC Sucursal Portugal, S.A.
Rua de Engº Ferreira Dias 452, 4100-246 Porto
Phone: +351 22-610-89-22, Fax: +351 22-610-89-36
E-mail: postpt@smc.smces.es
http://www.smces.es

Romania
SMC Romania srl
Str Frunzei 29, Sector 2, Bucharest
Phone: +40 213205111, Fax: +40 213261489
E-mail: smcromania@smcromania.ro
http://www.smcromania.ro

Russia
SMC Pneumatik LLC.
4B Sverdlovskaja nab, St. Petersburg 195009
Phone.:+7 812 718 5445, Fax:+7 812 718 5449
E-mail: info@smc-pneumatik.ru
http://www.smc-pneumatik.ru

Slovakia
SMC Priemyselná Automatizáciá, s.r.o.
Námestie Matina Benku 10, SK-81107 Bratislava
Phone: +421 2 444 56725, Fax: +421 2 444 56028
E-mail: office@smc.sk
http://www.smc.sk

Slovenia
SMC industrijska Avtomatika d.o.o.
Mirnska cesta 7, SLO-8210 Trebnje
Phone: +386 7 3885412 Fax: +386 7 3885435
E-mail: office@smc.si
http://www.smc.si

Spain
SMC España, S.A.
Zuazobidea 14, 01015 Vitoria
Phone: +34 945-184 100, Fax: +34 945-184 124
E-mail: post@smc.smces.es
http://www.smces.es

Sweden
SMC Pneumatics Sweden AB
Ekhagsvägen 29-31, S-141 71 Huddinge
Phone: +46 (0)8-603 12 00, Fax: +46 (0)8-603 12 90
E-mail: post@smcpneumatics.se
http://www.smc.nu

Switzerland
SMC Pneumatik AG
Dorfstrasse 7, CH-8484 Weisslingen
Phone: +41 (0)52-396-3131, Fax: +41 (0)52-396-3191
E-mail: info@smc.ch
http://www.smc.ch

Turkey
Entek Pnömatik San. ve Tic Ltd. Sti.
Perpa Tic. Merkezi Kat: 11 No: 1625, TR-80270 Okmeydani Istanbul
Phone: +90 (0)212-221-1512, Fax: +90 (0)212-221-1519
E-mail: smc-entek@entek.com.tr
http://www.entek.com.tr

UK
SMC Pneumatics (UK) Ltd
Vincent Avenue, Crownhill, Milton Keynes, MK8 0AN
Phone: +44 (0)800 1382930 Fax: +44 (0)1908-555064
E-mail: sales@smcpneumatics.co.uk
http://www.smcpneumatics.co.uk

OTHER SUBSIDIARIES WORLDWIDE:

ARGENTINA, AUSTRALIA, BOLIVIA, BRASIL, CANADA, CHILE, CHINA, HONG KONG, INDIA, INDONESIA, MALAYSIA, MEXICO, NEW ZEALAND, PHILIPPINES, SINGAPORE, SOUTH KOREA, TAIWAN, THAILAND, USA, VENEZUELA

http://www.smc.eu
http://www.smcworld.com

SMC CORPORATION Akihabara UDX 15F, 4-14-1, Sotokanda, Chiyoda-ku, Tokyo 101-0021, JAPAN Phone: 03-5207-8249 FAX: 03-5298-5362

1st printing LS printing LS 00 Printed in Spain

Specifications are subject to change without prior notice and any obligation on the part of the manufacturer.