REVISION RECORD				
REV	ECO	DESCRIPTION	DRFT	CHKD

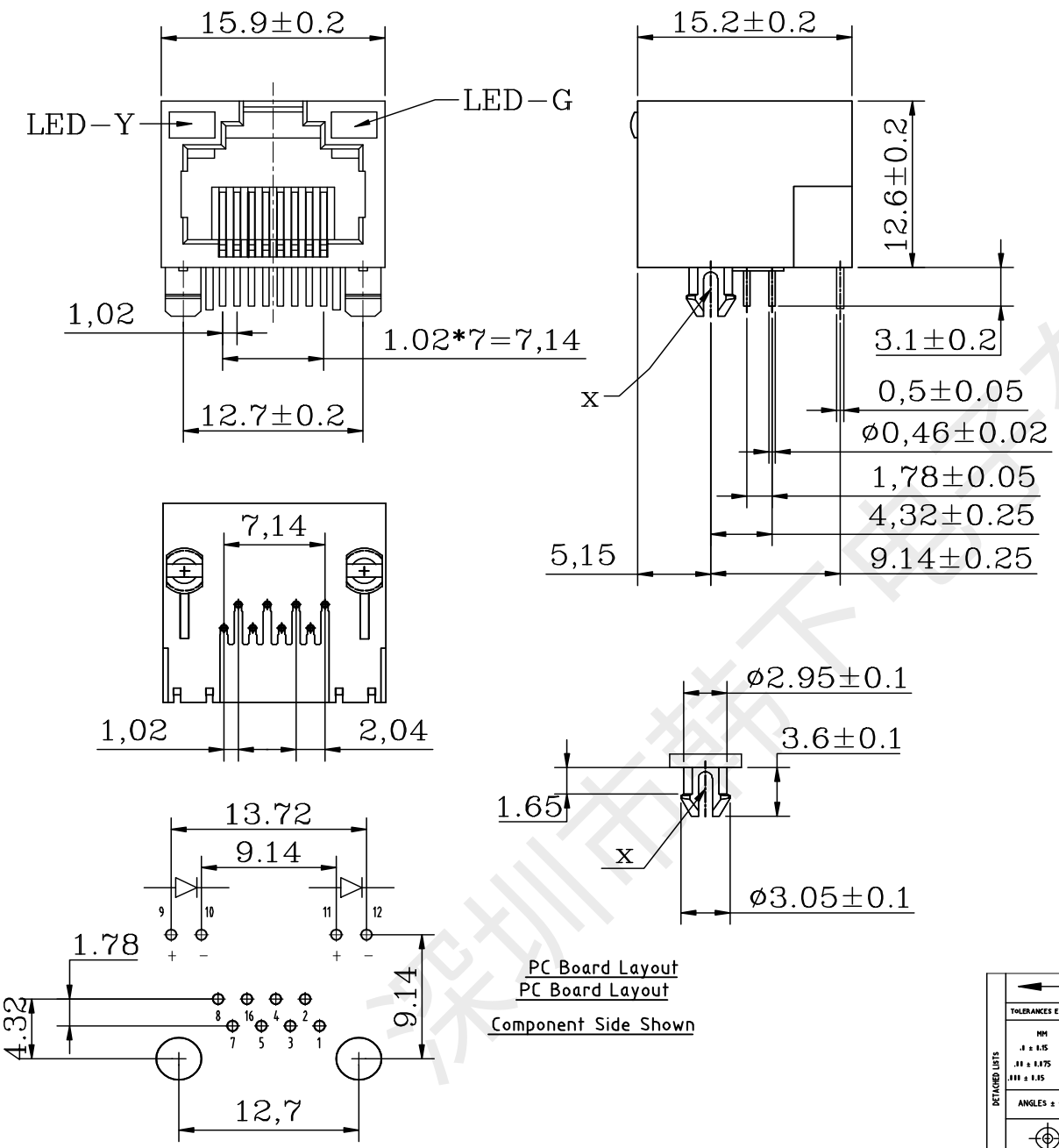

Specifications:

1. Electrical:
   Rated voltage and current: 125V 1.5A Max
   Contact resistance: 50mΩ Max Initial state
   100mΩ Max End state
   Insulation resistance: 500MΩ Min
   Withstand Voltage: AC 1000V
2. Mechanical:
   Durability: 750 Cycles 20-30Cycles/Min
3. Matorial:
   Housing: Glass Filled Polyester UL94V-0
   Contact: Phosphor Bronze
   Plating: Gold Plating Fu“50u”Over Nickel
4. Temperature Range: -25℃ to +85℃.
5. Welding temperature: 260±5℃ 3±0.5S

MM (INCH)	DFTO 黄彬	DATE	深圳市韩下电子有限公司
TOLERANCES EXCEPT AS NOTED	CHKD 张伟	DATE	
MM .X ± 0.15 ± / .XX ± 0.075 ± / .XXX ± 0.15 ±	MFO	DATE	TITLE: HX-RJ45 90 5631-1x1S LED
DETACHED LISTS	APPVL 罗小春	DATE	
	MATERIAL :		DRAWING NO. / PART NO.
ANGLES ± 0.5	Q.T'Y :		SIZE A3 / REV 0
THIRD ANGLE PROJECTION	FINISH :		DO NOT SCALE DRAWING / SHEET X OF Y
	SCALE :		

深圳市韩下电子有限公司

深圳市韩下电子有限公司
Shenzhen Hanxia Electronic Co., Ltd
Tel: 0755-23086569

承　认　书

SPECIFICATION FOR APPROVAL

产 品 编 码
Material code: _____

产品名称 Project：以太网连接器

规格型号 Part No：HX-RJ45 90 5631-1x1S LED

贵公司承认印 Approal slgnatures

料 号/Part No.	签　章/Signatures

日期 Date:

拟制/Drawn	黄彬	深圳市韩下电子有限公司 工程专用章
审核/Check	张伟	
批准/Approved	罗小春	

深圳市韩下电子有限公司