SACC-M12FSK-4PEPL-CL SH - Power connector

1080228

https://www.phoenixcontact.com/us/products/1080228

Please be informed that the data shown in this PDF document is generated from our online catalog. Please find the complete data in the user documentation. Our general terms of use for downloads are valid.



Power connector, Power, 5-position, shielded, Socket straight M12, coding: K, Push-lock spring connection, knurl material: Brass, nickel-plated, external cable diameter 8 mm ... 13 mm, Contact 5 leading

Your advantages

- Time-saving Push-Lock connection: Tool-free connection and disconnection of conductors by opening the contact levers
- Intuitive connection: Easy assignment of individual litz wires with color-coded and numerical identification of the contact levers
- Integrated Push-in Technology: Wire rigid and pretreated conductors easily by means of simple, direct insertion
- Shock- and vibration-resistant connection: Proven spring-cage technology guarantees secure and reliable contacting
- Increased protection against electric shock: PE connection to all metal components
- Safely shielded: Reliable 360° shield connection even under extreme mechanical strain
- Protected seal in the M12 socket

Commercial data

Item number	1080228
Packing unit	1 pc
Minimum order quantity	1 pc
Sales key	BF33
Product key	BF2CFP
GTIN	4055626802954
Weight per piece (including packing)	91.34 g
Weight per piece (excluding packing)	91.34 g
Customs tariff number	85366990
Country of origin	DE

Technical data

Notes

Assembly note	NOTE: Observe the permissible bending radii when routing cables, since the degree of protection may be at risk if the bending forces are too high. Reduce mechanical loads upstream of the connector, e.g., by using cable ties.

Mounting

Assembly note	The wires can be connected both with ferrules and without ferrules

Product properties

Product type	Circular connector (cable-side)
Application	Power supply
Sensor type	Power
Number of positions	5
No. of cable outlets	1
Shielded	yes
Coding	K
Cable outlet	straight

Data management status

Article revision	00

Insulation characteristics

Overvoltage category	III
Degree of pollution	3

Dimensions

Dimensional drawing	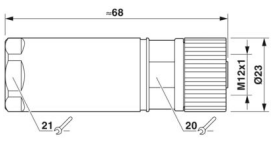
Length	68 mm

External dimensions

Outside diameter	8 mm ... 13 mm

Housing

Diameter housing	23 mm

Material specifications

Flammability rating according to UL 94	V0
Material of grip body	Brass, nickel-plated

Contact surface material	Au
Material for screw connection	Brass, nickel-plated

Connection data

Conductor connection

Connection method	Push-lock spring connection
Connection cross section	1.5 mm² ... 1.5 mm²
	0.75 mm² ... 2.5 mm² (with ferrule)
	1.5 mm² ... 1.5 mm² (solid)
Connection cross section AWG	16 ... 16 (without ferrule)
	18 ... 14 (with ferrule)
Stripping length of the individual wire	10 mm
Tightening torque	0.6 Nm (M12 knurl)
	5 Nm (Pressure nut with connector housing)

Pin assignment

Contact | Color (signal designation) | Contact (optional)	1 = BK1
	2 = BK2
	3 = BK3
	4 = BK4
	PE = GNYE

Electrical properties

Rated surge voltage	6 kV
Nominal voltage U_N	690 V AC
Nominal current I_N	16 A (when using 2.5 mm² conductors)
	16 A (at 40 °C)

Mechanical properties

Mechanical data

Insertion/withdrawal cycles	≥ 100

Connector

Connection 1

Head design	Socket
Head cable outlet	straight
Head thread type	M12
Coding	K

Cable/line

Signal type/category	Power
Stripping length of the individual wire	10 mm

Environmental and real-life conditions

Ambient conditions

Degree of protection	IP65
Ambient temperature (operation)	-40 °C ... 85 °C (Plug / socket)
Ambient temperature (assembly)	-5 °C ... 50 °C (Plug / socket)

Standards and regulations

Standard designation	M12 connector
Standards/specifications	based on IEC 61076-2-111

Drawings

Dimensional drawing

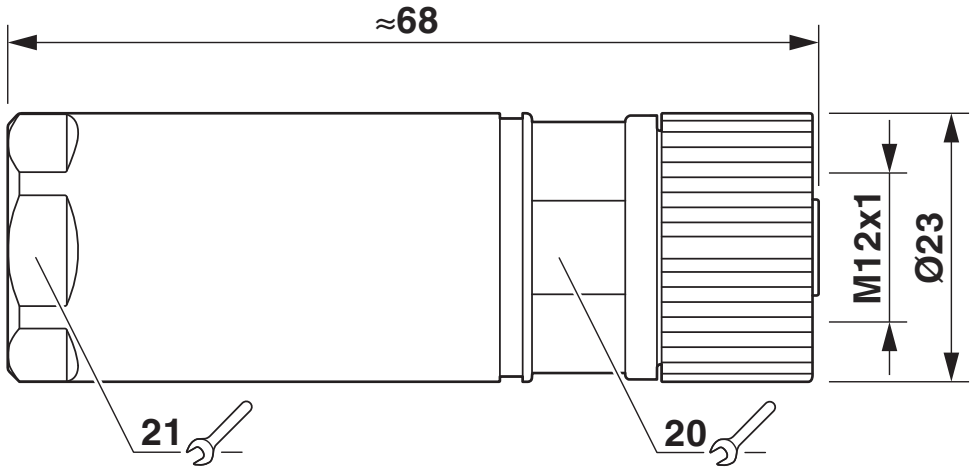

M12 x 1 socket, straight, shielded

Functional drawing

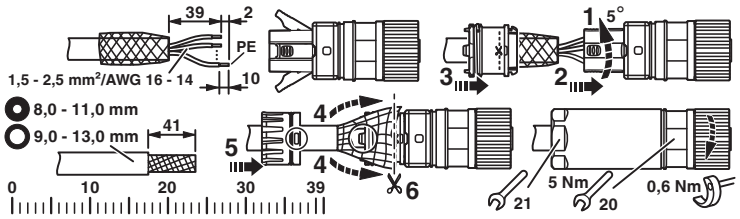

Schematic diagram

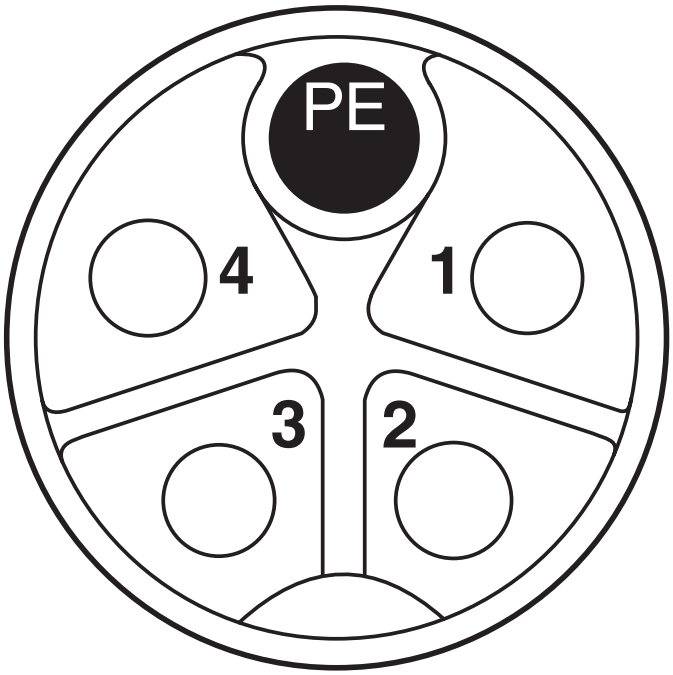

Pin assignment of M12 socket, 4-pos.+PE, K-coded, socket side view

Approvals

To download certificates, visit the product detail page: https://www.phoenixcontact.com/us/products/1080228

EAC
Approval ID: RU C-DE.BL08.B.00511

Classifications

ECLASS

ECLASS-11.0	27440102
ECLASS-12.0	27440116
ECLASS-13.0	27440116

ETIM

ETIM 9.0	EC002635

UNSPSC

UNSPSC 21.0	39121400

Environmental product compliance

EU RoHS

Fulfills EU RoHS substance requirements	Yes, No exemptions

China RoHS

Environment friendly use period (EFUP)	EFUP-E
	No hazardous substances above the limits

EU REACH SVHC

REACH candidate substance (CAS No.)	No substance above 0.1 wt%

Phoenix Contact 2024 © - all rights reserved
https://www.phoenixcontact.com

Phoenix Contact USA
586 Fulling Mill Road
Middletown, PA 17057, United States
(+717) 944-1300
info@phoenixcon.com