MI0805L301R-10

PHYSICAL DIMENSIONS:

A	2.00 [.079]	±	0.20 [.008]
B	1.25 [.049]	±	0.20 [.008]
C	0.90 [.035]	±	0.20 [.008]
D	0.51 [.020]	±	0.25 [.010]

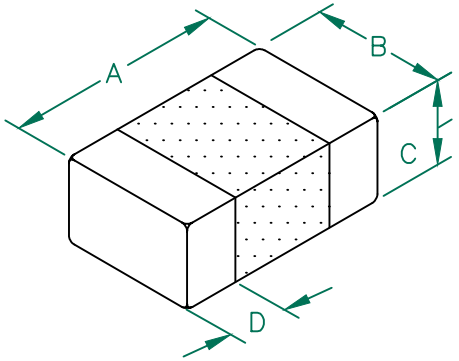

ELECTRICAL CHARACTERISTICS:			
Z @ 100MHz (Ω)		DCR (Ω)	Rated Current
Nominal	300		
Minimum	225		
Maximum	375	0.06	2000 mA

NOTES: UNLESS OTHERWISE SPECIFIED

1. TAPED AND REELED per CURRENT EIA SPECIFICATIONS 7" REELS, 4000 PCS/REEL, PAPER TAPE.
2. TERMINATION FINISH IS 100% TIN.
3. COMPONENTS SHOULD BE ADEQUATELY PREHEATED BEFORE SOLDERING.
4. OPERATING TEMP. RANGE: −40°C~+125°C. (INCLUDING SELF−HEATING)
5. COSMETIC SPECIFICATION REFER TO WI−QA−124.

Z vs FREQUENCY
IMPEDANCE UNDER DC BIAS

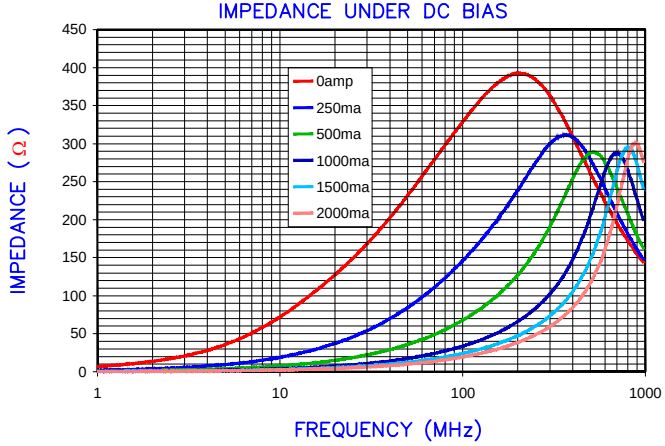

|Z| , R, AND X vs. FREQUENCY

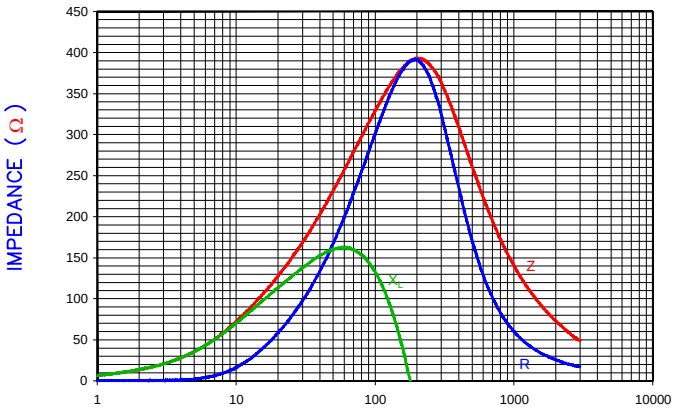

AGILENT E4991A RF Impedance/Material Analyzer
HP 16194A Test Fixture. TEST REF. 3227

LAND PATTERNS FOR REFLOW SOLDERING

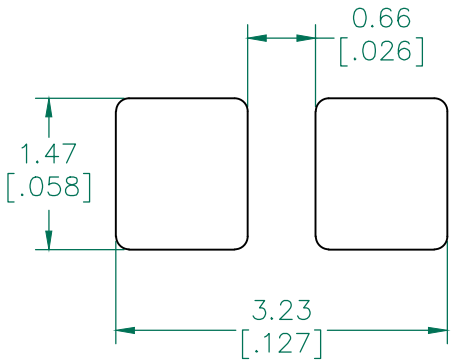

(For wave soldering, add 0.762 [.030] to this dimension)

RECOMMENDED SOLDERING CONDITIONS

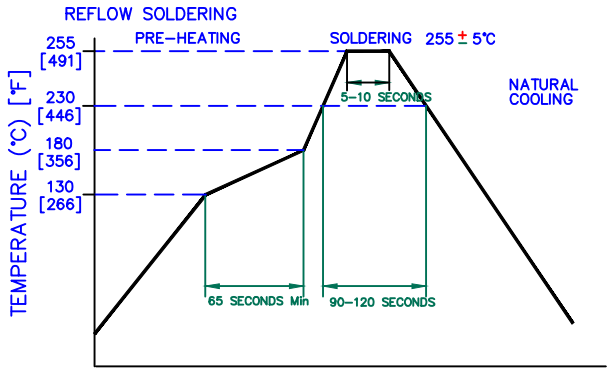

RoHS

REV	DESCRIPTION	DATE	INT
D	ADD OPERATING TEMPERATURE UPDATE LAIRD LOGO AND REFLOW CURVE	08/05/13	QU
C	CHANGE TO PAPER TAPE	03/04/10	JUN
B	UPDATE COMPANY LOGO ADD ROHS	8/18/08	JRK
A	ORIGINAL DRAFT	04/05/04	TMB

DIMENSIONS ARE IN mm [INCHES].

This print is the property of Laird Tech. and is loaned in confidence subject to return upon request and with the understanding that no copies shall be made without the written consent of Laird Tech. All rights to design or invention are reserved.

Laird

PROJECT/PART NUMBER:	REV	PART TYPE:	DRAWN BY:
MI0805L301R−10	D	CO−FIRE	TMB

DATE: 04/05/04 | SCALE: – | SHEET: 1 of 1

CAD # MI0805L301R−10−D | TOOL # –

Unikeyic Electronics

Global Electronic Components Distributor

Click to view pricing, inventory, delivery, and lifecycle information:

Laird:

29220104 LI0603G221R-10 MP1040-100 HI1206N680R-10 TYS30126R8M-10 A15754-04 HI0805O121R-10 LFB095051-000 LI0603B201R-10 28A0392-0A2 28A2005-0A2 28B0734-000 CMX1211Z601B-10 DA1206D301R-10 24296254 28B0500-100 28R1141-010 CC1812C513R-10 28A1507-0A2 CM3440Z171R-10 HF0402B102R-10 MI0805M221R-10 0097064502 CMX1211Z680B-10 DM3312X101R-10 MGV201610R68M-10 MI1210K600R-10 NS1050HA TRA6927M3PBN-001 0097061102