THIS IS A C.A.D. GENERATED DRAWING
DO NOT MAKE MANUAL REVISIONS TO MASTER.

ISSUE NUMBER
ORIGINAL ①

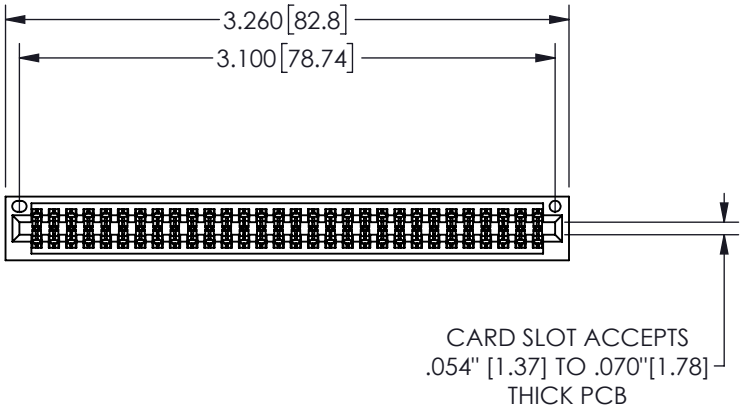

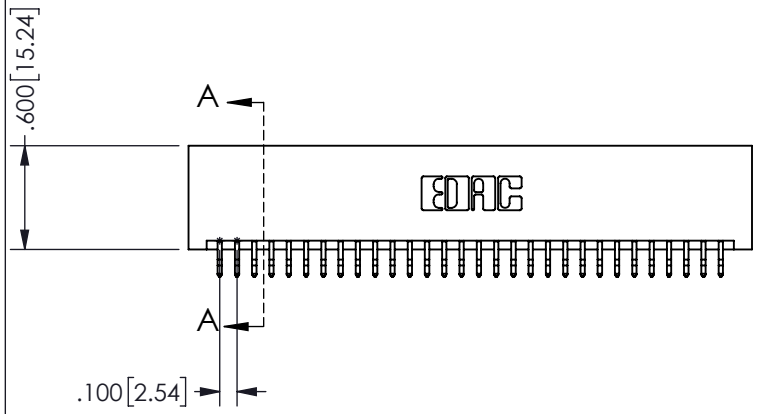

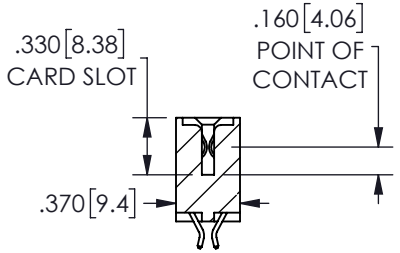

SECTION A-A

Contact Dimensions:
556-Extender Board Bend (Code 520 Contacts)
See Sheet 2 for Contact Code 555, 556, 558, 559, 560 Dimensions

345/395 SERIES CARD EDGE CONNECTOR
PART NUMBER: 345-060-556-201

EDAC INC
TORONTO, ONTARIO
CANADA
YOUR CONNECTION TO QUALITY & SERVICE

THESE DRAWINGS AND SPECIFICATIONS ARE THE PROPERTY OF EDAC INC.,AND SHALL NOT BE REPRODUCED,OR COPIED OR USED AS THE BASIS FOR THE MANUFACTURE OR SALE OF APPARATUS WITHOUT WRITTEN PERMISSION.

ACAD REFERENCE NO.	345-ENG-MASTER	
DRAWN: R.STA.MONICA	DATE:MAY.16/2017	
CHECKED:	DATE:	
SCALE: NTS	SHEET 1 OF 2	
DRAWING NUMBER 345-ENG-MASTER	ISSUE 1	

Contact Description:
559-90 Degree Bend (Code 541 Contacts)

THIS IS A C.A.D. GENERATED DRAWING
DO NOT MAKE MANUAL REVISIONS TO MASTER.

ISSUE NUMBER
ORIGINAL ①

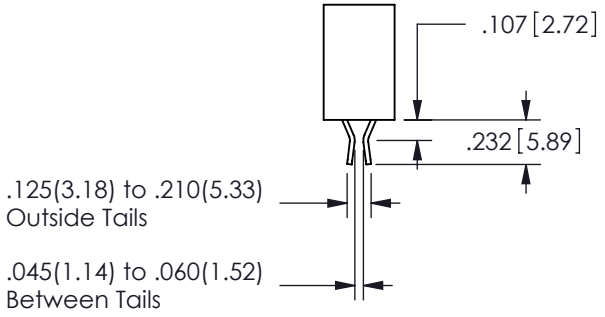

Contact Code 555

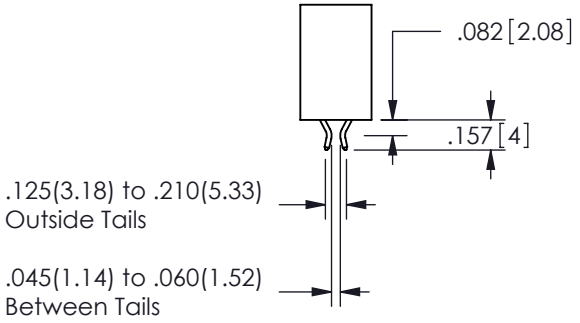

Contact Code 556

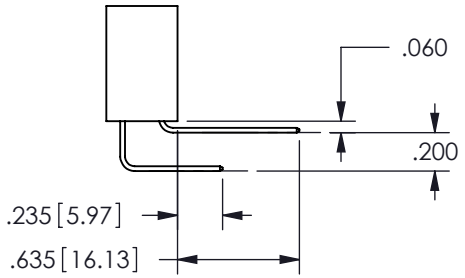

Contact Code 558

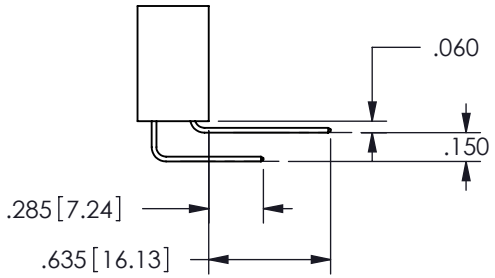

Contact Code 559

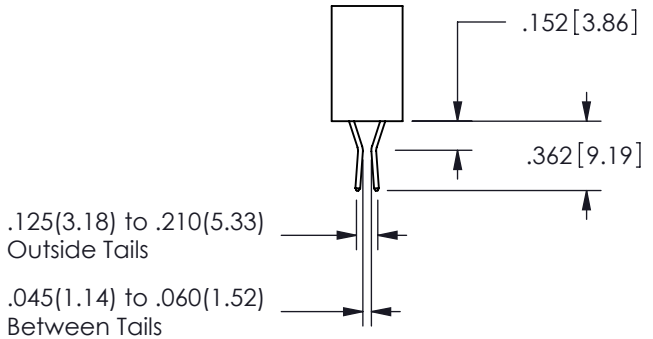

Contact Code 560

- INSULATOR MATERIAL: THERMOPLASTIC POLYESTER, UL 94V-0
- DAP MATERIAL AVAILABLE UPON REQUEST
- CONTACT MATERIAL; COPPER ALLOY
  CONTACT PLATING: GOLD ON THE MATING AREA, TIN PLATING ON THE CONTACT TAILS, NICKEL UNDERPLATE

345/395 SERIES CARD EDGE CONNECTOR
CONTACT CODE 555,556,558,559,560 DIMENSIONS

EDAC INC
TORONTO, ONTARIO
CANADA
YOUR CONNECTION TO QUALITY & SERVICE

THESE DRAWINGS AND SPECIFICATIONS ARE THE PROPERTY OF EDAC INC.,AND SHALL NOT BE REPRODUCED,OR COPIED OR USED AS THE BASIS FOR THE MANUFACTURE OR SALE OF APPARATUS WITHOUT WRITTEN PERMISSION.

ACAD REFERENCE NO.	345-ENG-MASTER	
DRAWN: R.STA.MONICA	DATE:MAY.16/2017	
CHECKED:	DATE:	
SCALE: 1:1	SHEET 2 OF 2	
DRAWING NUMBER 345-ENG-MASTER	ISSUE 1	

Unikeyic Electronics

Global Electronic Components Distributor

Click to view pricing, inventory, delivery, and lifecycle information:

EDAC:

345-100-500-202 516-020-000-252 516-090-000-451 345-050-500-202 345-140-520-201 341-010-521-201
355-024-520-201 355-030-500-202 516-056-000-102 516-090-000-201 570-260-001 346-086-520-202
337-030-527-204 395-036-527-204 516-090-000-302 516-294-591 621-009-260-033 395-044-520-202
516-251-095-100 516-251-238-107 516-020-000-402 516-090-000-301 346-100-541-202 307-028-520-202
337-086-527-202 345-020-540-802 355-044-500-202 423-047-520-102 346-050-540-201 337-024-527-202