NPN Darlington transistors

FEATURES

- High current (max. 0.5 A)
- Low voltage (max. 80 V)
- Integrated diode and resistor.

APPLICATIONS

- Industrial switching applications such as:
  - Print hammer
  - Solenoid
  - Relay and lamp driving.

DESCRIPTION

NPN Darlington transistor in a SOT89 plastic package.
PNP complements: BST60, BST61 and BST62.

MARKING

TYPE NUMBER	MARKING CODE
BST50	AS1
BST51	AS2
BST52	AS3

PINNING

PIN	DESCRIPTION
1	emitter
2	collector
3	base

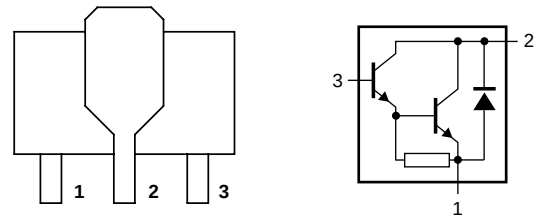

Fig.1 Simplified outline (SOT89) and symbol.

LIMITING VALUES

In accordance with the Absolute Maximum Rating System (IEC 134).

SYMBOL	PARAMETER	CONDITIONS	MIN.	MAX.	UNIT
V_{CBO}	collector-base voltage	open emitter			
	BST50		–	60	V
	BST51		–	80	V
	BST52		–	90	V
V_{CES}	collector-emitter voltage	V_{BE} = 0			
	BST50		–	45	V
	BST51		–	60	V
	BST52		–	80	V
V_{EBO}	emitter-base voltage	open collector	–	5	V
I_C	collector current (DC)		–	0.5	A
I_{CM}	peak collector current		–	1.5	A
I_B	base current (DC)		–	100	mA
P_{tot}	total power dissipation	$T_{amb} \leq 25$ °C; note 1	–	1.3	W
T_{stg}	storage temperature		–65	+150	°C
T_j	junction temperature		–	150	°C
T_{amb}	operating ambient temperature		–65	+150	°C

Note

1. Device mounted on a printed-circuit board, single sided copper, tinplated, mounting pad for collector 6 cm^2.

THERMAL CHARACTERISTICS

SYMBOL	PARAMETER	CONDITIONS	VALUE	UNIT
$R_{th\ j\text{-}a}$	thermal resistance from junction to ambient	note 1	96	K/W
$R_{th\ j\text{-}s}$	thermal resistance from junction to soldering point		16	K/W

CHARACTERISTICS

T_j = 25 °C unless otherwise specified.

SYMBOL	PARAMETER	CONDITIONS	MIN.	TYP.	MAX.	UNIT
I_{CES}	collector cut-off current					
	BST50	V_{BE} = 0; V_{CE} = 45 V	–	–	50	nA
	BST51	V_{BE} = 0; V_{CE} = 60 V	–	–	50	nA
	BST52	V_{BE} = 0; V_{CE} = 80 V	–	–	50	nA
I_{EBO}	emitter cut-off current	I_C = 0; V_{EB} = 4 V	–	–	50	nA
h_{FE}	DC current gain	V_{CE} = 10 V; note 1; (see Fig.2)				
		I_C = 150 mA	1000	–	–	
		I_C = 500 mA	2000	–	–	
V_{CEsat}	collector-emitter saturation voltage	I_C = 500 mA; I_B = 0.5 mA	–	–	1.3	V
		I_C = 500 mA; I_B = 0.5 mA; T_j = 150 °C	–	–	1.3	V
V_{BEsat}	base-emitter saturation voltage	I_C = 500 mA; I_B = 0.5 mA	–	–	1.9	V
f_T	transition frequency	I_C = 500 mA; V_{CE} = 5 V; f = 100 MHz	–	200	–	MHz
Switching times (between 10% and 90% levels); (see Fig.3)						
t_{on}	turn-on time	I_{Con} = 500 mA; I_{Bon} = 0.5 mA; I_{Boff} = –0.5 mA	–	400	–	ns
t_{off}	turn-off time		–	1500	–	ns

Note

1. Pulse test: $t_p \leq 300\ \mu s$; $\delta \leq 0.02$.

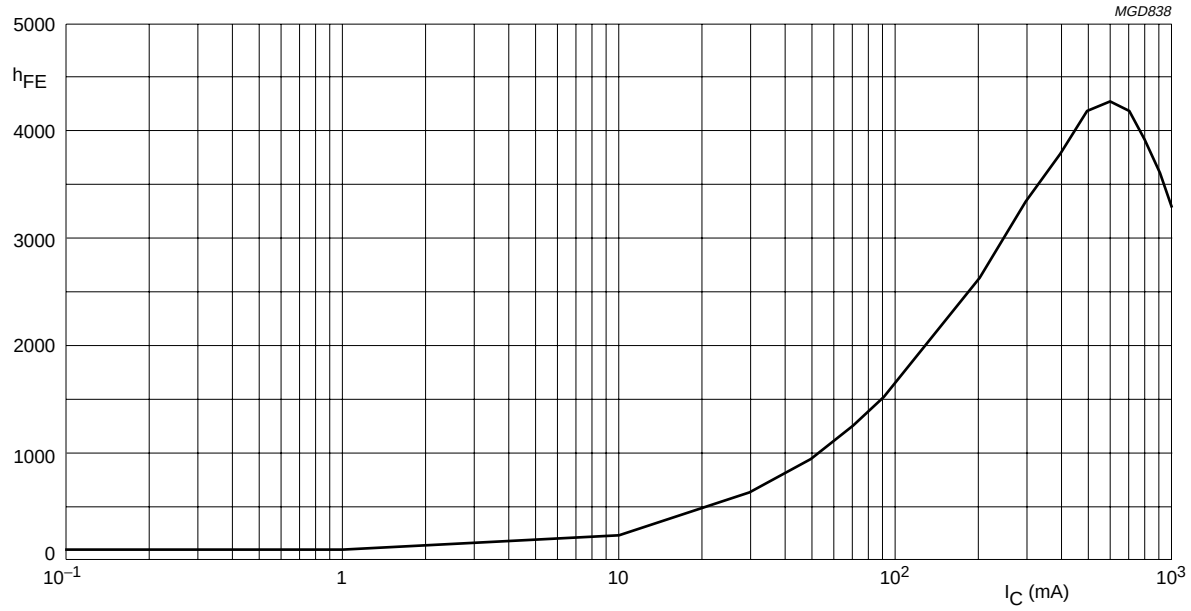

V_{CE} = 10 V.

Fig.2 DC current gain; typical values.

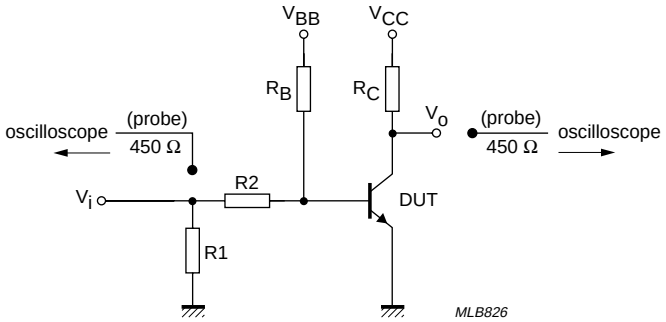

V_i = 10 V; T = 200 µs; t_p = 6 µs; $t_r = t_f \leq 3$ ns.
R1 = 56 Ω; R2 = 10 kΩ; R_B = 10 kΩ; R_C = 18 Ω.
V_{BB} = −1.8 V; V_{CC} = 10.7 V.
Oscilloscope: input impedance Z_i = 50 Ω.

Fig.3 Test circuit for switching times.