DESCRIPTION

This monolithic integrated circuit is an adjustable 3-terminalpositive voltage regulator designed to supply more than 1.5A of load current with an output voltage adjustable over a 1.2 to 37V.It employs internal current limiting , thermal shut-down and safe area compensation.

FEATURE

- Internal thermal overload protection
- Internal short circuit current limiting
- Output transistor safe operating area compensation

Reference News

SOT-223	SOT-252
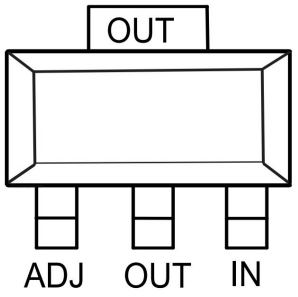	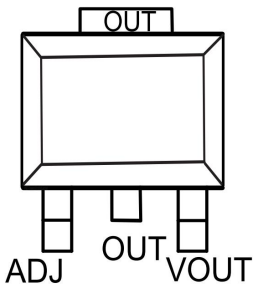

Internal Block Diagram

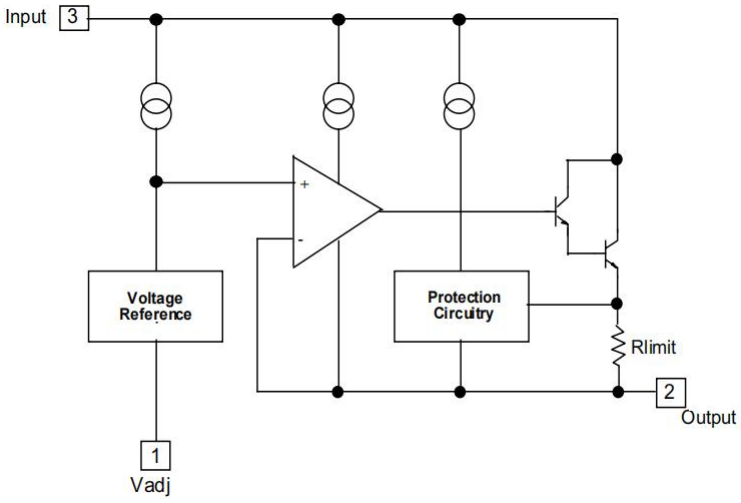

ORDERING INFORMATION

P/N	PKG	QTY
LM317MDT	TO-252	2500
LM317DCYR	SOT-223	2500

Absolute Maximum Ratings

Symbol	Parameter	Value	Units
V_I-V_O	Input-Output Voltage Differential	40	V
T_{LEAD}	Lead Temperature	230	℃
P_D	Power Dissipation	Internally limited	W
T_J	Operating Junction Temperature Range	0~85	℃
T_{stg}	Storage Temperature Range	-55~125	
$\Delta V_O/\Delta T$	Temperature Coefficient of Output Voltage	±0.02	%/℃

ELECTRICAL CHARACTERISTICS

(VO-VI=5V,IO=0.5A,0℃≤TJ≤+85℃ ,IMAX=1.5A,PDMAX=20W,unless otherwise specified)

Parameter	Symbol	Test conditions	MIN	TYP	MAX	UNIT
Line Regulation(note1)	R_{line}	T_A=25℃ 3V≤V_I-V_O≤40V		0.01	0.04	%/V
		3V≤V_I-V_O≤40V		0.02	0.07	
Load Regulation(note1)	R_{load}	T_A=25℃ , 10mA≤ I_O≤ I_{MAX} V_O<5V V_O≥5V		18 0.4	25 0.5	mV
		10mA≤ I_O≤ I_{MAX} V_O<5V V_O≥5V		40 0.8	70 1.5	%V_O
Adjustable Pin Current	I_{ADJ}	-		46	100	μA
Adjustable Pin Current Change	ΔI_{ADJ}	3V≤V_I-V_O≤40V 10mA≤ I_O≤ I_{MAX}, P_D≤ P_{MAX}		2.0	5	
Reference Voltage	V_{REF}	3V≤V_{IN}-V_O≤40V 10mA≤ I_O≤ I_{MAX}, P_D≤ P_{MAX}	1.20	1.25	1.30	V
Temperature Stability	ST_T	-		0.7		%/ V_O
Minimum Load Current to Maintain Regulation	$I_{L(MIN)}$	V_I-V_O=40V		3.5	12	mA
Maximum Output Current	$I_{O(MAX)}$	V_I-V_O≤15V, P_D≤ P_{MAX} V_I-V_O≤40V, P_D≤ P_{MAX} T_A=25℃	1.0	2.2 0.3		A
RMS Noise,% of V_{OUT}	N	T_A=25℃ ,10Hz≤f≤10KHz		0.003	0.01	%/ V_O
Ripple Rejection	RR	V_O=10V, f =120Hz without C_{ADJ} C_{ADJ}=10μF(note2)	66	60 75		dB
Long-Term Stability,T_J=T_{HIGH}	ST	T_A=25℃ for end point mesasurements, 1 0 0 0 HR		0.3	1	%
Thermal Resistance Junction to case	$R_{\theta JC}$	-		5		℃/W

PACKAGE MECHANICAL DATA

SOT-252

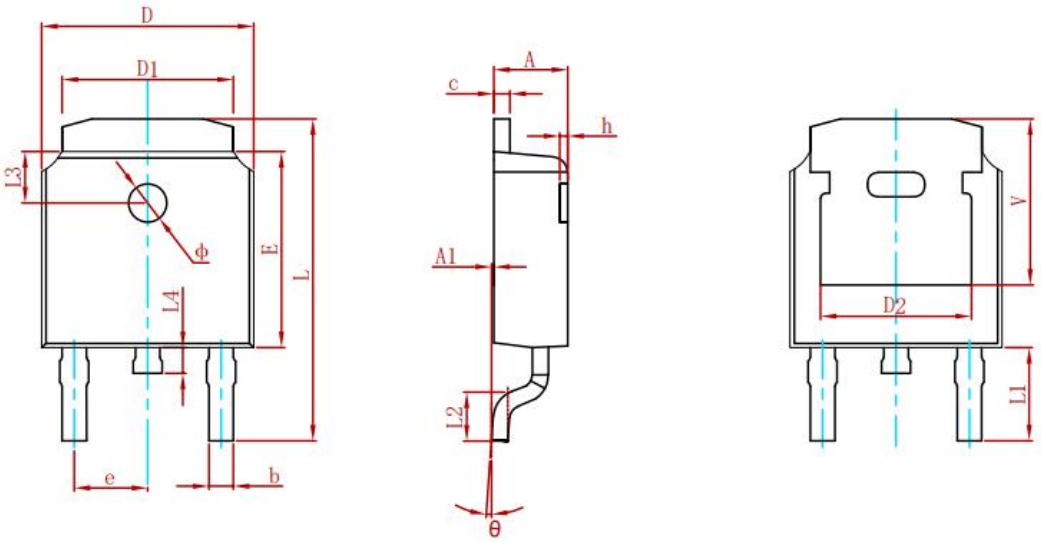

Symbol	Dimensions In Millimeters		Dimensions In Inches	
	Min.	Max.	Min.	Max.
A	2.200	2.400	0.087	0.094
A1	0.000	0.127	0.000	0.005
b	0.635	0.770	0.025	0.030
c	0.460	0.580	0.018	0.023
D	6.500	6.700	0.256	0.264
D1	5.100	5.460	0.201	0.215
D2	4.830 REF.		0.190 REF.	
E	6.000	6.200	0.236	0.244
e	2.186	2.386	0.086	0.094
L	9.712	10.312	0.382	0.406
L1	2.900 REF.		0.114 REF.	
L2	1.400	1.700	0.055	0.067
L3	1.600 REF.		0.063 REF.	
L4	0.600	1.000	0.024	0.039
Φ	1.100	1.300	0.043	0.051
θ	0°	8°	0°	8°
h	0.000	0.300	0.000	0.012
V	5.250 REF.		0.207 REF.	

Suggested Pad Layout

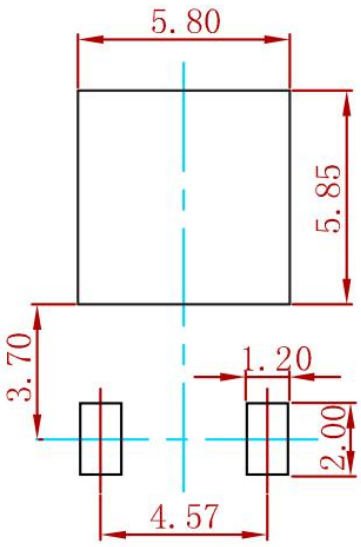

Note:
1.Controlling dimension:in millimeters.
2.General tolerance:±0.05mm.
3.The pad layout is for reference purposes only.

PACKAGE MECHANICAL DATA

SOT-223

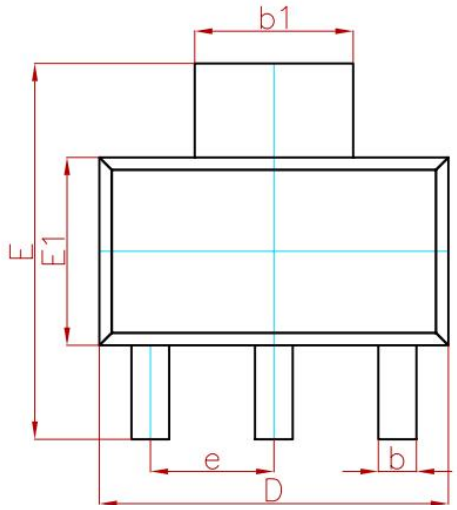

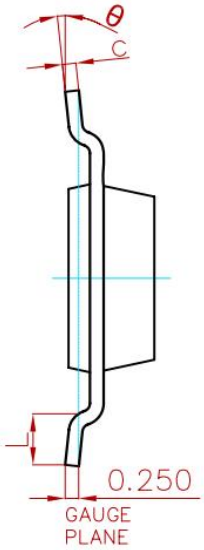

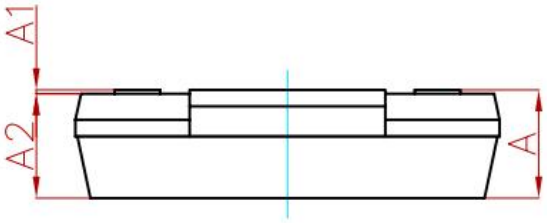

Symbol	Dimensions In Millimeters		Dimensions In Inches	
	Min.	Max.	Min.	Max.
A	——	1.800	——	0.071
A1	0.020	0.100	0.001	0.004
A2	1.500	1.700	0.059	0.067
b	0.660	0.840	0.026	0.033
b1	2.900	3.100	0.114	0.122
c	0.230	0.350	0.009	0.014
D	6.300	6.700	0.248	0.264
E	6.700	7.300	0.264	0.287
E1	3.300	3.700	0.130	0.146
e	2.300(BSC)		0.091(BSC)	
L	0.750	——	0.030	——
θ	0°	10°	0°	10°

Suggested Pad Layout

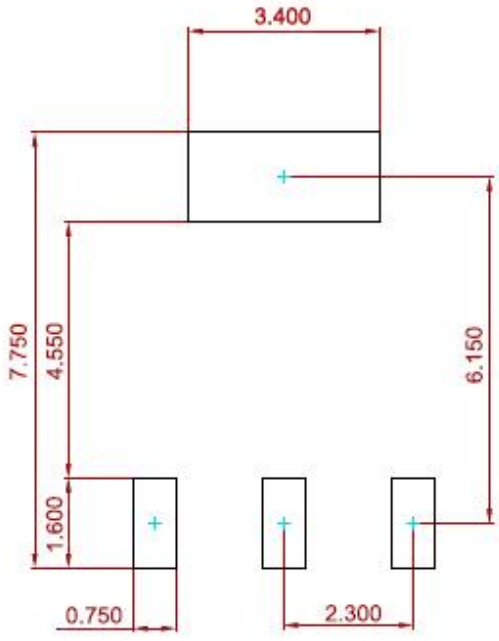

Note:
1.Controlling dimension:in millimeters.
2.General tolerance:±0.05mm.
3.The pad layout is for reference purposes only.