

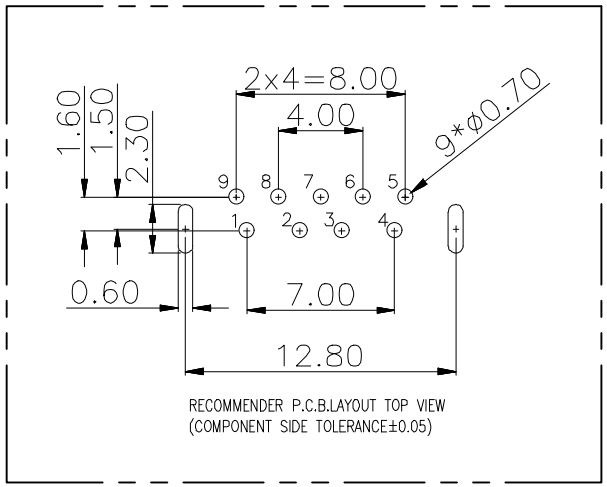

RECOMMENDER P.C.B.LAYOUT TOP VIEW
(COMPONENT SIDE TOLERANCE±0.05)

NOTES:
1. MATERIAL:
   1.1.HOUSING: LCP ,COLOR IS BLUE,HIGH TEMPERATURE PLASTIC;
   1.2.CONTACT: BRASS (H65 T=0.20&0.25mm);
   1.3.SHELL: COLD ROLLED IRON (SPCC T=0.30mm);
2. ELECTRICAL:
   4.1. VOLTAGE RATING: 30V DC ;
   4.2. CURRENT RATING: 1.5A ;
   4.3. CONTACT RESISTANCE: 30MILLIOHMS MAX.;
   4.4. WITHSTAND VOLTAGE: 100 VAC RMS 50(60)Hz,1MIN.;
   4.5. INSULATION RESISTANCE: 100MEGOHMS MIN @500V DC;
5. MECHANICAL:
   5.1. MATING FORCE: 35N MAX.;
   5.2. UNMATING FORCE: 5~35N ;
   5.3. OPERATING LIFE: 1500 CYCLES MIN.;
6. PLATING:
   6.1. TERMINAL:
        NI PLATING OVER ALL,
        Tin PLATING ON SOLDER AREA,
        Au G/Fu" ON CONTACT AREA;
   6.2.SHELL: NI PLATING OVER ALL;
7. ENVIRONMENTAL:
   7.1. STORAGE TEMPERATURE RANGE: -40°C~+85°C;
   7.2. OPERATION TEMPERATURE RANGE: -25°C~+70°C;

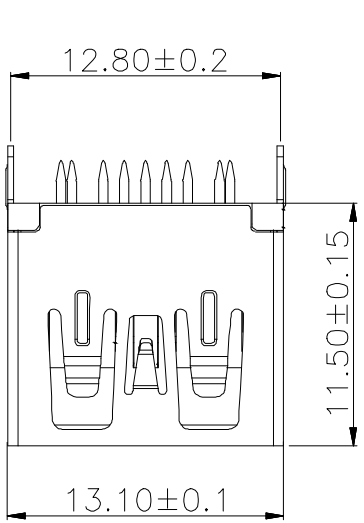

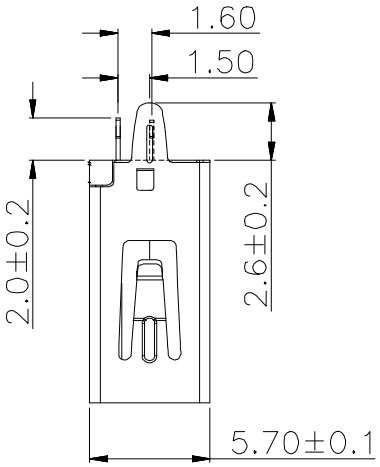

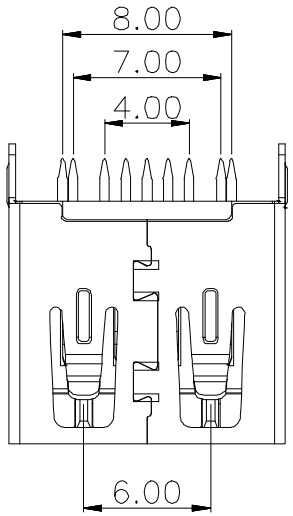

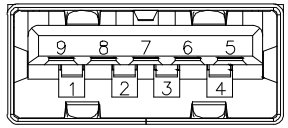

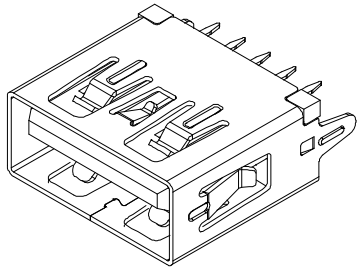

PIN NUMBER	SIGNAL NAME
PIN 1	Vbus
PIN 2	D-
PIN 3	D+
PIN 4	GND
PIN 5	StdA_SSRX-
PIN 6	StdA_SSRX+
PIN 7	GND_DRAIN
PIN 8	StdA_SSTX-
PIN 9	StdA_SSTX+
SHELL	GND

			GENERL TOLERANCE	制 图 DRAWING		深圳市华灿天禄电子有限公司 ShenzhenhuacantianluELECTRONICS CO.,LTD		
			DIM TOL	审 核 CHECK				
			X.X ±0.30	批 准 APPROVAL		产品名称 TITLE	TYPE AF 9P 3.0 180° L11.5mm 直脚 平口	版 本 REV. A
			X.XX ±0.20	比 例 SCALE		产品料号 PART NO.	HC-ST-003-02-11.5-Z	单 位 UNITS mm
			X.XXX ±0.10					
序号 No.	变更内容 MODIFY CONTENT	日 期 MODIFY DATE	Angle ±3.0°	投 影 Projection		材 料 MATERIAL		页 次 SHEET 1/1
1	初版发行							

Unikeyic Electronics

Global Electronic Components Distributor

Click to view pricing, inventory, delivery, and lifecycle information:

HCTL:

PZ254-2-13-Z-C HC-PH-6AW-G HC-PH-7AWT PM254-1-11-W-8.5 PM254-2-25-WS-8.5 PZ200-1-06-Z-C HC-FPC-03-10-29RLTAG HC-FPC-05-LT-28RLTAG HC-GH-7PWT HC-HY-8AW PM127-1-04-4.3-G0 PM200-1-18-W-4.3 HC-FPC-05-09-28RLTAG HC-PHB-2*11AW-05 PZ127-2-16-Z HC-FPC-03-09-23RLTAG CT05202-240R-00-D HC-ZH-6Y HC-ZH-8Y PM127-1-10-4.3-G0 PM127-2-19-Z-4.3-G0 TC-0513-5-260G HC-1.25-5Y HC-FPC-03-10-71RLTAG HC-PHD-2*5Y PZ200-2-14-W PZ254-1-09-Z-C HC-PH-8Y PZ200-2-17-Z-C TC-6601-4.3-260G