1 Product Identification

GDNRA	201610	-	1R0	M	T	F
①	②		③	④	⑤	⑥

① Product Alloy Series

② Dimensions（See two）

③ Inductance Value (1R0:1.0μH)

④ Inductance Tolerance (J:±5%;K:±10%; M:±20%; N:±30%)

⑤ Packaging Style (B: Bulk; T: Tape & Reel)

⑥ Lead Free

2 Appearance, Dimensions(mm)

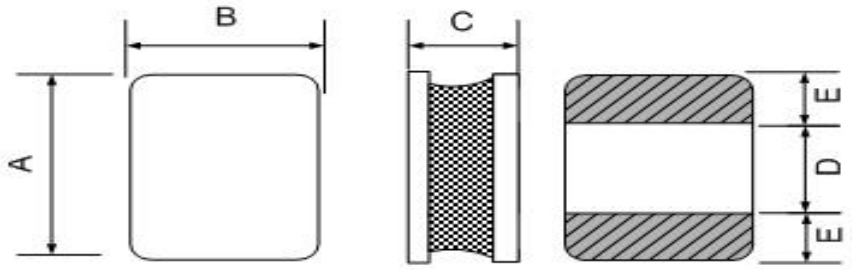

A	B	C	D	E
2.00±0.30	1.60±0.30	1.00Max.	0.80±0.2	0.60±0.2

LAND PATTERN DIMENSIONS

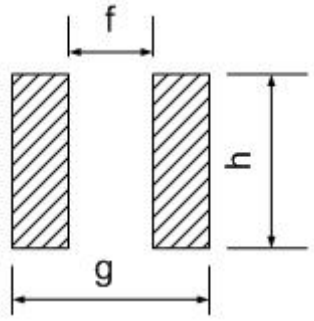

/	mm
f	0.70
g	2.20
h	1.70

3 Specifications

Part No.	Inductance L0(uH) ±20% @100KHz/1V	RDC (mΩ) Max	Saturation Current (A) Max	Heat Rating Current(A) Max
GDNRA201610-1R0MTF	1.0	115	3.0	2.4
GDNRA201610-1R5MTF	1.5	180	2.5	2.2
GDNRA201610-2R2MTF	2.2	260	2.2	1.8
GDNRA201610-3R3MTF	3.3	400	1.6	1.4
GDNRA201610-4R7MTF	4.7	500	1.5	1.3
GDNRA201610-100MTF	10.0	1040	0.8	0.6

※ Note

*Rated current is the DC current that reduces the initial inductance by 30% or when the temperature rises △ T = 40℃

4 Packaging

(1) Dimensions of Reel（mm）

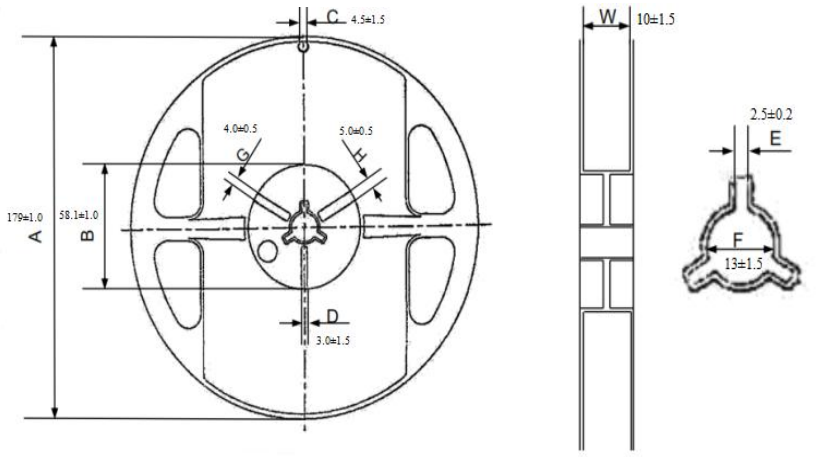

(2) Dimensions of Tape (mm):

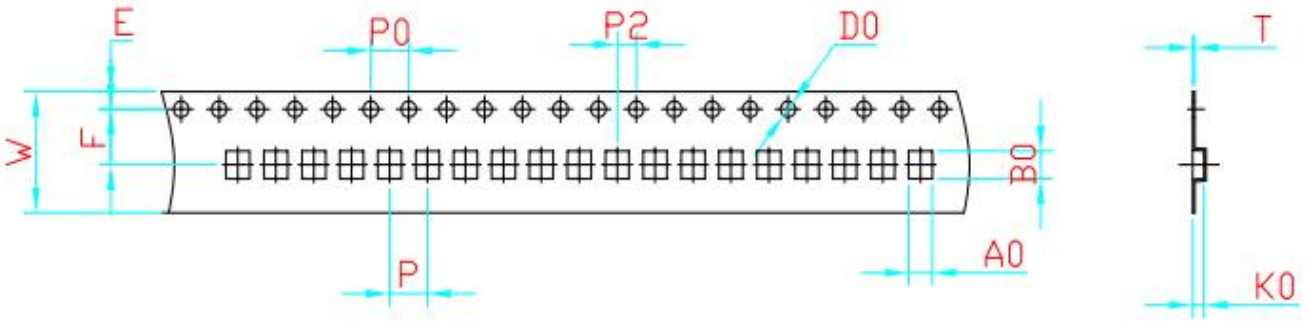

W	A0	B0	K0	P	F	E	D	P0	P2	T	Packaging quantity
8.0 ±0.3	2.0 ±0.1	2.35 ±0.1	1.3 ±0.1	4.0 ±0.1	3.5 ±0.1	1.75 ±0.1	1.55+ 0.1/-0.0	4.0 ±0.1	2.0 ±0.1	0.21 ±0.05	2000PCS/REEL