Kinghelm®

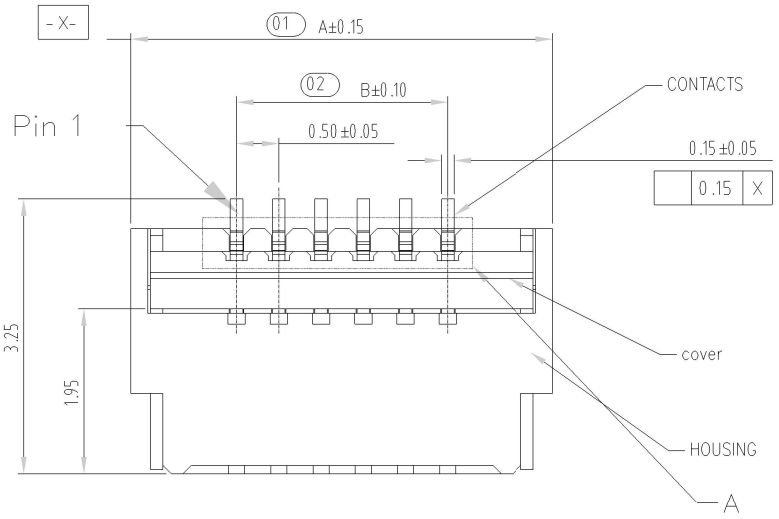


NOTE:

1. MATERIAL:
   HOUSING: LCP (UL94V-0), COLOR: NATURAL.
   CONTACTS: COPPER ALLOY.
   PEG: COPPER ALLOY.
   ACTUATOR: LCP (UL94-V0). COLOR:BLACK
2. RATING:
   OPERATING VOLTAGE: 50Vrms AC.
   CURRENT RATING: 0.5A.
   OPERATING TEMPERATURE: -55° C~+85° C.
   OPERATING HUMIDITY RANGE: RELATIVE HUMIDITY 90% MAX.(NO CONDENSATION)
   STORAGE TEMPERATURE RANGE: -10° C~+50° C.
   STORAGE HUMIDITY RANGE: RELATIVE HUMIDITY 90% MAX.(NO CONDENSATION)

3.Pater Number:

带 (XX) 为重点管控尺寸

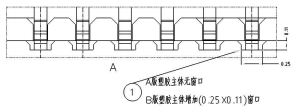


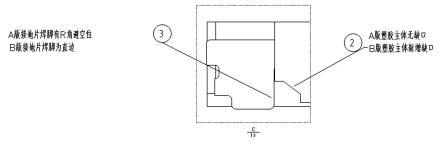


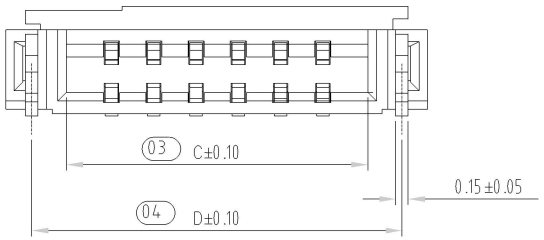


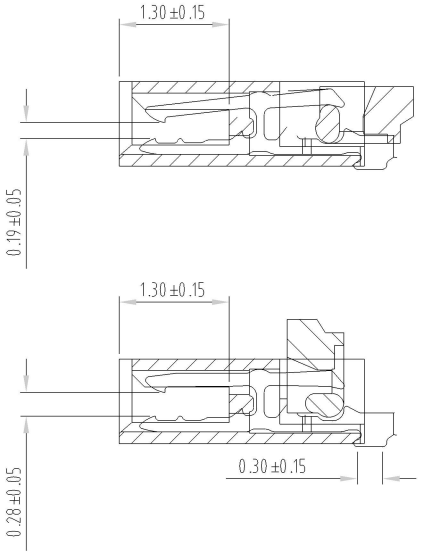


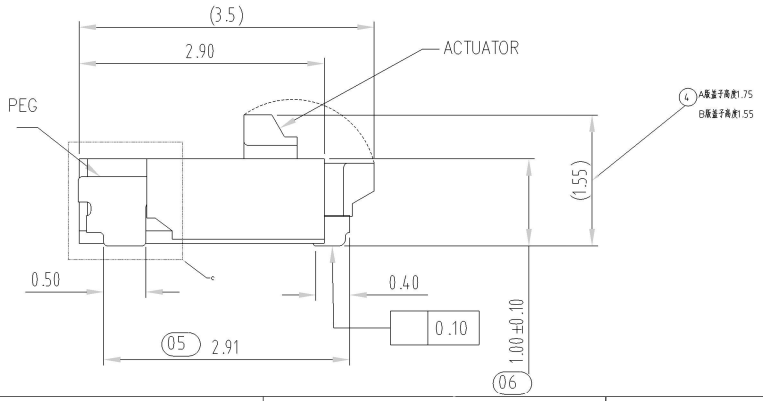


| REV | DESCRIPTION | ECN.NO | BY | DATE |
|---|---|---|---|---|
| B | ① 塑胶主体增加(0.25X0.11)窗口<br>② 塑胶主体新增缺口<br>③ 接地片焊脚R角改为直边<br>④ 盖子高度1.75改为1.55 | 20210510001 | liupeng | 2021/5/10 |
| A | NEW DRAWING | | liupeng | |

本产品需符合 □RoHS √SONY00259 □HF □ 其它 √
※禁止使用本公司所禁用有毒物质

| - TOLERANCES- UNLESS OTHERWISE SPECIFIED 公差參考表 | | | |
|---|---|---|---|
| X.X | :±0.30 | X.X° | :±5° |
| X.XX | :±0.20 | X.XX° | :±2° |
| X.XXX | :±0.10 | X.XXX° | :±1° |

| 深圳市金航标电子有限公司 | www.kinghelm.com.cn |
|---|---|
| KH-FPC0.5-H1.0SMT-22P-QCHF | 0755-28190160 |

APPD: 核准:
CHECK: 校對:
DRAW: LIUPENG 繪圖:

TITLE: 產品名稱: FPC 0.5Pitch 1.0H ZIF R/A Connector
DWG NO: 產品料號: FP242AH-0XXG10M

| DATE | SCALE | UNIT | PAGE |
|---|---|---|---|
| 20111209 | 1:1 | mm | 1/2 |

Kinghelm®

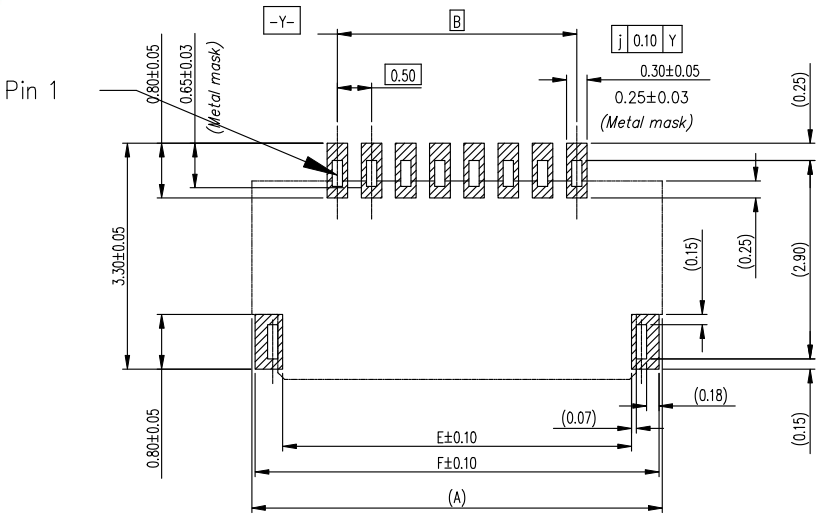


Recommended PCB mounting pattern and metal mask dimensions

Recommended metal mask thickness: t=0.1

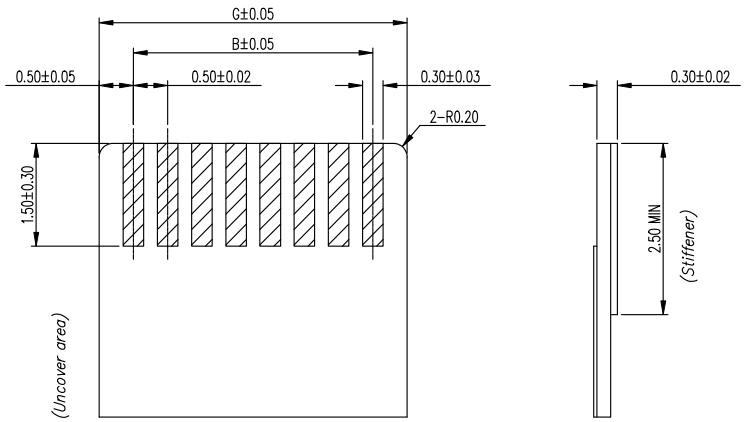


Recommended FPC/FFC Dimensions

| | | | | | | | |
|---|---|---|---|---|---|---|---|
| 50 | 27.00 | 24.50 | 25.57 | 26.39 | 26.10 | 26.90 | 25.50 |
| 45 | 24.50 | 22.00 | 23.07 | 23.89 | 23.60 | 24.40 | 23.00 |
| 40 | 22.00 | 19.50 | 20.57 | 21.39 | 21.10 | 21.90 | 20.50 |
| 34 | 19.00 | 16.50 | 17.57 | 18.39 | 18.10 | 18.90 | 17.50 |
| 32 | 18.00 | 15.50 | 16.57 | 17.39 | 17.10 | 17.90 | 16.50 |
| 30 | 17.00 | 14.50 | 15.57 | 16.39 | 16.10 | 16.90 | 15.50 |
| 28 | 16.00 | 13.50 | 14.57 | 15.39 | 15.10 | 15.90 | 14.50 |
| 26 | 15.00 | 12.50 | 13.57 | 14.39 | 14.10 | 14.90 | 13.50 |
| 24 | 14.00 | 11.50 | 12.57 | 13.39 | 13.10 | 13.90 | 12.50 |
| 22 | 13.00 | 10.50 | 11.57 | 12.39 | 12.10 | 12.90 | 11.50 |
| 20 | 12.00 | 9.50 | 10.57 | 11.39 | 11.10 | 11.90 | 10.50 |
| 18 | 11.00 | 8.50 | 9.57 | 10.39 | 10.10 | 10.90 | 9.50 |
| 16 | 10.00 | 7.50 | 8.57 | 9.39 | 9.10 | 9.90 | 8.50 |
| 14 | 9.00 | 6.50 | 7.57 | 8.39 | 8.10 | 8.90 | 7.50 |
| 12 | 8.00 | 5.50 | 6.57 | 7.39 | 7.10 | 7.90 | 6.50 |
| 11 | 7.50 | 5.00 | 6.07 | 6.89 | 6.60 | 7.40 | 6.00 |
| 10 | 7.00 | 4.50 | 5.57 | 6.39 | 6.10 | 6.90 | 5.50 |
| 8 | 6.00 | 3.50 | 4.57 | 5.39 | 5.10 | 5.90 | 4.50 |
| 7 | 5.50 | 3.00 | 4.07 | 4.89 | 4.60 | 5.40 | 4.00 |
| 6 | 5.00 | 2.50 | 3.57 | 4.39 | 4.10 | 4.90 | 3.50 |
| 5 | 4.5 | 2.00 | 3.07 | 3.89 | 3.60 | 4.50 | 3.00 |
| 4 | 4.00 | 1.50 | 2.57 | 3.39 | 3.10 | 3.90 | 2.50 |
| Number of Contacts | DIM A | DIM B | DIM C | DIM D | DIM E | DIM F | DIM G |

本产品需符合 □RoHS ☑SONY00259 □HF □ 其它 ✓
※禁止使用本公司所禁用有毒物质

| REV | DESCRIPTION | ECN.NO | BY | DATE |
|---|---|---|---|---|
| B | 盖子高度由1.75改为1.55MM | 2021051001 | liupeng | 2021/5/10 |
| A | NEW DRAWING | | liupeng | |

-TOLERANCES-
UNLESS OTHERWISE SPECIFIED
公差 考表

| | | | |
|---|---|---|---|
| X.X | :±0.30 | X.X° | :±5° |
| X.XX | :±0.20 | X.XX° | :±2° |
| X.XXX | :±0.10 | X.XXX° | :±1° |

深圳市金航标电子有限公司 www.kinghelm.com.cn
KH-FPC0.5-H1.0SMT-22P-QCHF 0755-28190160

APPD: 核准:
CHECK: 校 :
DRAW: : LIU

TITLE: 品名 : FPC 0.5Pitch 1.0H ZIF R/A Connector
DWG NO: 品料 : FP242AH-0XXG10M

| DATE | SCALE | UNIT | PAGE |
|---|---|---|---|
| 20111209 | 1:1 | mm | 2/2 |

Kinghelm®

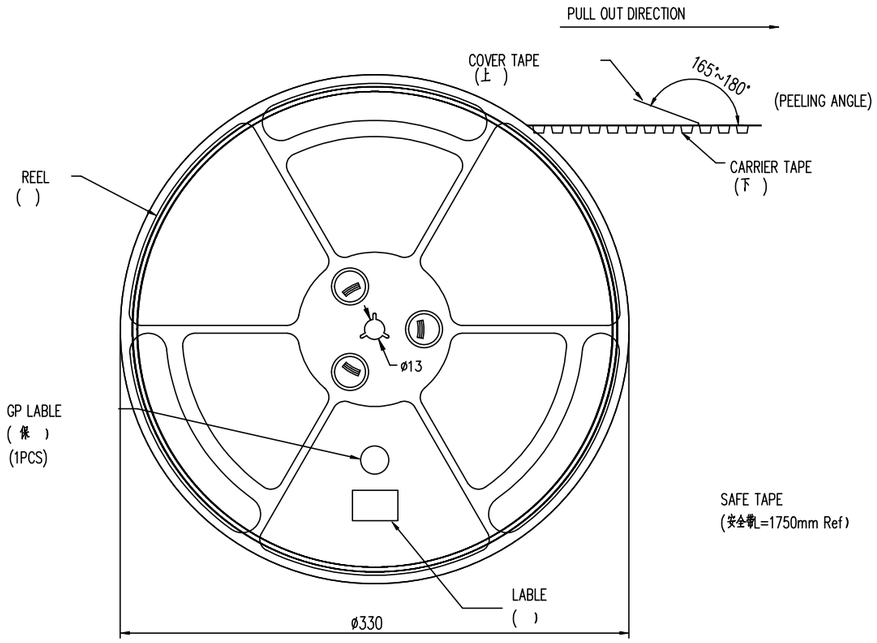


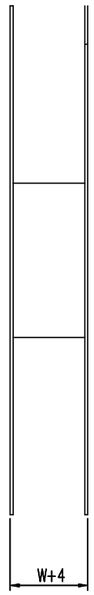


SAFE TAPE
(安全帶L=1750mm Ref)

SCALE 1:4

NOTE:

1.10 Sprocket hole pitch cumulative tolerance ±0.20.
2.Carrier camber is within 1mm in 100mm.
3.Material: black conductive polystyrene alloy.
4.Material Thickness: 0.3±0.05mm.
5.All dimensions meet EIA-481-B requirements.
6.4000pcs Pef Reel.
7.For tape width(dim W)16 and 24mm
pilot holes are provided on one sides.
For tape width(dim W)32, 44 and 56mm
pilot holes are provided on both sides.

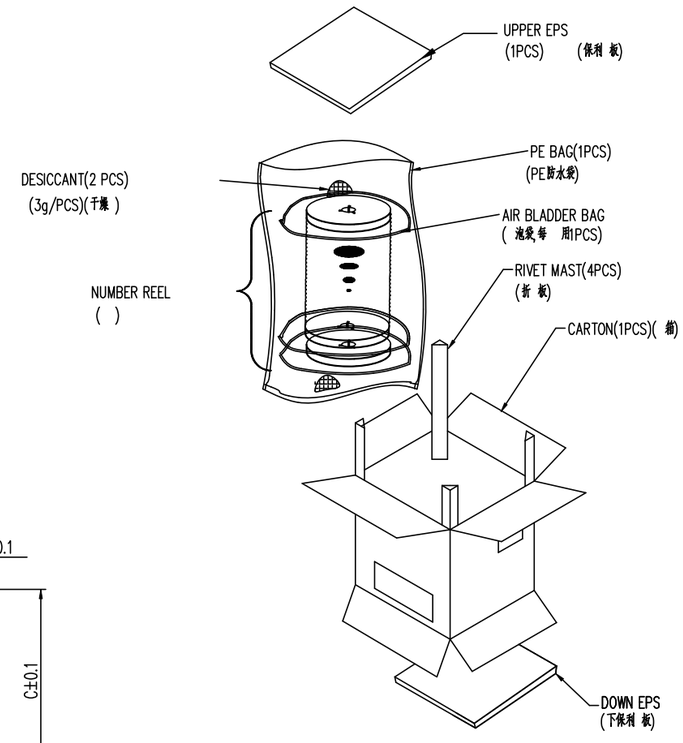


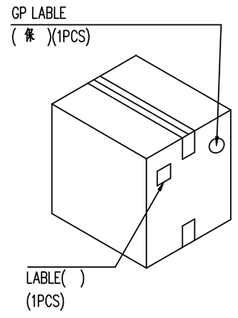


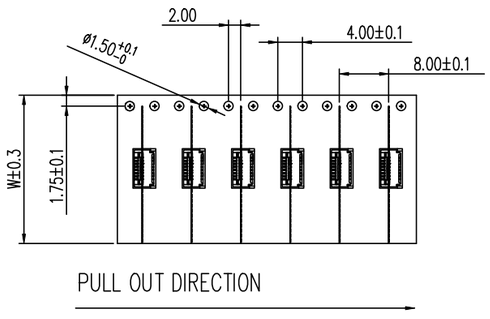


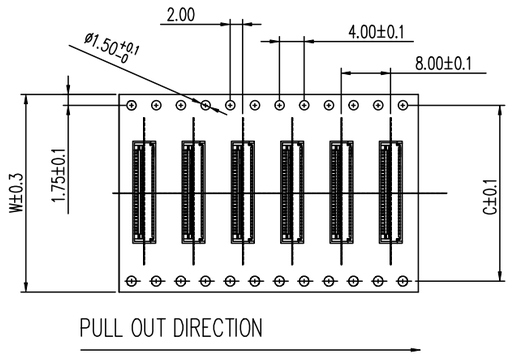


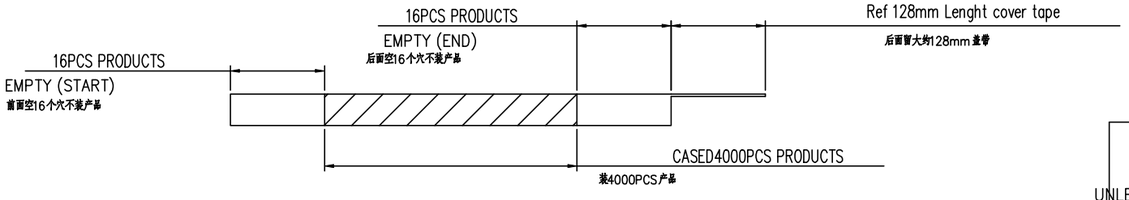


| PIN NO. | W | C | PCS /REEL | REEL/CARTON | SUM(PCS) |
|---|---|---|---|---|---|
| 04PIN~14PIN | 16 | – | 4000 | 14 | 56000 |
| 16PIN~24PIN | 24 | – | 4000 | 10 | 40000 |
| 28PIN~39PIN | 32 | 28.4 | 4000 | 8 | 32000 |
| 40Pin~50PIN | 44 | 40.4 | 4000 | 6 | 24000 |

本产品需符合 □RoHS ☑SONY00259 □HF □其他 ✓
※禁止使用本公司所禁用有毒物质

| REV | DESCRIPTION | ECN.NO | BY | DATE |
|---|---|---|---|---|
| A | New Drawing | | LIU | 02/27'13 |

-TOLERANCES-
UNLESS OTHERWISE SPECIFIED
公差 考表

| | | | |
|---|---|---|---|
| X.X | :±0.30 | X.X° | :±5° |
| X.XX | :±0.20 | X.XX° | :±2° |
| X.XXX | :±0.10 | X.XXX° | :±1° |

深圳市金航标电子有限公司 www.kinghelm.com.cn
KH-FPC0.5-H1.0SMT-22P-QCHF 0755-28190160

APPD: 核准:
CHECK: 校 :
DRAW: : LIU

TITLE: 品名 : 0.5mm Pitch FPC Connector
DWG NO: 品料 : FP242AH-0XXG10M

| DATE | SCALE | UNIT | PAGE |
|---|---|---|---|
| | 1:1 | mm | 1/1 |

# Unikeyic Electronics

Global Electronic Components Distributor

Click to view pricing, inventory, delivery, and lifecycle information:

## Kinghelm:

KH-2PH180-1X14P-L8.7 KH-4.5X4.5X6H-TJ KH-6X6X6H-TJ KH-FFC-V0.5-32P-150MM KH-HDMI-0024-JBS KH-HDMI-0035-PK KH-1.27PH90-1X16P-L10.5 KH-1.27PH90-1X20P-L10.5 KH-081-TX100-IPEX4 KH-2.54TXM-CB-H13.5-G KH-FFC-V0.5-8P-150MM KH-2.54TXM-CB-H13.5 KH-6X6X6H-SMT-FS KH-PH-2P-Z KH-4.5X4.5X6.5H-SMT KH-6X6X9H-STM KH-BM2.54-2P-W KH-DR9S-F8.1-1 KH-MCX-K507-W KH-2.54PH180-1X8P-L11.5 KH-2.54PH90-1X15P-L13.8 KH-300922-TP KH-1.27PH90-2X10P-L10.5 KH-4.5X4.5X10H-B3J KH-6X6X10H-STM KH-IPEX-K501-29 KH-SMA-K513-11G KHA(RG1.13)-TX50-IPEX KH-2.54FH-1X15P-H8.5 KH-PCIE5.2H-52P