Glenair®

Series 79 Micro-Crimp
Section D: Cable Connectors, Crimp Termination

CABLE PLUGS WITH SOCKET CONTACTS, CRIMP TERMINATION, 790-025S



790-025S connectors feature machined aluminum shells and wire grommets for environmental protection. Contacts are rear-release snap-in crimp type. Connectors are supplied with crimp contacts packaged separately. Size #23 signal pins accept up to #22 AWG wire. Size #16 contacts accept #16-18 AWG wire. Size #12 contacts accept #12-14 AWG wire. Size 12 and 16 cavities also accept coaxial contacts purchased separately. Connector shell features a groove for attachment of a low-profile EMI adapter 799-015, ordered separately.

HOW TO ORDER

Sample Part Number

790-025S	H-5P5	E	M	S
Part Number	**Shell Size - Insert Arr.**	**EMI Spring**	**Shell Finish**	**Hardware Option**

790-025S
Cable Plug With Socket Contacts

See Table 1 for Available Insert Arrangements

To order a connector without size #16 or #12 power pins, substitute "W" instead of "P" in the insert arrangement.

Example:

36P2 is supplied with 2 power pins.

36W2 is supplied less the power pins.

See Section B for coaxial contacts purchased separately.

E
EMI Spring

N
No Spring

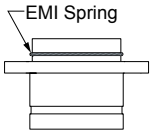

M
Electroless Nickel
general purpose applications

MT
Nickel-PTFE
1000 Hour Grey™ maximum corrosion protection and durability (non-reflective grey)

ZNU
Zinc-Nickel with Black Chromate
tactical applications (non-reflective black)

Additional shell finishes are listed on page C-9.

N
Thru-Hole
No Hardware

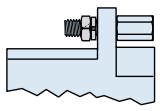

P
Female Jackpost

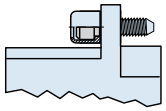

L
Low-Profile Captivated Jackscrew, Hex Head

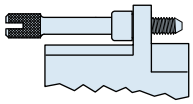

K
Slot-Head Extended Jackscrew

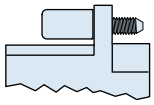

S
Low-Profile Captivated Screwlock, Hex Head

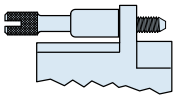

T
Slot-Head Extended Captivated Screwlock

SPECIFICATIONS

Current Rating	#23 5 AMPS, #16 13 A., #12 23 A.
Dielectric Withstanding Voltage	#23 500 VAC RMS, #12 and #16 1800 VAC RMS
Insulation Resistance	5000 megohms minimum
Operating Temperature	-65° C. to +150° C.
Shock	300 g.
Vibration	37 g.

MATERIALS AND FINISHES

Shell	Aluminum alloy
Contacts	Copper alloy, 50 microinches gold plated, stainless steel hood
Insulators	Liquid crystal polymer (LCP)
Retention Clips	Beryllium copper alloy
Grommet	Flourosilicone rubber
Hardware	300 series stainless steel

Dimensions in inches (millimeters) and are subject to change without notice.

© 2009 Glenair, Inc.
CAGE Code 06324
Printed in U.S.A.

Table 1 Contact Arrangements

Layout	Contact Quantity #23	#16	#12	Face View
A-5	5			
B-2P2		2		
B-9	9			
C-13	13			
D-15	15			
D-3P3		3		
D-7P2	5	2		
E-11P2	9	2		
E-19	19			
E-7P3	4	3		
F-15P2	13	2		
F-23	23			
F-5P5		5		
G-33	33			
H-10P4	6		4	
H-29P7	22	7		
H-36P2	34		2	
H-54P2	52	2		
H-5P5			5	
H-66	66			
J-17P4	13	4		
J-25P2	23	2		
J-33	33			
J-7P7		7		
K-27P4	23	4		
K-35P2	33	2		
K-43	43			
K-9P9		9		
L-6P6			6	

CROSS-SECTIONAL VIEW OF 790-025S

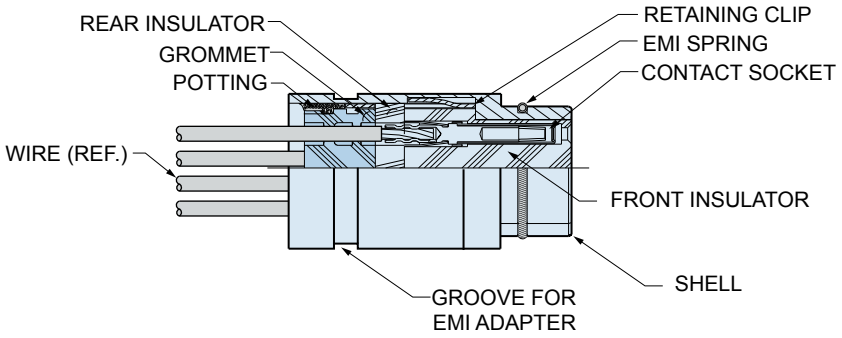

TABLE 2 HARDWARE OPTION

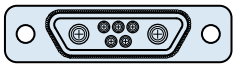

N
No Mating Hardware

Connector is supplied with thru-holes. Shell sizes H and L are .148" (3.76) diameter, other shell sizes are .092" (2.34) diameter. Accepts standard Micro-D M83513 hardware.

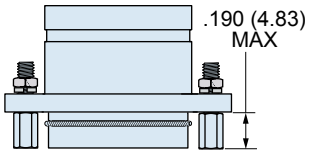

P
Jackposts

Connector is supplied with removable jackposts. Shell sizes H and L have #4-40 UNC thread, other sizes have #2-56 thread. Stainless steel. Conforms to M83513/05.

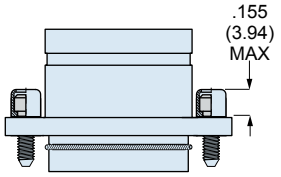

L
Hex Head Jackscrews

Connector is supplied with stainless steel non-removable low profile jackscrews. Shell sizes H and L have #4-40 UNC thread, other sizes have #2-56 thread.

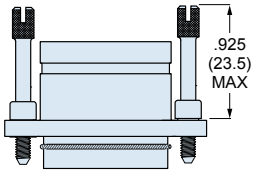

K
Extended Jackscrews

Connector is supplied with stainless steel slot head non-removable jackscrews. Shell sizes H and L have #4-40 UNC thread, other sizes have #2-56 thread.

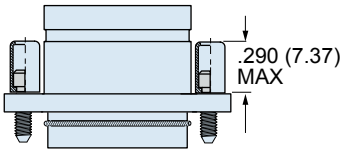

S
Hex Head Screwlocks

Connector is supplied with stainless steel non-removable low profile screwlocks. Shell sizes H and L have #4-40 UNC thread, other sizes have #2-56 thread. Screwlocks allow the connector to be mated before the screws are fastened.

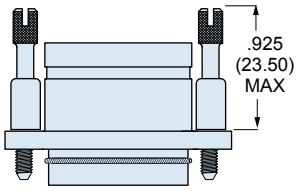

T
Extended Screwlocks

Connector is supplied with stainless steel non-removable slot head screwlocks. Shell sizes H and L have #4-40 UNC thread, other sizes have #2-56 thread. Screwlocks allow the connector to be mated before the screws are fastened.

D

Dimensions in inches (millimeters) and are subject to change without notice.

© 2009 Glenair, Inc.
CAGE Code 06324
Printed in U.S.A.

790-025S DIMENSIONS

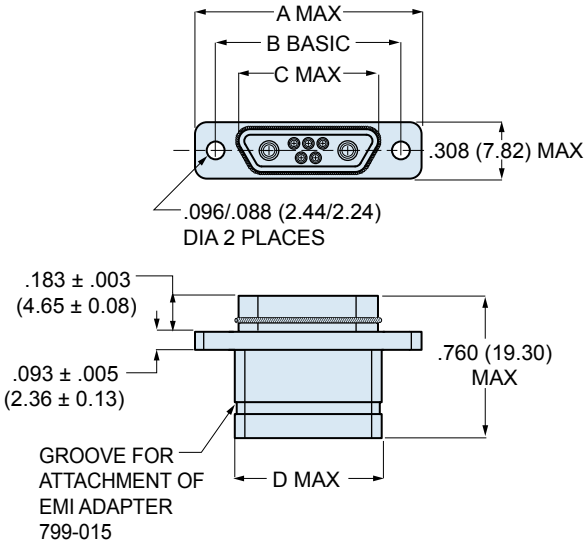

SHELL SIZES A, B, C, D, E, F, J, K

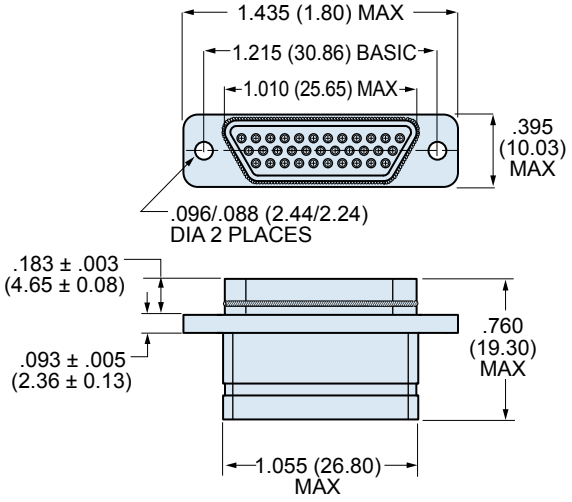

SHELL SIZE G

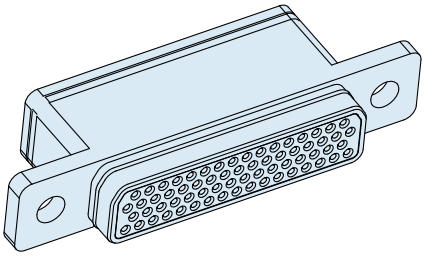

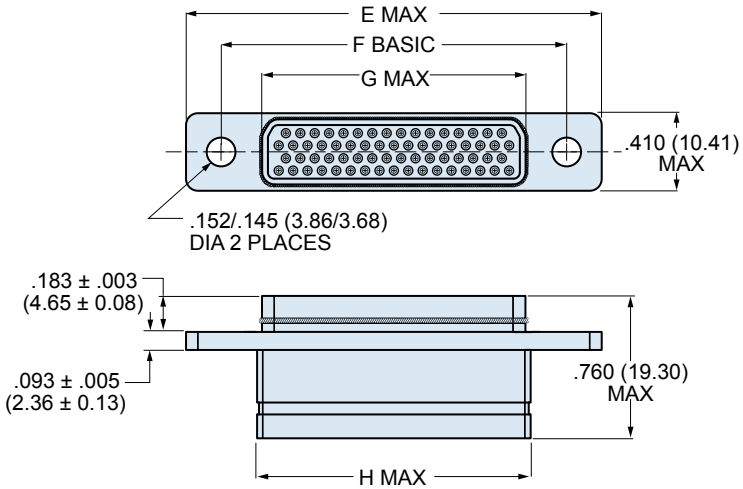

SHELL SIZE H AND L

790-025S DIMENSIONS																
Shell Size	A Max.		B Basic		C Max.		D Max.		E Max.		F Basic		G Max.		H Max.	
	In.	mm.	In .	mm.	In.	mm.	In.	mm.	In.	mm.	In.	mm.	In.	mm.	In.	mm.
A	.785	19.94	.565	14.35	.335	8.51	.390	9.91	—	—	—	—	—	—	—	—
B	.935	23.75	.715	18.16	.485	12.32	.540	13.72	—	—	—	—	—	—	—	—
C	1.085	27.65	.865	21.97	.635	16.13	.690	17.53	—	—	—	—	—	—	—	—
D	1.185	30.10	.965	24.51	.735	18.67	.790	20.07	—	—	—	—	—	—	—	—
E	1.335	33.91	1.115	28.32	.885	22.48	.940	23.88	—	—	—	—	—	—	—	—
F	1.485	37.72	1.265	32.13	1.035	26.29	1.090	27.69	—	—	—	—	—	—	—	—
H	—	—	—	—	—	—	—	—	2.175	55.25	1.800	45.72	1.385	35.18	1.440	36.58
J	1.845	46.86	1.615	41.02	1.390	35.61	1.450	36.83	—	—	—	—	—	—	—	—
K	2.240	56.90	2.015	51.18	1.795	45.59	1.840	46.74	—	—	—	—	—	—	—	—
L	—	—	—	—	—	—	—	—	2.420	61.47	2.036	51.71	1.623	41.22	1.675	42.55

Dimensions in inches (millimeters) and are subject to change without notice.

© 2009 Glenair, Inc.

CAGE Code 06324

Printed in U.S.A.

Unikeyic Electronics

Global Electronic Components Distributor

Click to view pricing, inventory, delivery, and lifecycle information:

Glenair:

380JS014NF1004A4 407HA044M1505L 440AS069NF1002-4BT 790-025SJ-7P7EM L M28840/10AE1S3 M83513/03-A04N 5PTC0002-DC M83513/01-DN MS25043-24DA M85049/95-27A-A 440HS030M1132-2 650-075Z1 M85049/52-1-14N MWDM2L-15S-6E5-18B 177-505-B-2-4 233-300NF07G176AN1 233-312NFG6-176AN1 450DA001B14 GMR7580-15S3BSU M85049/95-18A 450HB001M25 805-002-16M19-85SB ITS4106A20-15SNO 801-008-16M17-85PA 807-128-6-1Z1PA 177-505-A-2-4 445HT054NF0904 687-684XO17K 801-033-07NF9-19SA BACC10JS20A