74LVC2G241-Q100

Dual buffer/line driver; 3-state

Rev. 3 — 22 November 2018 Product data sheet

1. General description

The 74LVC2G241-Q100 is a dual non-inverting buffer/line driver with 3-state outputs. The 3-state outputs are controlled by the output enable inputs $1\overline{OE}$ and 2OE:

- A HIGH level at pin $1\overline{OE}$ causes output 1Y to assume a high-impedance OFF-state.
- A LOW level at pin 2OE causes output 2Y to assume a high-impedance OFF-state.

Schmitt trigger action at all inputs makes the circuit highly tolerant of slower input rise and fall times.

Inputs can be driven from either 3.3 V or 5 V devices. This feature allows the use of the 74LVC2G241-Q100 as a translator in a mixed 3.3 V and 5 V environment.

This device is fully specified for partial power-down applications using I_{OFF}. The I_{OFF} circuitry disables the output, preventing a damaging backflow current through the device when it is powered down.

This product has been qualified to the Automotive Electronics Council (AEC) standard Q100 (Grade 1) and is suitable for use in automotive applications.

2. Features and benefits

- Automotive product qualification in accordance with AEC-Q100 (Grade 1)
  - Specified from -40 °C to +85 °C and from -40 °C to +125 °C
- Wide supply voltage range from 1.65 V to 5.5 V
- 5 V tolerant input/output for interfacing with 5 V logic
- High noise immunity
- Complies with JEDEC standard:
-
  - JESD8-7 (1.65 V to 1.95 V)
  - JESD8-5 (2.3 V to 2.7 V)
  - JESD8-B/JESD36 (2.7 V to 3.6 V)
- ESD protection:
  - MIL-STD-883, method 3015 exceeds 2000 V
  - HBM JESD22-A114F exceeds 2000 V
  - MM JESD22-A115-A exceeds 200 V (C = 200 pF; R = 0 Ω)
- ±24 mA output drive (V_{CC} = 3.0 V)
- CMOS low power consumption
- Latch-up performance exceeds 250 mA
- Direct interface with TTL levels
- Inputs accept voltages up to 5 V

Downloaded from Arrow.com.

3. Ordering information

Table 1. Ordering information

Type number	Package			
	Temperature range	Name	Description	Version
74LVC2G241DP-Q100	-40 °C to +125 °C	TSSOP8	plastic thin shrink small outline package; 8 leads; body width 3 mm; lead length 0.5 mm	SOT505-2
74LVC2G241DC-Q100	-40 °C to +125 °C	VSSOP8	plastic very thin shrink small outline package; 8 leads; body width 2.3 mm	SOT765-1

4. Marking

Table 2. Marking codes

Type number	Marking code[1]
74LVC2G241DP-Q100	V241
74LVC2G241DC-Q100	V41

[1] The pin 1 indicator is located on the lower left corner of the device, below the marking code.

5. Functional diagram

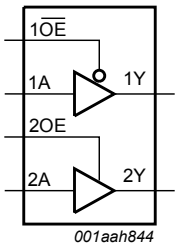

Fig. 1. Logic symbol

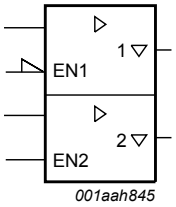

Fig. 2. IEC logic symbol

6. Pinning information

6.1. Pinning

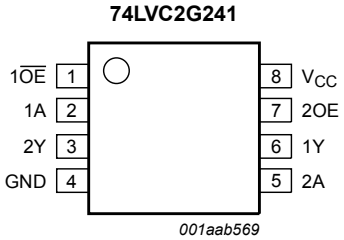

Fig. 3. Pin configuration SOT505-2 (TSSOP8) and SOT765-1 (VSSOP8)

All information provided in this document is subject to legal disclaimers.

© Nexperia B.V. 2018. All rights reserved

Downloaded from Arrow.com.

6.2. Pin description

Table 3. Pin description

Symbol	Pin	Description
$1\overline{OE}$	1	output enable input (active LOW)
1A, 2A	2, 5	data input
GND	4	ground (0 V)
1Y, 2Y	6, 3	data output
2OE	7	output enable input (active HIGH)
V_{CC}	8	supply voltage

7. Functional description

Table 4. Function table

H = HIGH voltage level; L = LOW voltage level; X = don't care; Z = high-impedance OFF-state.

Input				Output	
$1\overline{OE}$	1A	2OE	2A	1Y	2Y
L	L	H	L	L	L
L	H	H	H	H	H
H	X	L	X	Z	Z

8. Limiting values

Table 5. Limiting values

In accordance with the Absolute Maximum Rating System (IEC 60134). Voltages are referenced to GND (ground = 0 V).

Symbol	Parameter	Conditions	Min	Max	Unit
V_{CC}	supply voltage		-0.5	+6.5	V
I_{IK}	input clamping current	$V_I < 0$ V	-50	-	mA
V_I	input voltage	[1]	-0.5	+6.5	V
I_{OK}	output clamping current	$V_O > V_{CC}$ or $V_O < 0$ V	-	±50	mA
V_O	output voltage	enable mode [1]	-0.5	V_{CC} + 0.5	V
		disable mode [1]	-0.5	+6.5	V
		Power-down mode [1] [2]	-0.5	+6.5	V
I_O	output current	V_O = 0 V to V_{CC}	-	±50	mA
I_{CC}	supply current		-	100	mA
I_{GND}	ground current		-100	-	mA
T_{stg}	storage temperature		-65	+150	°C
P_{tot}	total power dissipation	T_{amb} = -40 °C to +125 °C [3]	-	300	mW

[1] The input and output voltage ratings may be exceeded if the input and output current ratings are observed.
[2] When V_{CC} = 0 V (Power-down mode), the output voltage can be 5.5 V in normal operation.
[3] For TSSOP8 packages: above 55 °C the value of P_{tot} derates linearly at 2.5 mW/K.
For VSSOP8 packages: above 110 °C the value of P_{tot} derates linearly at 8.0 mW/K.

All information provided in this document is subject to legal disclaimers.

© Nexperia B.V. 2018. All rights reserved

Downloaded from Arrow.com.

9. Recommended operating conditions

Table 6. Operating conditions

Symbol	Parameter	Conditions	Min	Max	Unit
V_{CC}	supply voltage		1.65	5.5	V
V_I	input voltage		0	5.5	V
V_O	output voltage	V_{CC} = 1.65 V to 5.5 V; enable mode	0	V_{CC}	V
		V_{CC} = 1.65 V to 5.5 V; disable mode	0	5.5	V
		V_{CC} = 0 V; Power-down mode	0	5.5	V
T_{amb}	ambient temperature		-40	+125	°C
$\Delta t/\Delta V$	input transition rise and fall rate	V_{CC} = 1.65 V to 2.7 V	-	20	ns/V
		V_{CC} = 2.7 V to 5.5 V	-	10	ns/V

10. Static characteristics

Table 7. Static characteristics

At recommended operating conditions; voltages are referenced to GND (ground = 0 V).

Symbol	Parameter	Conditions	Min	Typ[1]	Max	Unit
T_{amb} = -40 °C to +85 °C						
V_{IH}	HIGH-level input voltage	V_{CC} = 1.65 V to 1.95 V	0.65 × V_{CC}	-	-	V
		V_{CC} = 2.3 V to 2.7 V	1.7	-	-	V
		V_{CC} = 2.7 V to 3.6 V	2.0	-	-	V
		V_{CC} = 4.5 V to 5.5 V	0.7 × V_{CC}	-	-	V
V_{IL}	LOW-level input voltage	V_{CC} = 1.65 V to 1.95 V	-	-	0.35 × V_{CC}	V
		V_{CC} = 2.3 V to 2.7 V	-	-	0.7	V
		V_{CC} = 2.7 V to 3.6 V	-	-	0.8	V
		V_{CC} = 4.5 V to 5.5 V	-	-	0.3 × V_{CC}	V
V_{OL}	LOW-level output voltage	V_I = V_{IH} or V_{IL}				
		I_O = 100 µA; V_{CC} = 1.65 V to 5.5 V	-	-	0.1	V
		I_O = 4 mA; V_{CC} = 1.65 V	-	-	0.45	V
		I_O = 8 mA; V_{CC} = 2.3 V	-	-	0.3	V
		I_O = 12 mA; V_{CC} = 2.7 V	-	-	0.4	V
		I_O = 24 mA; V_{CC} = 3.0 V	-	-	0.55	V
		I_O = 32 mA; V_{CC} = 4.5 V	-	-	0.55	V
V_{OH}	HIGH-level output voltage	V_I = V_{IH} or V_{IL}				
		I_O = -100 µA; V_{CC} = 1.65 V to 5.5 V	V_{CC} - 0.1	-	-	V
		I_O = -4 mA; V_{CC} = 1.65 V	1.2	-	-	V
		I_O = -8 mA; V_{CC} = 2.3 V	1.9	-	-	V
		I_O = -12 mA; V_{CC} = 2.7 V	2.2	-	-	V
		I_O = -24 mA; V_{CC} = 3.0 V	2.3	-	-	V
		I_O = -32 mA; V_{CC} = 4.5 V	3.8	-	-	V
I_I	input leakage current	V_I = 5.5 V or GND; V_{CC} = 0 V to 5.5 V	-	±0.1	±1	µA
I_{OZ}	OFF-state output current	V_I = V_{IH} or V_{IL}; V_O = 5.5 V or GND; V_{CC} = 3.6 V	-	±0.1	±2	µA
I_{OFF}	power-off leakage current	V_I or V_O = 5.5 V; V_{CC} = 0 V	-	±0.1	±2	µA

All information provided in this document is subject to legal disclaimers.

© Nexperia B.V. 2018. All rights reserved

Downloaded from Arrow.com.

Symbol	Parameter	Conditions	Min	Typ[1]	Max	Unit
I_{CC}	supply current	V_I = 5.5 V or GND; I_O = 0 A; V_{CC} = 1.65 V to 5.5 V	-	0.1	4	µA
ΔI_{CC}	additional supply current	per pin; $V_I = V_{CC}$ - 0.6 V; I_O = 0 A; V_{CC} = 2.3 V to 5.5 V	-	5	500	µA
C_I	input capacitance		-	2	-	pF
T_{amb} = -40 °C to +125 °C						
V_{IH}	HIGH-level input voltage	V_{CC} = 1.65 V to 1.95 V	0.65 × V_{CC}	-	-	V
		V_{CC} = 2.3 V to 2.7 V	1.7	-	-	V
		V_{CC} = 2.7 V to 3.6 V	2.0	-	-	V
		V_{CC} = 4.5 V to 5.5 V	0.7 × V_{CC}	-	-	V
V_{IL}	LOW-level input voltage	V_{CC} = 1.65 V to 1.95 V	-	-	0.35 × V_{CC}	V
		V_{CC} = 2.3 V to 2.7 V	-	-	0.7	V
		V_{CC} = 2.7 V to 3.6 V	-	-	0.8	V
		V_{CC} = 4.5 V to 5.5 V	-	-	0.3 × V_{CC}	V
V_{OL}	LOW-level output voltage	$V_I = V_{IH}$ or V_{IL}				
		I_O = 100 µA; V_{CC} = 1.65 V to 5.5 V	-	-	0.1	V
		I_O = 4 mA; V_{CC} = 1.65 V	-	-	0.70	V
		I_O = 8 mA; V_{CC} = 2.3 V	-	-	0.45	V
		I_O = 12 mA; V_{CC} = 2.7 V	-	-	0.60	V
		I_O = 24 mA; V_{CC} = 3.0 V	-	-	0.80	V
		I_O = 32 mA; V_{CC} = 4.5 V	-	-	0.80	V
V_{OH}	HIGH-level output voltage	$V_I = V_{IH}$ or V_{IL}				
		I_O = -100 µA; V_{CC} = 1.65 V to 5.5 V	V_{CC} - 0.1	-	-	V
		I_O = -4 mA; V_{CC} = 1.65 V	0.95	-	-	V
		I_O = -8 mA; V_{CC} = 2.3 V	1.7	-	-	V
		I_O = -12 mA; V_{CC} = 2.7 V	1.9	-	-	V
		I_O = -24 mA; V_{CC} = 3.0 V	2.0	-	-	V
		I_O = -32 mA; V_{CC} = 4.5 V	3.4	-	-	V
I_I	input leakage current	V_I = 5.5 V or GND; V_{CC} = 0 V to 5.5 V	-	-	±1	µA
I_{OZ}	OFF-state output current	$V_I = V_{IH}$ or V_{IL}; V_O = 5.5 V or GND; V_{CC} = 3.6 V	-	-	±2	µA
I_{OFF}	power-off leakage current	V_I or V_O = 5.5 V; V_{CC} = 0 V	-	-	±2	µA
I_{CC}	supply current	V_I = 5.5 V or GND; I_O = 0 A; V_{CC} = 1.65 V to 5.5 V	-	-	4	µA
ΔI_{CC}	additional supply current	per pin; $V_I = V_{CC}$ - 0.6 V; I_O = 0 A; V_{CC} = 2.3 V to 5.5 V	-	-	500	µA

[1] Typical values are measured at V_{CC} = 3.3 V and T_{amb} = 25 °C.

All information provided in this document is subject to legal disclaimers.

© Nexperia B.V. 2018. All rights reserved

Downloaded from Arrow.com.

11. Dynamic characteristics

Table 8. Dynamic characteristics

Voltages are referenced to GND (ground = 0 V); for test circuit see Fig. 7.

Symbol	Parameter	Conditions	-40 °C to +85 °C			-40 °C to +125 °C		Unit
			Min	Typ[1]	Max	Min	Max	
t_{pd}	propagation delay	nA to nY; see Fig. 4 [2]						
		V_{CC} = 1.65 V to 1.95 V	1.0	4.5	8.8	1.0	11.0	ns
		V_{CC} = 2.3 V to 2.7 V	0.5	2.8	4.9	0.5	6.3	ns
		V_{CC} = 2.7 V	1.0	2.8	4.7	1.0	5.9	ns
		V_{CC} = 3.0 V to 3.6 V	0.5	2.6	4.3	0.5	5.4	ns
		V_{CC} = 4.5 V to 5.5 V	0.5	2.1	3.7	0.5	4.6	ns
t_{en}	enable time	$1\overline{OE}$ to 1Y; see Fig. 5 [2]						
		V_{CC} = 1.65 V to 1.95 V	1.5	5.2	9.9	1.5	12.4	ns
		V_{CC} = 2.3 V to 2.7 V	1.0	3.1	5.6	1.0	7.0	ns
		V_{CC} = 2.7 V	1.5	3.2	5.5	1.5	6.9	ns
		V_{CC} = 3.0 V to 3.6 V	0.5	2.7	4.7	0.5	5.9	ns
		V_{CC} = 4.5 V to 5.5 V	0.5	2.0	3.8	0.5	4.8	ns
		2OE to 2Y; see Fig. 6 [2]						
		V_{CC} = 1.65 V to 1.95 V	1.0	4.3	8.8	1.0	11.0	ns
		V_{CC} = 2.3 V to 2.7 V	1.0	2.7	4.7	1.0	5.9	ns
		V_{CC} = 2.7 V	1.0	2.7	4.6	1.0	5.8	ns
		V_{CC} = 3.0 V to 3.6 V	1.0	2.5	4.1	1.0	5.1	ns
		V_{CC} = 4.5 V to 5.5 V	0.5	1.9	3.3	0.5	4.1	ns
t_{dis}	disable time	$1\overline{OE}$ to 1Y; see Fig. 5 [2]						
		V_{CC} = 1.65 V to 1.95 V	1.0	3.2	11.6	1.0	14.1	ns
		V_{CC} = 2.3 V to 2.7 V	0.5	2.2	5.8	0.5	7.6	ns
		V_{CC} = 2.7 V	1.0	2.8	4.6	1.0	5.9	ns
		V_{CC} = 3.0 V to 3.6 V	1.0	2.6	4.4	1.0	5.7	ns
		V_{CC} = 4.5 V to 5.5 V	0.5	2.0	3.4	0.5	4.6	ns
		2OE to 2Y; see Fig. 6 [2]						
		V_{CC} = 1.65 V to 1.95 V	1.0	3.6	12.5	1.0	15.2	ns
		V_{CC} = 2.3 V to 2.7 V	0.5	2.0	5.2	0.5	6.9	ns
		V_{CC} = 2.7 V	1.5	3.2	4.9	1.5	6.3	ns
		V_{CC} = 3.0 V to 3.6 V	1.0	2.8	4.2	1.0	5.4	ns
		V_{CC} = 4.5 V to 5.5 V	0.5	2.0	3.3	0.5	4.4	ns
C_{PD}	power dissipation capacitance	per buffer; V_I = GND to V_{CC} [3]						
		output enabled	-	20	-	-	-	pF
		output disabled	-	5	-	-	-	pF

[1] Typical values are measured at nominal V_{CC} and at T_{amb} = 25 °C.

[2] t_{pd} is the same as t_{PLH} and t_{PHL}; t_{en} is the same as t_{PZH} and t_{PZL}; t_{dis} is the same as t_{PLZ} and t_{PHZ}.

[3] C_{PD} is used to determine the dynamic power dissipation (P_D in µW).

$P_D = C_{PD} \times V_{CC}^2 \times f_i \times N + \Sigma(C_L \times V_{CC}^2 \times f_o)$ where:

f_i = input frequency in MHz; f_o = output frequency in MHz; C_L = output load capacitance in pF;

V_{CC} = supply voltage in V; N = number of inputs switching; $\Sigma(C_L \times V_{CC}^2 \times f_o)$ = sum of outputs.

All information provided in this document is subject to legal disclaimers.

© Nexperia B.V. 2018. All rights reserved

Downloaded from Arrow.com.

11.1. Waveforms and test circuit

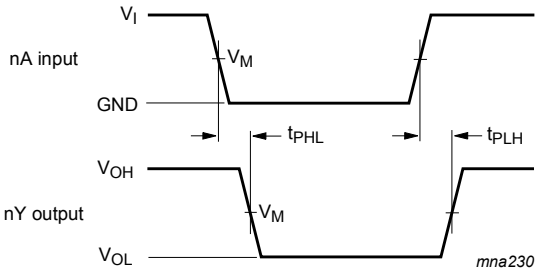

Measurement points are given in Table 9.

Logic levels: V_{OL} and V_{OH} are typical output voltage levels that occur with the output load.

Fig. 4. The data input (nA) to output (nY) propagation delays

Table 9. Measurement points

Supply voltage	Input	Output		
V_{CC}	V_M	V_M	V_X	V_Y
1.65 V to 1.95 V	0.5 x V_{CC}	0.5 x V_{CC}	V_{OL} + 0.15 V	V_{OH} - 0.15 V
2.3 V to 2.7 V	0.5 x V_{CC}	0.5 x V_{CC}	V_{OL} + 0.15 V	V_{OH} - 0.15 V
2.7 V	1.5 V	1.5 V	V_{OL} + 0.3 V	V_{OH} - 0.3 V
3.0 V to 3.6 V	1.5 V	1.5 V	V_{OL} + 0.3 V	V_{OH} - 0.3 V
4.5 V to 5.5 V	0.5 x V_{CC}	0.5 x V_{CC}	V_{OL} + 0.3 V	V_{OH} - 0.3 V

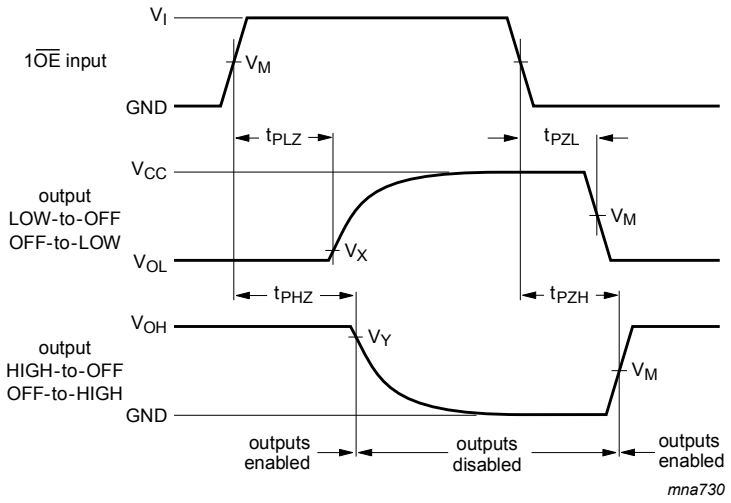

Measurement points are given in Table 9.

Logic levels: V_{OL} and V_{OH} are typical output voltage levels that occur with the output load.

Fig. 5. Enable and disable times for input $1\overline{OE}$

All information provided in this document is subject to legal disclaimers.

© Nexperia B.V. 2018. All rights reserved

Downloaded from Arrow.com.

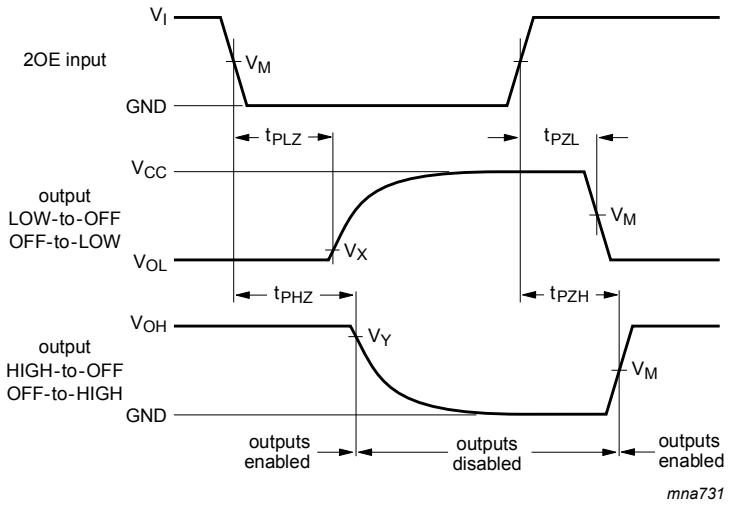

Measurement points are given in Table 9.

Logic levels: V_{OL} and V_{OH} are typical output voltage levels that occur with the output load.

Fig. 6. Enable and disable times for input 2OE

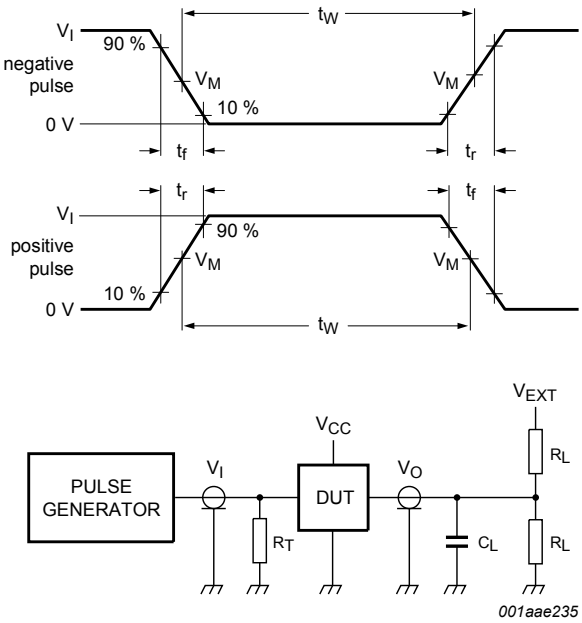

Test data is given in Table 10.

Definitions for test circuit:

R_T = Termination resistance should be equal to output impedance Z_o of the pulse generator.

C_L = Load capacitance including jig and probe capacitance; R_L = Load resistance.

Fig. 7. Test circuit for measuring switching times

Table 10. Test data

Supply voltage	Input	Load		V_{EXT}		
	V_I	C_L	R_L	t_{PLH}, t_{PHL}	t_{PZH}, t_{PHZ}	t_{PZL}, t_{PLZ}
1.65 V to 1.95 V	V_{CC}	30 pF	1 kΩ	open	GND	2 x V_{CC}
2.3 V to 2.7 V	V_{CC}	30 pF	500 Ω	open	GND	2 x V_{CC}
2.7 V	2.7 V	50 pF	500 Ω	open	GND	6 V
3.0 V to 3.6 V	2.7 V	50 pF	500 Ω	open	GND	6 V
4.5 V to 5.5 V	V_{CC}	50 pF	500 Ω	open	GND	2 x V_{CC}

All information provided in this document is subject to legal disclaimers.

© Nexperia B.V. 2018. All rights reserved

Downloaded from Arrow.com.

12. Package outline

TSSOP8: plastic thin shrink small outline package; 8 leads; body width 3 mm; lead length 0.5 mm SOT505-2

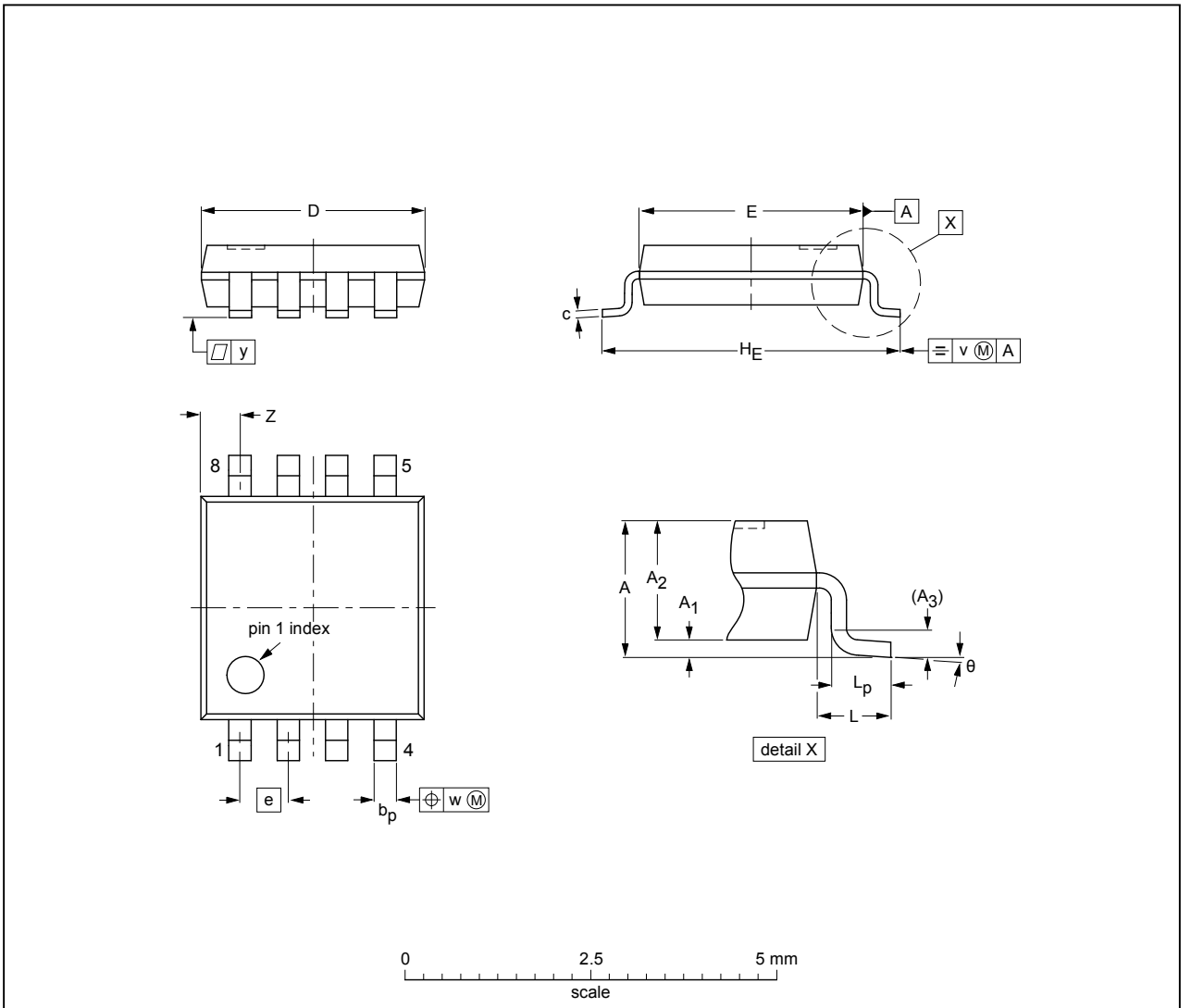

DIMENSIONS (mm are the original dimensions)

UNIT	A max.	A_1	A_2	A_3	b_p	c	$D^{(1)}$	$E^{(1)}$	e	H_E	L	L_p	v	w	y	$Z^{(1)}$	θ
mm	1.1	0.15 0.00	0.95 0.75	0.25	0.38 0.22	0.18 0.08	3.1 2.9	3.1 2.9	0.65	4.1 3.9	0.5	0.47 0.33	0.2	0.13	0.1	0.70 0.35	8° 0°

Note

1. Plastic or metal protrusions of 0.15 mm maximum per side are not included.

OUTLINE VERSION	REFERENCES				EUROPEAN PROJECTION	ISSUE DATE
	IEC	JEDEC	JEITA			
SOT505-2		- - -				02-01-16

Fig. 8. Package outline SOT505-2 (TSSOP8)

All information provided in this document is subject to legal disclaimers.

© Nexperia B.V. 2018. All rights reserved

Downloaded from Arrow.com.

VSSOP8: plastic very thin shrink small outline package; 8 leads; body width 2.3 mm **SOT765-1**

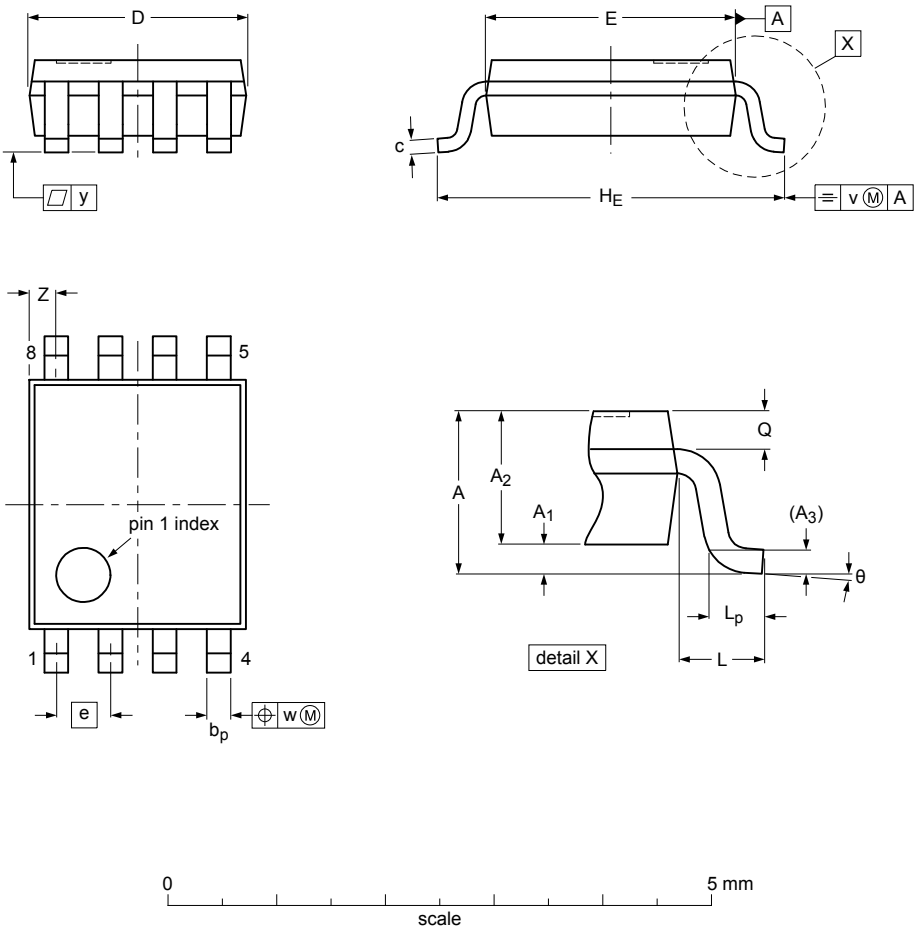

Dimensions (mm are the original dimensions)

Unit	A max.	A_1	A_2	A_3	b_p	c	$D^{(1)}$	$E^{(2)}$	e	H_E	L	L_p	Q	v	w	y	$Z^{(1)}$	θ
max		0.15	0.85		0.27	0.23	2.1	2.4		3.2		0.40	0.21				0.4	8°
mm nom	1			0.12					0.5		0.4			0.2	0.08	0.1		
min		0.00	0.60		0.17	0.08	1.9	2.2		3.0		0.15	0.19				0.1	0°

Note
1. Plastic or metal protrusions of 0.15 mm maximum per side are not included.
2. Plastic or metal protrusions of 0.25 mm maximum per side are not included.

sot765-1_po

Outline version	References				European projection	Issue date
	IEC	JEDEC	JEITA			
SOT765-1		MO-187				~~07-06-02~~ 16-05-31

Fig. 9. Package outline SOT765-1 (VSSOP8)

All information provided in this document is subject to legal disclaimers.

© Nexperia B.V. 2018. All rights reserved

Downloaded from Arrow.com.

13. Abbreviations

Table 11. Abbreviations

Acronym	Description
CMOS	Complementary Metal-Oxide Semiconductor
DUT	Device Under Test
ESD	ElectroStatic Discharge
HBM	Human Body Model
MIL	Military
MM	Machine Model
TTL	Transistor-Transistor Logic

14. Revision history

Table 12. Revision history

Document ID	Release date	Data sheet status	Change notice	Supersedes
74LVC2G241_Q100 v.3	20181122	Product data sheet	-	74LVC2G241_Q100 v.2
Modifications:	• The format of this data sheet has been redesigned to comply with the identity guidelines of Nexperia. • Legal texts have been adapted to the new company name where appropriate.			
74LVC2G241_Q100 v.2	20161214	Product data sheet	-	74LVC2G241_Q100 v.1
Modifications:	• Table 7: The maximum limits for leakage current and supply current have changed.			
74LVC2G241_Q100 v.1	20130404	Product data sheet	-	-

All information provided in this document is subject to legal disclaimers.

© Nexperia B.V. 2018. All rights reserved

Downloaded from Arrow.com.

15. Legal information

Data sheet status

Document status [1][2]	Product status [3]	Definition
Objective [short] data sheet	Development	This document contains data from the objective specification for product development.
Preliminary [short] data sheet	Qualification	This document contains data from the preliminary specification.
Product [short] data sheet	Production	This document contains the product specification.

[1] Please consult the most recently issued document before initiating or completing a design.
[2] The term 'short data sheet' is explained in section "Definitions".
[3] The product status of device(s) described in this document may have changed since this document was published and may differ in case of multiple devices. The latest product status information is available on the internet at https://www.nexperia.com.

Definitions

Draft — The document is a draft version only. The content is still under internal review and subject to formal approval, which may result in modifications or additions. Nexperia does not give any representations or warranties as to the accuracy or completeness of information included herein and shall have no liability for the consequences of use of such information.

Short data sheet — A short data sheet is an extract from a full data sheet with the same product type number(s) and title. A short data sheet is intended for quick reference only and should not be relied upon to contain detailed and full information. For detailed and full information see the relevant full data sheet, which is available on request via the local Nexperia sales office. In case of any inconsistency or conflict with the short data sheet, the full data sheet shall prevail.

Product specification — The information and data provided in a Product data sheet shall define the specification of the product as agreed between Nexperia and its customer, unless Nexperia and customer have explicitly agreed otherwise in writing. In no event however, shall an agreement be valid in which the Nexperia product is deemed to offer functions and qualities beyond those described in the Product data sheet.

Disclaimers

Limited warranty and liability — Information in this document is believed to be accurate and reliable. However, Nexperia does not give any representations or warranties, expressed or implied, as to the accuracy or completeness of such information and shall have no liability for the consequences of use of such information. Nexperia takes no responsibility for the content in this document if provided by an information source outside of Nexperia.

In no event shall Nexperia be liable for any indirect, incidental, punitive, special or consequential damages (including - without limitation - lost profits, lost savings, business interruption, costs related to the removal or replacement of any products or rework charges) whether or not such damages are based on tort (including negligence), warranty, breach of contract or any other legal theory.

Notwithstanding any damages that customer might incur for any reason whatsoever, Nexperia's aggregate and cumulative liability towards customer for the products described herein shall be limited in accordance with the Terms and conditions of commercial sale of Nexperia.

Right to make changes — Nexperia reserves the right to make changes to information published in this document, including without limitation specifications and product descriptions, at any time and without notice. This document supersedes and replaces all information supplied prior to the publication hereof.

Suitability for use in automotive applications — This Nexperia product has been qualified for use in automotive applications. Unless otherwise agreed in writing, the product is not designed, authorized or warranted to be suitable for use in life support, life-critical or safety-critical systems or equipment, nor in applications where failure or malfunction of an Nexperia product can reasonably be expected to result in personal injury, death or severe property or environmental damage. Nexperia and its suppliers accept no liability for inclusion and/or use of Nexperia products in such equipment or applications and therefore such inclusion and/or use is at the customer's own risk.

Quick reference data — The Quick reference data is an extract of the product data given in the Limiting values and Characteristics sections of this document, and as such is not complete, exhaustive or legally binding.

Applications — Applications that are described herein for any of these products are for illustrative purposes only. Nexperia makes no representation or warranty that such applications will be suitable for the specified use without further testing or modification.

Customers are responsible for the design and operation of their applications and products using Nexperia products, and Nexperia accepts no liability for any assistance with applications or customer product design. It is customer's sole responsibility to determine whether the Nexperia product is suitable and fit for the customer's applications and products planned, as well as for the planned application and use of customer's third party customer(s). Customers should provide appropriate design and operating safeguards to minimize the risks associated with their applications and products.

Nexperia does not accept any liability related to any default, damage, costs or problem which is based on any weakness or default in the customer's applications or products, or the application or use by customer's third party customer(s). Customer is responsible for doing all necessary testing for the customer's applications and products using Nexperia products in order to avoid a default of the applications and the products or of the application or use by customer's third party customer(s). Nexperia does not accept any liability in this respect.

Limiting values — Stress above one or more limiting values (as defined in the Absolute Maximum Ratings System of IEC 60134) will cause permanent damage to the device. Limiting values are stress ratings only and (proper) operation of the device at these or any other conditions above those given in the Recommended operating conditions section (if present) or the Characteristics sections of this document is not warranted. Constant or repeated exposure to limiting values will permanently and irreversibly affect the quality and reliability of the device.

Terms and conditions of commercial sale — Nexperia products are sold subject to the general terms and conditions of commercial sale, as published at http://www.nexperia.com/profile/terms, unless otherwise agreed in a valid written individual agreement. In case an individual agreement is concluded only the terms and conditions of the respective agreement shall apply. Nexperia hereby expressly objects to applying the customer's general terms and conditions with regard to the purchase of Nexperia products by customer.

No offer to sell or license — Nothing in this document may be interpreted or construed as an offer to sell products that is open for acceptance or the grant, conveyance or implication of any license under any copyrights, patents or other industrial or intellectual property rights.

Export control — This document as well as the item(s) described herein may be subject to export control regulations. Export might require a prior authorization from competent authorities.

Translations — A non-English (translated) version of a document is for reference only. The English version shall prevail in case of any discrepancy between the translated and English versions.

Trademarks

Notice: All referenced brands, product names, service names and trademarks are the property of their respective owners.

All information provided in this document is subject to legal disclaimers.

© Nexperia B.V. 2018. All rights reserved

Downloaded from Arrow.com.

Contents

1. General description....1
2. Features and benefits....1
3. Ordering information....2
4. Marking....2
5. Functional diagram....2
6. Pinning information....2
6.1. Pinning....2
6.2. Pin description....3
7. Functional description....3
8. Limiting values....3
9. Recommended operating conditions....4
10. Static characteristics....4
11. Dynamic characteristics....6
11.1. Waveforms and test circuit....7
12. Package outline....9
13. Abbreviations....11
14. Revision history....11
15. Legal information....12

© **Nexperia B.V. 2018. All rights reserved**

For more information, please visit: http://www.nexperia.com
For sales office addresses, please send an email to: salesaddresses@nexperia.com
Date of release: 22 November 2018

Downloaded from Arrow.com.