

# Heyco® Fan Guards

- Good corrosion resistance, easy to clean.
- Screw mount.
- Material: Steel wire Electroplated; Nickel Chrome finish.

| NO. Rings | PART NO. | DESCRIPTION | PART DIMENSIONS A in. | A mm. | B in. | B mm. | C in. | C mm. | D in. | D mm. | STYLE |
|---|---|---|---|---|---|---|---|---|---|---|---|
| 2 | 0975 | FG 25 | .94 | 24,0 | 1.24 | 31,4 | .12 | 2,2 | .14 | 3,5 | 1 |
| | 0976 | FG 40 | 1.15 | 29,1 | 1.26 | 32,0 | .19 | 4,8 | .16 | 4,0 | 2 |
| 3 | 0977 | FG 50 | 1.62 | 41,1 | 1.57 | 40,0 | .19 | 4,8 | .18 | 4,6 | |
| 4 | 0978 | FG 60 | 2.09 | 53,2 | 1.97 | 50,0 | .17 | 4,4 | | | |
| 5 | 0979 | FG 80 | 2.99 | 76,0 | 2.82 | 71,5 | .22 | 5,5 | .19 | 4,8 | |
| 6 | 0980 | FG 92 | 3.54 | 90,0 | 3.25 | 82,5 | .22 | 5,5 | | | |
| 8 | 0981 | FG 120 | 4.55 | 115,6 | 4.13 | 105,0 | .22 | 5,5 | .18 | 4,6 | |
| 10 | 0982 | FG 150 | 6.08 | 154,4 | 6.38 | 162,1 | .26 | 6,5 | .19 | 4,8 | 3 |

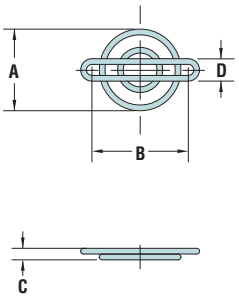

Style 1

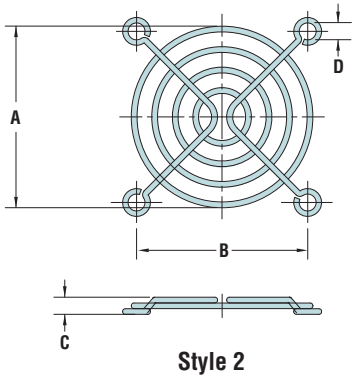

Style 2

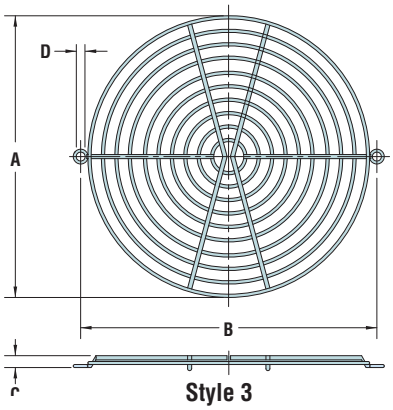

Style 3



# Heyco® Fan Guard Rivets

- Permanently mount fan to chassis or finger guards to fan.
- Provide tamper resistant application.
- Prongs expand to hold securely as pin is driven.
- Single-operation front mounting saves time and money.
- Low profile head.
- Installed by hand or with installation tool.
- Part Description Key: PR/DR XXX-YYY where XXX = Mounting Hole Diameter (inches) and YYY = minimum Panel Thickness (inches).

| WILL FIT THESE PANELS MOUNTING HOLE DIA. in. | mm. | PANEL THICKNESS Min. in. | mm. | Max. in. | mm. | PART NO. Black | DESCRIPTION | PART DIMENSIONS A Length in. | mm. | B Head Height in. | mm. | C Head Diameter in. | mm. | EXTRACTION FORCE Lbs | Kg |
|---|---|---|---|---|---|---|---|---|---|---|---|---|---|---|---|
| **Snap Style** | | | | | | | | | | | | | | | |
| .124 | 3,1 | .81 | 20,5 | .85 | 21,5 | **9326** | PR 124-807 | .91 | 23,0 | .06 | 1,6 | .25 | 6,4 | 17.6 | 8 |
| **Push Style** | | | | | | | | | | | | | | | |
| .137 | 3,5 | .81 | 20,5 | .85 | 21,5 | **9327** | DR 137-807 | .91 | 23,0 | .03 | 0,8 | .20 | 5,0 | 17.6 | 8 |

UL94V-2 Nylon 6 - both Rivets

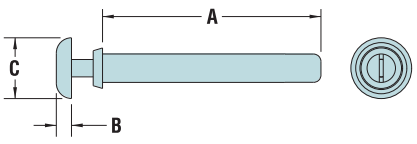

Snap Style

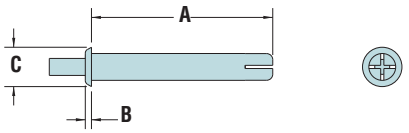

Push Style

| | Rivets |
|---|---|
| Material | Nylon 6/6 |
| Flammability Rating | 94V-2 |
| Temperature Range | -.4°F (-18°C) to 185°F (85°C) |

Quick Specs



1-800-526-4182 • 732-286-1800 (NJ) • FAX: 732-244-8843 • www.heyco.com

# Unikeyic Electronics

Global Electronic Components Distributor

Click to view pricing, inventory, delivery, and lifecycle information:

## HEYCO:

3464 1282 1214 2850N 3547B 8390 2298 3547V M3200GAJ M5240 2017 2113 3547 3582VB M3243 M3458 3259 M3216GN 2693 9147 M4514 10360 1207 1260 1858 3325 M4518 3834 C2022 G1094