IEC Contactors & Starters

Contents

Description	*Page*
***XT* IEC Power Control**	
Relays and Timers	34-2
Miniature Controls	34-15
Contactors and Starters	34-30
Overload Relays — XTOB, XTOT	34-104
Overload Relays — C396	34-113
Manual Motor Protectors	34-121
Combination Motor Controllers	34-157
Contactors and Starters — Enclosed Control	34-174
Combination Motor Controllers — Enclosed Control	34-202
Reference Data	34-210
***IT.* Electro-Mechanical**	34-228
Contactors — Full Voltage, Non-reversing and Reversing	34-230
Starters — Full Voltage, Non-reversing and Reversing	34-233
For Replacement Only	
Miniature Controls	34-256
Contactors — Non-reversing and Reversing	34-258
Freedom	34-261
Contactors — Non-reversing and Reversing	34-262
Starters — Fixed Heater	34-266
Relays — Fixed Heater Overload	34-269
Starters — Interchangeable Heater	34-270
Relays — Interchangeable Heater Overload	34-273
MMPs & Manual and Combination Motor Controllers	34-290
Type A302 Manual Motor Protectors	34-290
Types A307, A308, A309 Manual Motor Protectors	34-294
Types AM/AE317/357, AE318/358, AE319/359 Freedom IEC Combination Motor Controllers	34-300



IEC Contactors and Starters

Contents

Description	*Page*
Catalog Number Selection	**34-3**
Product Selection	**34-4**
Accessories	**34-5**
Technical Data and Specifications	**34-10**
Dimensions	**34-13**
Reference Data	**34-210**





Product Description

Eaton's new line of ***XT*** Relays and Timers includes mini and standard frame control relays and auxiliary contacts, mini electronic on-delay and multi-function timers and an electronic star-delta (wye-delta) timer for use in star-delta (wye-delta) combinations. Because ***XT*** meets UL, CSA, CCC and CE standards, it is the perfect product solution for IEC applications all over the world. The compact, space saving, and easy to install ***XT*** line of IEC contactors and starters is the efficient and effective solution for customer applications.

Features

- For use with Mini and Standard frame size contactors and starters
- Control Relays
  - AC Control from 12V to 550V 50 Hz, 600V 60 Hz
  - DC Control from 12V to 220V
- On-Delay and Multi-Function Timers
  - 24 – 240V AC/DC Control
- Available with screw or spring cage terminals
- 4-Pole Configurations
- IP20 finger and back-of-hand proof
- Large ambient temperature range: -25° to 50°C [-13° to 122°F]
- The XTRE Control Relays have positively driven contacts between the relay and the auxiliary contact modules as well as within the auxiliary contact modules

Standards and Certifications

- IEC EN 60947
- CE Approved
- UL
- CSA
- CCC
- ATEX

Instructional Leaflets

Pub51219	Inside of Packaging XTRM Mini Control Relays
Pub51210	Inside of Packaging 7-15A XTCE Contactors and XTRE Control Relays
Pub51244	XTTR Electronic Star-Delta (Wye-Delta) Timer
Pub51245	XTMT Mini Electronic On-Delay and Multi-Function Timers

Catalog Number Selection

Table 34-1. *XT* — Relay Catalog Numbering System

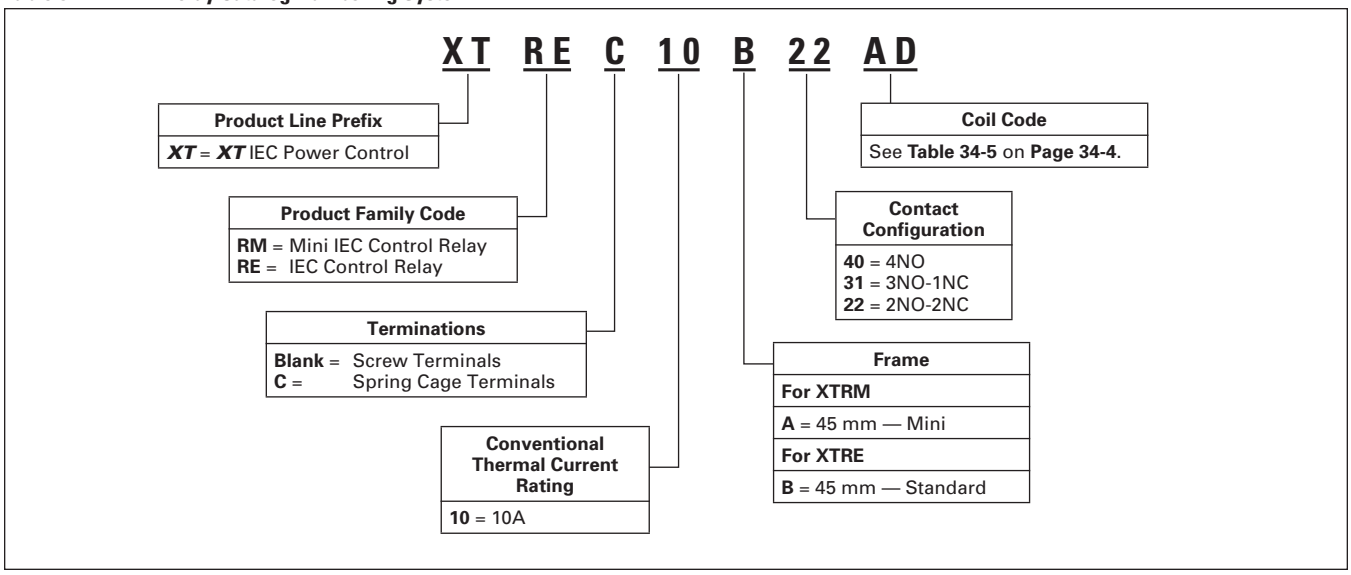

Table 34-2. *XT* — Timers Catalog Numbering System

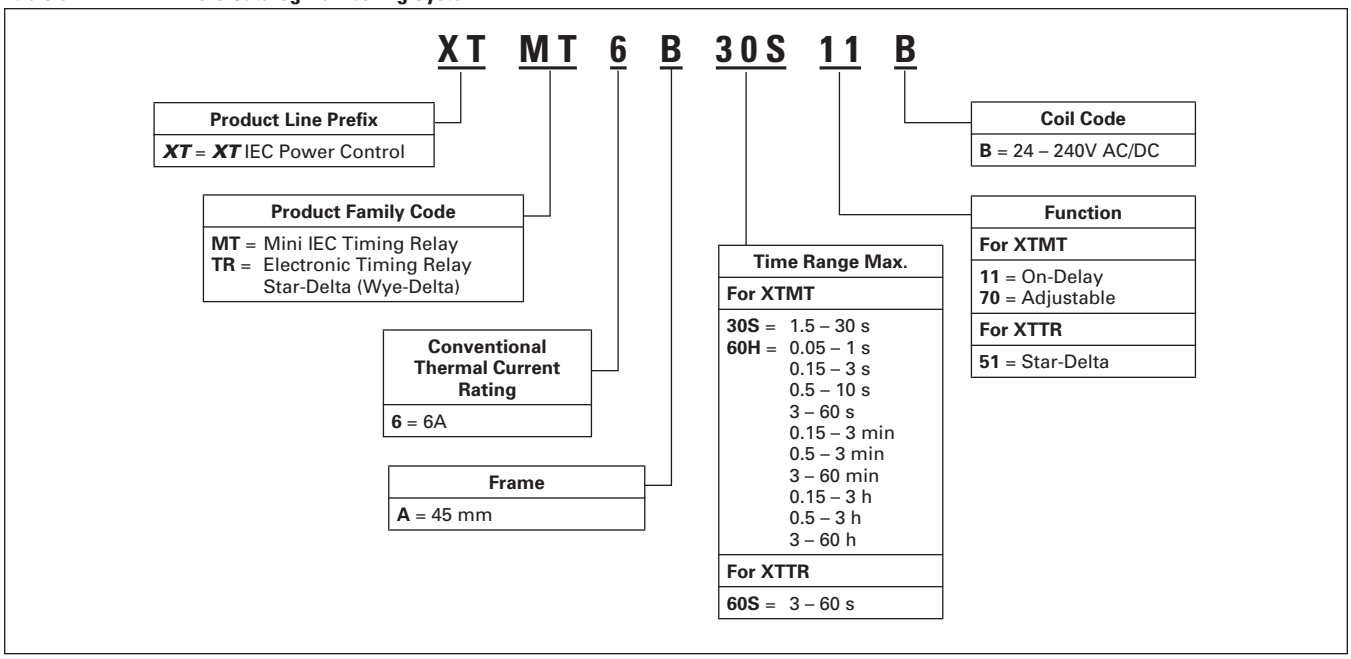

Product Selection



Mini Control Relays

Table 34-3. Mini Control Relays

Conventional Thermal Current I_{th} (A)	Contact Configuration	Rated Operational Current AC-15 I_e (A)			Circuit Symbol	Screw Terminals	Spring Cage Terminals	Price U.S. $	
		220 – 240V	380 – 415V	500V		Catalog Number ①	Catalog Number ①	AC Coil	DC Coil
10	4NO	6	3	1.5	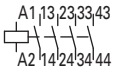	XTRM10A40_	XTRMC10A40_		
10	3NO-1NC	6	3	1.5	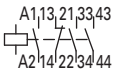	XTRM10A31_	XTRMC10A31_		
10	2NO-2NC	6	3	1.5	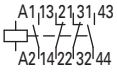	XTRM10A22_	XTRMC10A22_		

① Underscore (_) indicates magnet coil suffix required. See **Table 34-5**.

Control Relays



Table 34-4. Control Relays

Conventional Thermal Current Open at 60°C I_{th} (A)	Contact Configuration	Rated Operational Current AC-15 I_e (A)			Circuit Symbol	Screw Terminals	Spring Cage Terminals	Price U.S. $	
		220 – 240V	380 – 415V	500V		Catalog Number ②	Catalog Number ②	AC Coil	DC Coil
16	4NO	6	4	1.5	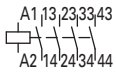	XTRE10B40_	XTREC10B40_		
16	3NO-1NC	6	4	1.5	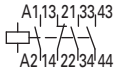	XTRE10B31_	XTREC10B31_		
16	2NO-2NC	6	4	1.5	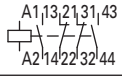	XTRE10B22_ ③	XTREC10B22_ ③		

② Underscore (_) indicates magnet coil suffix required. See **Table 34-5**.
③ DC operated control relays XTRE(C)10B22_ can only be combined with 2-pole auxiliary contacts.

Table 34-5. Coil Voltage Suffix

Coil Voltage	Suffix Code
110V 50 Hz, 120V 60 Hz	**A**
220V 50 Hz, 240V 60 Hz	**B**
230V 50 Hz	**F**
24V 50/60 Hz	**T**
24V DC	**TD**
415V 50 Hz, 480V 60 Hz	**C**
550V 50 Hz, 600V 60 Hz	**D**

Coil Voltage	Suffix Code
208V 60 Hz	**E**
190V 50 Hz, 220V 60 Hz	**G**
240V 50 Hz, 277V 60 Hz	**H**
380V 50 Hz, 440V 60 Hz	**L**
400V 50 Hz	**N**
380V 60 Hz	**P**
12V 50/60 Hz	**R**

Coil Voltage	Suffix Code
24V 50 Hz	**U**
42V 50 Hz, 48V 60 Hz	**W**
48V 50 Hz	**Y**
120V DC	**AD**
220V DC	**BD**
12V DC	**RD**
48V DC	**WD**

Notes:
- Orders must be placed in multiples of the package quantity listed.
- DC operated control relays have a built-in suppressor circuit.
- Contact terminal numbers to EN50011.
- Coil terminal numbers to EN50005.

Accessories ..... **Page 34-5**
Dimensions ..... **Page 34-13**
Discount Symbol **1CD7**

Accessories



Auxiliary Contacts

Table 34-6. Front Mount Auxiliary Contacts for Use with XTRM Mini Control Relays

Conventional thermal current, I_{th} Open (A)	Rated Operational Current AC-15 I_e (A)			Contact Configuration	Contact Sequence	Package Qty.	Screw Terminals	Spring Cage Terminals	Price U.S. $ ①
	220V 230V 240V	380V 400V 415V	500V				Catalog Number	Catalog Number	
10	4	2	1.5	2NC		5	**XTMCXFA02**	—	
10	4	2	1.5	1NO-1NC	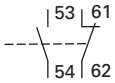	5	**XTMCXFA11**	**XTMCXFAC11**	
10	4	2	1.5	2NO		5	**XTMCXFA20**	—	
10	4	2	1.5	$1NO_E$-$1NC_L$	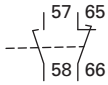	5	**XTMCXFAL11** ②	—	
10	4	2	1.5	4NC	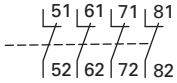	5	**XTMCXFA04**	**XTMCXFAC04**	
10	4	2	1.5	1NO-3NC	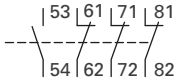	5	**XTMCXFA13**	**XTMCXFAC13**	
10	4	2	1.5	2NO-2NC	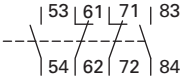	5	**XTMCXFA22**	**XTMCXFAC22**	
10	4	2	1.5	3NO-1NC	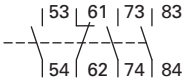	5	**XTMCXFA31**	**XTMCXFAC31**	
10	4	2	1.5	4NO	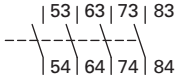	5	**XTMCXFA40**	**XTMCXFAC40**	
10	4	2	1.5	1NO-1NC $1NO_E$-$1NC_L$	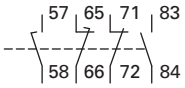	5	**XTMCXFAL22** ②	**XTMCXFCLC22** ②	

① Orders must be placed in multiples of package quantity listed.
② 1 early-make contact (NO_E), 1 late-break contact (NC_L).

Discount Symbol **1CD7**

34

Table 34-7. Front Mount Auxiliary Contacts for Use with XTRE Control Relays ③

	Conventional Thermal Current, I_{th} (A), Open at 60°C	Poles	Rated Operational Current AC-15 I_e (A)			Contact Configuration	Circuit Symbol	Pkg. Qty.	Screw Terminals	Spring Cage Terminals	Price U.S. $ ①
			220V 230V 240V	380V 400V 415V	500V				Catalog Number	Catalog Number	
	16	2	6	3	1.5	2NO		5	**XTCEXFAC20**	**XTCEXFACC20**	
	16	2	6	3	1.5	1NO-1NC		5	**XTCEXFAC11**	**XTCEXFACC11**	
	16	2	6	3	1.5	2NC		5	**XTCEXFAC02**	**XTCEXFACC02**	
	16	2	6	3	1.5	$1NO_E$-$1NC_L$		5	**XTCEXFALC11** ②	**XTCEXFALCC11** ②	
	16	4	6	3	1.5	4NO		5	**XTCEXFAC40**	**XTCEXFACC40**	
	16	4	6	3	1.5	3NO-1NC		5	**XTCEXFAC31**	**XTCEXFACC31**	
	16	4	6	3	1.5	2NO-2NC		5	**XTCEXFAC22**	**XTCEXFACC22**	
	16	4	6	3	1.5	1NO-3NC		5	**XTCEXFAC13**	**XTCEXFACC13**	
	16	4	6	3	1.5	4NC		5	**XTCEXFAC04**	**XTCEXFACC04**	
	16	4	6	3	1.5	1NO-1NC $1NO_E$-$1NC_L$		5	**XTCEXFCLC22** ②	**XTCEXFCLCC22** ②	

① Orders must be placed in multiples of package quantity listed.
② 1 early-make contact (NO_E), 1 late-break contact (NC_L).
③ Interlocked opposing contacts, to IEC/EN 60947-5-1 Annex L (positively driven), within the auxiliary contact modules (not NO_E and NC_L contacts) and between the auxiliary contacts and built-in contacts of the XTRE control relays.

Suppressors

For AC operated contactors 50 – 60 Hz. On DC operated contactor relays and on XTRE10B the suppressor circuit is built-in. Note drop-out relay.

Varistor Suppressor ④⑤



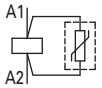

Contact Sequence

Table 34-8. Varistor Suppressor for XTRE

Voltage	For Use with…	Pkg. Qty.	Catalog Number	Price U.S. $ ⑥
24 – 48	XTCE007B – XTCE015B, XTCF020B, XTRE(C)10B	10	**XTCEXVSBW**	
48 – 130		10	**XTCEXVSBA**	
130 – 240		10	**XTCEXVSBB**	
240 – 500		10	**XTCEXVSBC**	

④ Note drop-out delay.
⑤ For AC operated contactors, 50/60 Hz. DC operated contactors have an integrated suppressor.
⑥ Orders must be placed in multiples of package quantity listed.





Table 34-9. Varistor Suppressor for XTRM ⑦

Voltage	For Use with…	Circuit Symbol	Package Qty.	Catalog Number	Price U.S. $ ⑧
24 – 48	XTRM6A…, XTRM9A…	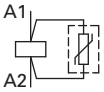	10	**XTMCXVSW**	
48 – 130	XTRM6A…, XTRM9A…		10	**XTMCXVSA**	
110 – 250	XTRM6A…, XTRM9A…		10	**XTMCXVSB**	
380 – 415	XTRM6A…, XTRM9A…		10	**XTMCXVSN**	
24 – 48	XTRMC6A…, XTRMC9A…		10	**XTMCXVSCW**	
48 – 130	XTRMC6A…, XTRMC9A…		10	**XTMCXVSCA**	
110 – 250	XTRMC6A…, XTRMC9A…		10	**XTMCXVSCB**	

⑦ For AC operated contactors, 50/60 Hz. DC operated contactors have integrated varistor suppressors.
⑧ Orders must be placed in multiples of package quantity listed.

Discount Symbol **1CD7**

Varistor Suppressor with Integrated LED ①②



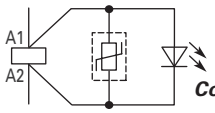

Contact Sequence

Table 34-10. Varistor Suppressor for XTRE

Voltage	For Use with…	Pkg. Qty.	Catalog Number	Price U.S. $ ③
24 – 48 130 – 240	XTRE(C)10B	10 10	**XTCEXVSLBW** **XTCEXVSLBB**	

① Note drop-out delay.
② For AC operated contactors, 50/60 Hz. DC operated contactors have an integrated suppressor.
③ Orders must be placed in multiples of package quantity listed.

RC Suppressor ④⑤



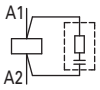

Contact Sequence

Table 34-11. RC Suppressor for XTRE

Voltage	For Use with…	Pkg. Qty.	Catalog Number	Price U.S. $ ⑥
24 – 48 48 – 130 110 – 240 240 – 500	XTRE(C)10B	10 10 10 10	**XTCEXRSBW** **XTCEXRSBA** **XTCEXRSBB** **XTCEXRSBC**	

④ Note drop-out delay.
⑤ For AC operated contactors, 50/60 Hz. DC operated contactors have an integrated suppressor.
⑥ Orders must be placed in multiples of package quantity listed.





Table 34-12. RC Suppressor for XTRM ⑦

Voltage	For Use with…	Circuit Symbol	Package Qty.	Catalog Number	Price U.S. $ ⑧
24 – 48	XTRM6A…, XTRM9A…	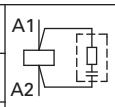	10	**XTMCXRSW**	
48 – 130	XTRM6A…, XTRM9A…		10	**XTMCXRSA**	
110 – 250	XTRM6A…, XTRM9A…		10	**XTMCXRSB**	
24 – 48	XTRMC6A…, XTRMC9A…		10	**XTMCXRSCW**	
48 – 130	XTRMC6A…, XTRMC9A…		10	**XTMCXRSCA**	
110 – 250	XTRMC6A…, XTRMC9A…		10	**XTMCXRSCB**	

⑦ For AC operated contactors, 50/60 Hz. Note drop-out delay.
⑧ Orders must be placed in multiples of package quantity listed.

Free-Wheel Diode Suppressor



In addition to the built-in suppressor circuit for DC actuated contactors. Prevents negative breaking voltage when contactors are used in combination with a safety PLC.

Table 34-13. Free-Wheel Diode Suppressor for XTRE

Voltage	For Use with…	Pkg. Qty.	Catalog Number	Price U.S. $ ⑨
12 – 250 DC	XTRE10B	10	**XTCEXDSB**	

⑨ Orders must be placed in multiples of package quantity listed.

Voltage Indicator



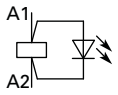

Contact Sequence

Table 34-14. Voltage Indicator for XTRE

Voltage	For Use with…	Pkg. Qty.	Catalog Number	Price U.S. $ ⑩
24 – 48 110 – 120 110 – 250	XTRE(C)10B	10 10 10	**XTCEXVIBW** **XTCEXVIBA** **XTCEXVIBB**	

⑩ Orders must be placed in multiples of package quantity listed.

Discount Symbol **1CD7**

34

Connector ①

Table 34-15. Connector

	For Use with…	Pkg. Qty.	Catalog Number	Price U.S. $ ②
	XTRE(C)10B	50	**XTCEXCNC**	
	XTRM10A	50	**XTMCXCN**	

① For mechanically arranging contactors in combinations. Distance between contactors is 0 mm.
② Orders must be placed in multiples of package quantity listed.

Mechanical Interlock ③

Table 34-16. Mechanical Interlock

	For Use with…	Pkg. Qty.	Catalog Number	Price U.S. $ ④
	XTRE10B...	5	**XTCEXMLB**	
	XTRM10A...	5	**XTMCXML**	

③ For two contactors with AC or DC operated magnet system which are horizontally or vertically mounted. For B frame, mechanical lifespan is 2.5×10^6 operations and the distance between contactors is 0 mm.
④ Orders must be placed in multiples of package quantity listed.

Electronic Timer Modules



Front (Top) mounted timer modules for use with XTRE10B control relays. Can not be combined with top mount auxiliary contacts, XTCEXF_C_.

Table 34-17. Electronic Timer Modules for XTRE

Voltage	Contact Sequence	Timing Range	For Use with…	Pkg. Qty.	Catalog Number	Price U.S. $
On-Delayed						
24V AC/DC	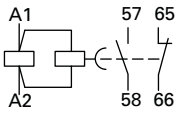	0.05 – 1 s 0.5 – 10 s 15 – 100 s	XTRE10B_	1	**XTCEXTEEC11T**	
100 – 130V AC					**XTCEXTEEC11A**	
200 – 240V AC					**XTCEXTEEC11B**	
Off-Delayed						
24V AC/DC	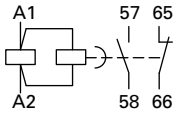	0.05 – 1 s	XTRE10B_	1	**XTCEXTED1C11T**	
100 – 130V AC					**XTCEXTED1C11A**	
200 – 240V AC					**XTCEXTED1C11B**	
24V AC/DC		0.5 – 10 s	XTRE10B_	1	**XTCEXTED10C11T**	
100 – 130V AC					**XTCEXTED10C11A**	
200 – 240V AC					**XTCEXTED10C11B**	
24V AC/DC		5 – 100 s	XTRE10B_	1	**XTCEXTED100C11T**	
100 – 130V AC					**XTCEXTED100C11A**	
200 – 240V AC					**XTCEXTED100C11B**	
Star-Delta						
24V AC/DC	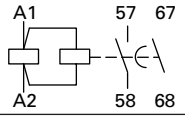	1 – 30 s	XTRE10B_	1	**XTCEXTEYC20T**	
100 – 130V AC					**XTCEXTEYC20A**	
200 – 240V AC					**XTCEXTEYC20B**	
Sealable Shroud						
	Transparent sealable shroud used to protect electronic timer modules from unwanted access.		XTCEXTEE, XTCEXTED, XTCEXTEY	1	**XTCEXTESHRD**	

Discount Symbol **1CD7**

Mini Electronic Timers




Table 34-18. Mini Electronic On-Delay Timers

Conventional Thermal Current I_e (A)	Rated Operational Current I_e AC-11 Amps		Time Range	Function	Terminal Marking According to EN 50042	Catalog Number	Price U.S. $
	220/230/240V	380/400/440V					
6	3	3	1.5 – 30 sec	Fixed, On-delay	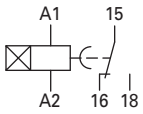	XTMT6A30S11B	
6	3	6	0.05 – 1 sec 0.15 – 3 sec 0.5 – 10 sec 3 – 60 sec 0.15 – 3 min 0.5 – 10 min 3 – 60 min 0.15 – 3 h 0.5 – 10 h 3 – 60 h	Fixed, On-delay		XTMT6A60H11B	
6	3	3	0.05 – 1 sec 0.15 – 3 sec 0.5 – 10 sec 3 – 60 sec 0.15 – 3 min 0.5 – 10 min 3 – 60 min 0.15 – 3 h 0.5 – 10 h 3 – 60 h	Adjustable: On-delayed; Fleeting contact on energization; Flashing; Pulse generating; ON-OFF	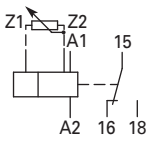	XTMT6A60H70B	

Notes —

Actuating Voltage
24 – 240 50/60 Hz
24 – 240V DC

Admissible Cable Length
Cable unscreened, with cable cross-section 0.5 – 1.5 mm^2
Two-core cable
Two-core cable in the same cable duct with the main cable, 50/60 Hz

Connection to
Y1/Y2, Z1/Z2
M250
M50

Electronic Star-Delta (Wye-Delta) Timers



Table 34-19. Electronic Star-Delta (Wye-Delta) Timers

Conventional Thermal Current I_e (A)	Rated Operational Current I_e AC-11 Amps		Time Range	Function	Terminal Marking According to EN 50042	Catalog Number	Price U.S. $
	230V	400V					
6	3	3	3 – 60 sec	Fixed, Star-Delta	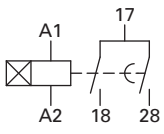	XTTR6A60S51B	

Notes —

Actuating Voltage
24 – 240 50/60 Hz
24 – 240V DC

Admissible Cable Length
Cable unscreened, with cable cross-section 0.5 – 1.5 mm^2
Two-core cable
Two-core cable in the same cable duct with the main cable, 50/60 Hz

Connection to
B1, Z1/Z2
M250
M50

Discount Symbol **1CD7**

34

Technical Data and Specifications

Table 34-20. Relays and Timers — Technical Data and Specifications

Description	XTRE	XTCEXFAC_	XTCEXTE_	XTRM	XTMCXFA_
General					
Standards	IEC/EN 60947, VDE 0660, UL, CSA		DIN EN 61812, IEC/EN 60947, VDE 060, UL, CSA	IEC/EN 60947, VDE 0660, UL, CSA	
Lifespan, Mechanical AC Operated DC Operated	 20,000,000 20,000,000	 10,000,000 10,000,000	 3,000,000 3,000,000	 10,000,000 20,000,000	 10,000,000 20,000,000
Maximum operating frequency (ops/hr)	9000	9000	—	9000	9000
Climatic Proofing	Damp heat, constant, to IEC 60068-2-78; Damp heat, cyclical, to IEC 60068-2-30				
Ambient Temperature Open (°C, min/max) Enclosed (°C, min/max) Ambient Temperature for Storage (°C, min/max)	 -25/60 -25/40 -40/80	 -25/60 -25/40 -40/80	 -40/80 -25 – 60 -25 – 40	 -25/50 -25/40 —	 -25/50 -25/40 —
Mounting Position	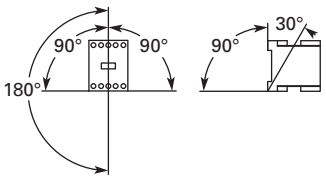		As required, not suspended	As required, except vertically A1/A2 at the bottom	
Mechanical shock resistance (IEC/EN 60068-2-27) Half-sinusoidal shock 10 ms Base unit with auxiliary contact module Make contact Break contact	 7g 5g	 7g 5g	 6g 6g	 10g 8g	 10g 8g
Degree of Protection	IP20	IP20	IP20	IP20	IP20
Protection against direct contact from the front when actuated by a perpendicular test finger (IEC 536)	Finger- and back-of-hand proof				
Weight AC operated (kg) DC operated (kg)	 0.23 0.28	 0.05 0.05	 0.08 0.08	 0.17 0.20	 — —
Terminal capacity Screw terminals Solid (mm^2) Flexible with ferrule (mm^2) Solid or stranded (AWG)	 1 x (0.75 – 4) 2 x (0.75 – 2.5) 1 x (0.75 – 2.5) 2 x (0.75 – 2.5) 18 – 14		 1 x (0.75 – 2.5) 2 x (0.75 – 1.5) 1 x (0.75 – 1.5) 2 x (0.75 – 1.5) 18 – 14	 1 x (0.75 – 2.5) 2 x (0.75 – 2.5) 1 x (0.75 – 1.5) 2 x (0.75 – 1.5) 18 – 14	
Terminal screw	M3.5	M3.5	M3.5	M3.5	M3.5
Pozidriv screwdriver	Size 2	Size 2	Size 2	Size 2	Size 2
Standard screwdriver (mm)	0.8 x 5.5 1 x 6		0.8 x 5.5 1 x 6	0.8 x 5.5 1 x 6	
Max. tightening torque (Nm)	1.2	1.2	1.2	1.2	1.2
Spring cage terminals Solid (mm^2) Flexible with or without ferrule DIN 46228 (mm^2) Solid or stranded (AWG)	 1 x (0.75 – 2.5) 2 x (0.75 – 2.5) 1 x (0.75 – 2.5) 2 x (0.75 – 2.5) 18 – 14		 — — — — —	 1 x (0.75 – 2.5) 2 x (0.75 – 2.5) 1 x (0.75 – 2.5) 2 x (0.75 – 2.5) 18 – 14	
Standard screwdriver (mm)	0.6 x 3.5		—	0.6 x 3.5	
Contacts					
Interlocked opposing contacts to ZH 1/457, including auxiliary contact module	Yes	Yes	No	Yes	Yes
Rated impulse withstand voltage (U_{imp}) V AC	6000	6000	6000	6000	6000
Overvoltage category/pollution degree	III/3	III/3	III/3	III/3	III/3
Rated insulation voltage (U_i) V AC	690	690	600	690	690
Rated operational voltage (U_e) V AC	690	500	400	600	600
Safe isolation to VDE 0106 Part 101 and Part 101/A1 Between coil and auxiliary contacts (V AC) Between the auxiliary contacts (V AC)	 400 400	 400 400	 250 250	 300 300	 300 300
Rated operational current AC-15 220/240V I_e 380/415V I_e 500V I_e	 6 4 1.5	 6 3 —	 Please inquire Please inquire —	 6 3 1.5	 4 2 1.5

Table 34-20. Relays and Timers — Technical Data and Specifications (Continued)

Description		XTRE	XTCEXFAC_	XTCEXTE_	XTRM	XTMCXFA_
Contacts (Continued)						
DC-13 ①						
DC13 L/R ≤ 15 mS						
Contacts in series:	Voltage:					
1	24V	10	10	—	2.5	2.5
1	60V	6	6	—	—	—
2	60V	10	10	—	2.5	2.5
1	110V	3	3	—	—	—
3	110V	6	6	—	1.5	1.5
1	220V	1	1	—	—	—
3	220V	5	5	—	0.5	0.5
DC-13 L/R ≤ 50 mS						
Contacts in series:	Voltage:					
3	24V	4	—	—	—	—
3	60V	4	—	—	—	—
3	110V	2	—	—	—	—
3	220V	1	—	—	—	—
Control circuit reliability (at U_e = 24V DC, U_{min} = 17, I_{min} = 5.4 mA)		Failure rate = $<10^{-8}$, < one failure in 100 million operations		—	Failure rate = $<10^{-8}$, < one failure in 100 million operations	
Conventional thermal current (I_{th})		16	16	6	10	10
Short-circuit rating without welding						
Maximum overcurrent protective device						
220/240V – XTPR Frame B		4	—	—	4	4
380/415V – XTPR Frame B		4	—	—	4	4
Short-circuit protection, max. fuse						
500V (A gG/gL)		10	10	6	6	6
500V (A fast)		—	—	—	10	10
Current heat losses at load of I_{th}						
AC operated (W)		0.3	0.3	—	0.2	0.2
DC operated (W)		0.3	0.3	—	0.3	0.3
Magnet Systems						
Pick-up and drop-out values						
AC operated						
Single-voltage coil 50 Hz and dual-voltage coil 50 Hz, 60 Hz (Pick-up x U_c)		0.8 – 1.1	—	0.85 – 11	0.8 – 1.1	—
Dual-frequency coil 50/60 Hz (Pick-up x U_c)		0.8 – 1.1	—	—	0.85 – 1.1	—
DC operated ②						
Pick -up voltage (Pick-up x U_c)		0.8 – 1.1	—	0.7 – 1.2	0.85 – 1.3	—
At 24V: without auxiliary contact module (40°C) (Pick-up x U_c)		0.7 – 1.3	—	—	0.7 – 1.3	—
Power consumption						
Single-voltage coil 50 Hz and dual-voltage coil 50 Hz, 60 Hz						
Pick-up VA		24	—	—	25	—
Pick-up W		19	—	—	22	—
Sealing VA		3.4	—	2	4.6	—
Sealing W		1.2	—	1.8	1.3	—
Dual-frequency coil 50/60 Hz at 50 Hz						
Pick-up VA		27	—	—	30	—
Pick-up W		22	—	—	26	—
Sealing VA		4.2	—	—	5.4	—
Sealing W		1.4	—	—	1.6	—
Dual-frequency coil 50/60 Hz at 60 Hz						
Pick-up VA		25	—	—	29	—
Pick-up W		21	—	—	24	—
Sealing VA		3.3	—	—	3.9	—
Sealing W		1.2	—	—	1.2	—
DC operated						
Pull-in = sealing (W)		3	—	—	2.6	—
Duty factor (% DF)		100	—	100	100	—
Switching times at 100% U_c (approximate values)						
AC operated closing delay (mS)		≤21	—	—	14 – 21	—
AC operated NO contact opening delay (mS)		≤18	—	—	8 – 18	—
AC operated with auxiliary contact module, max. closing delay (mS)		—	—	—	45	45
DC operated closing delay (mS)		≤31	—	—	26 – 35	—
DC operated NO contact opening delay (mS)		≤12	—	—	15 – 25	—
DC operated with auxiliary contact module, max. closing delay (mS)		—	—	—	70	70

① Making and breaking conditions to DC13, time constant as stated.
② Smoothed DC or three-phase bridge rectifier.

34

Control Relays

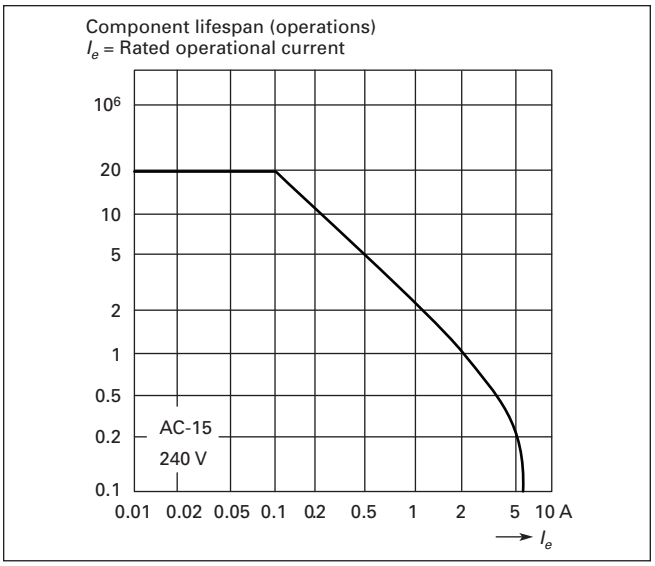

Figure 34-1. XTRE (AC-15) Characteristic Curve

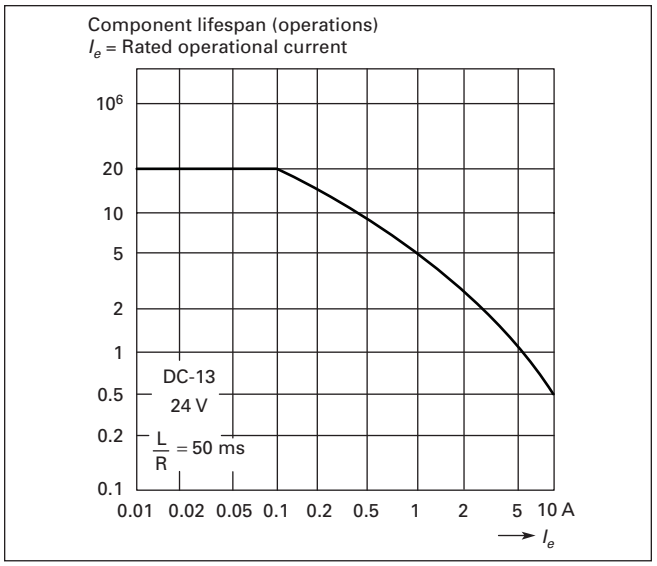

Figure 34-2. XTRE (DC-13) Characteristic Curve ①

① Making and breaking conditions to DC-13, time constant as stated.

The diagrams show the closing and opening travel of the contact of the contactor relays and auxiliary contacts at no load. Tolerances are not taken into consideration.

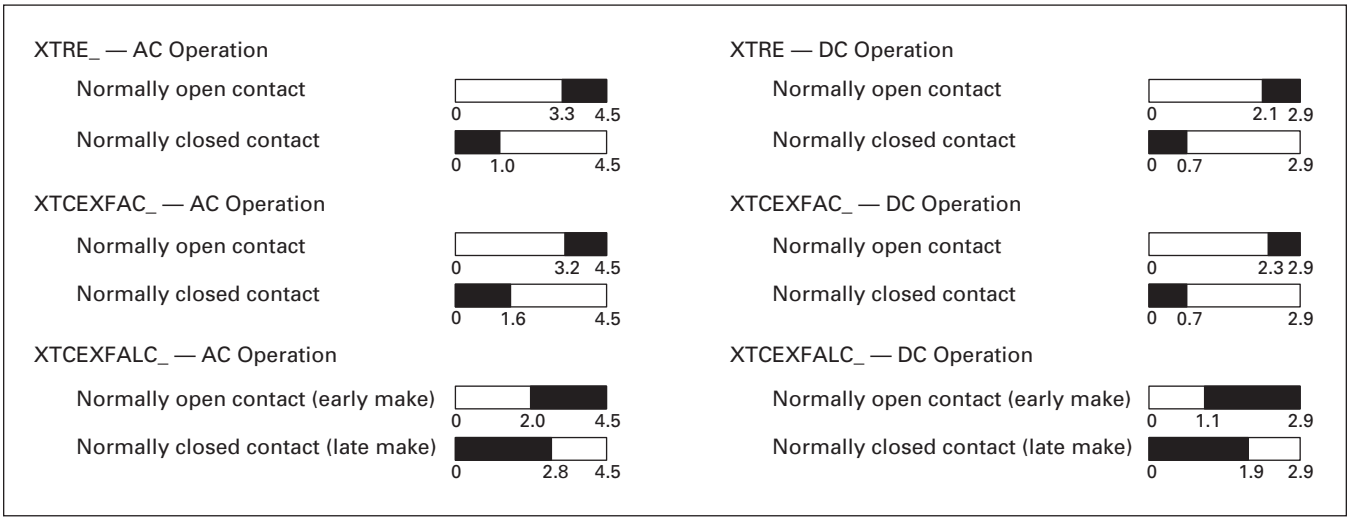

Figure 34-3. Contact Travel Diagrams — XTRE

Flow Diagrams — Electronic Timers

XTMT Mini Timers

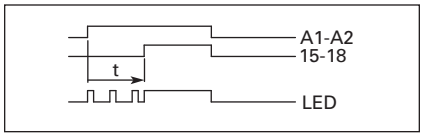

Figure 34-4. On-Delayed

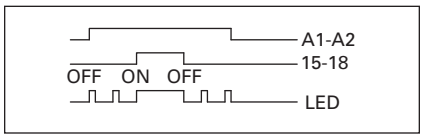

Figure 34-5. ON-OFF Function

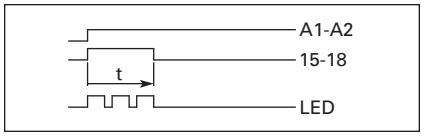

Figure 34-6. Fleeting Contact on Energization

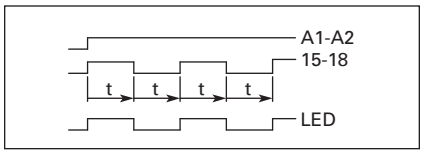

Figure 34-7. Flashing, Pulse Initiating

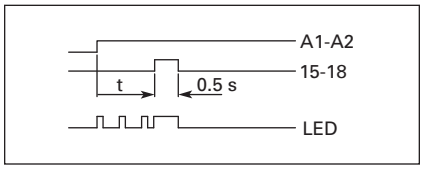

Figure 34-8. Pulse Generating

Star-Delta (Wye-Delta) Timer

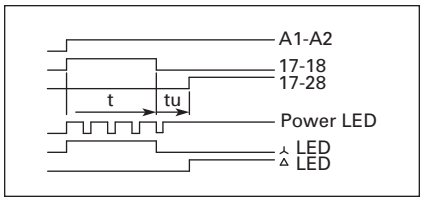

Figure 34-9. Star-Delta

Rating Data

Table 34-21. Rating Data for Approved Types

Pilot Duty	General Use
Control Relays — XTMR	
A600, P300	10A – 600V AC 0.5A – 250V DC
Timers — XTMT, XTTR	
B300	6A – 250V AC

Dimensions

Mini Contactor Relays

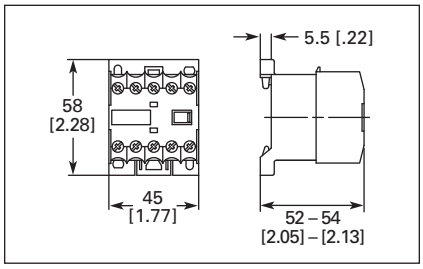

Figure 34-10. Mini Control Relay XTRM — Approximate Dimensions in mm [in.]

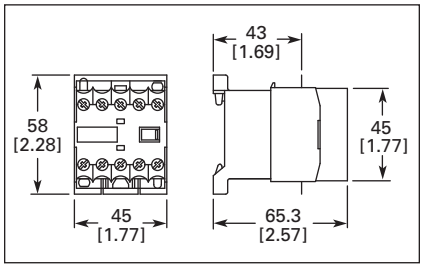

Figure 34-11. XTRM Mini Control Relay with IP40 XTMCX Shroud — Approximate Dimensions in mm [in.]

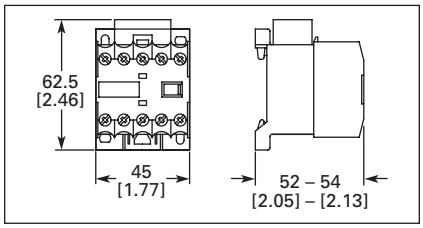

Figure 34-12. XTRM Mini Control Relay with RC or Varistor Suppressor — Approximate Dimensions in mm [in.]

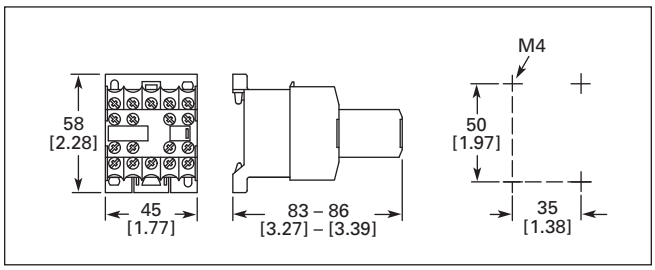

Figure 34-13. XTRM Mini Control Relay with XTMCXFA Auxiliary Contact — Approximate Dimensions in mm [in.]

34

Control Relays

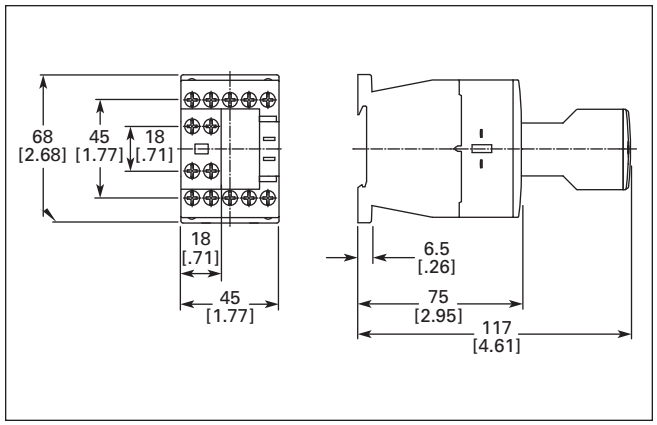

Figure 34-14. Control Relay XTRE with XTCEXFA Auxiliary Contact — Approximate Dimensions in mm [in.]

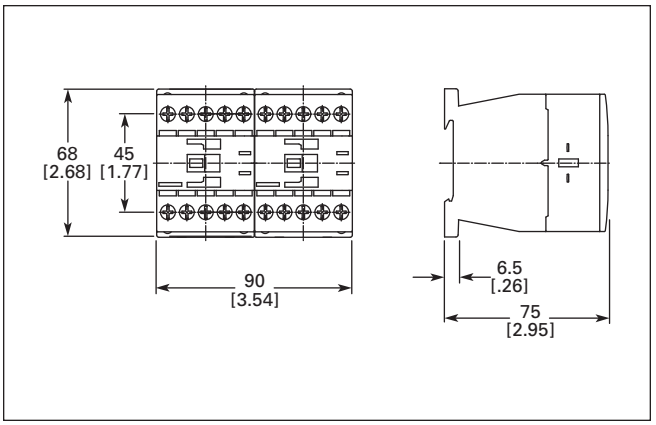

Figure 34-17. Control Relays XTRE with XTCEXMLB Mechanical Interlock — Approximate Dimensions in mm [in.]

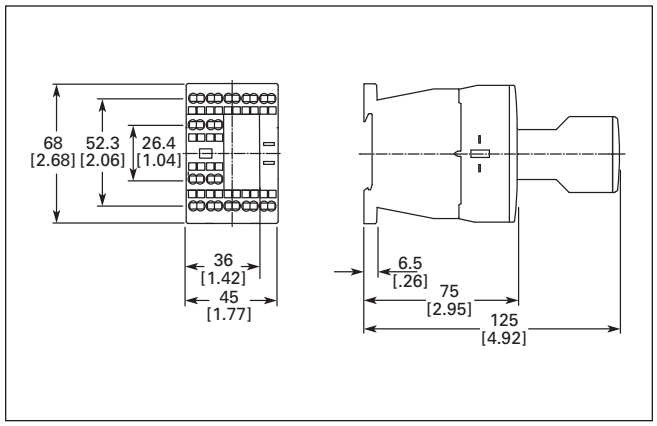

Figure 34-15. Control Relay with Spring Cage Terminals XTREC with XTCEXFA Auxiliary Contact — Approximate Dimensions in mm [in.]

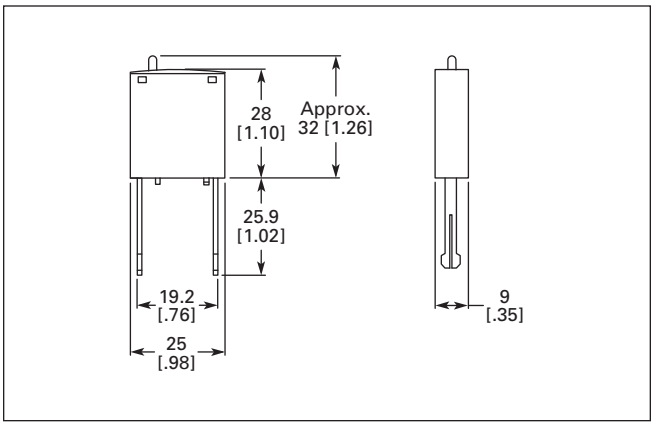

Figure 34-18. Coil Suppressors for Use with XTRE Control Relays — Approximate Dimensions in mm [in.]

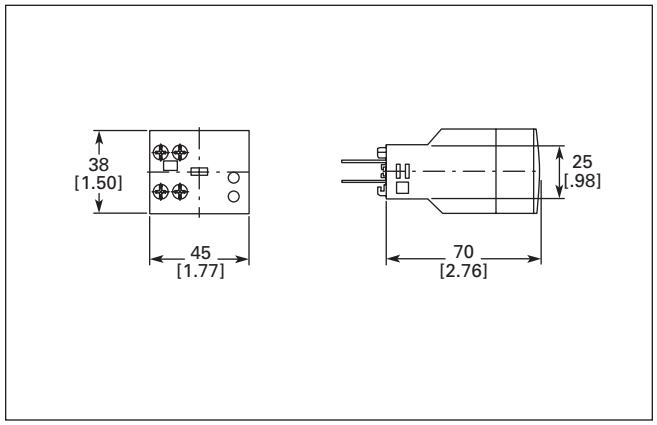

Figure 34-16. Electronic Timer Module XTCEXTE — Approximate Dimensions in mm [in.]

Contents

Description	*Page*
Catalog Number Selection	**34-16**
Product Selection	**34-17**
Non-reversing Mini Contactors	**34-17**
Reversing Mini Contactors	**34-17**
Star-Delta (Wye-Delta) Miniature Contactors	**34-19**
Overload Relays	**34-20**
Accessories	**34-21**
Technical Data and Specifications	**34-24**
Dimensions	**34-29**
Reference Data	**34-210**



XTMC Mini Contactor

Product Description

Eaton's new line of Cutler-Hammer® ***XT*** Miniature Controls includes non-reversing and reversing mini contactors, mini overload relays and snap-on accessories. A wide range of applications is possible including small electrical motors from fractional to 5 hp (460V AC) or up to 4 kW (400V AC).

Application Description

Due to its compact size, the ***XT*** line of mini controls is best suited to be applied in light duty loads such as hoisting, packaging, material handling, heating, lighting and automation systems. ***XT*** mini contactors are a particularly compact, economic and environmentally friendly solution wherever control of small motors or loads is required.

Features

Mini Contactors — Types XTMC and XTMF, 6 – 9A

- AC Control from 12V to 550V 50 Hz, 600V 60 Hz
- DC Control from 12V to 220V
- Available with screw or spring cage terminals
- Reversing or Non-reversing
- 3 and 4-Pole Configurations
  - 3-Pole XTMC
  - 4-Pole XTMF
- Panel or DIN rail mounting
- IP20 finger and back-of-hand proof
- Low noise operation
- High degree of climatic proofing
- Large ambient temperature range -25° to 50°C [-13° to 122°F]

Mini Overload Relays — Bimetallic Type XTOM

- Phase failure sensitivity
- Direct mount to XTMC and XTMF Mini Contactors
- Trip Class 10
- 11 settings to cover 0.1 to 12A
- Ambient temperature compensated -5° to 50°C [23° to 122°F]
- Manual and automatic reset by selector switch
- 1 Make (NO) or 1 Break (NC) auxiliary contact as standard
- Test/Off Button
- Trip-free release

Standards and Certifications

- IEC EN 60947
- CE Approved
- UL
- CSA
- ATEX
- CCC

Instructional Leaflets

Pub51219	Inside of Packaging XTMC, XTMF Mini Contactors, XTRM Mini Control Relay and Accessories
Pub51243	Inside of Packaging XTOM Mini Overload Relays
Pub51206	Mini Reversing Link Kits
MN03402002E	XTOM Mini Overload Relays Installation and User Manual

34

Catalog Number Selection

Table 34-22. *XT* IEC Miniature Contactors — Catalog Numbering System

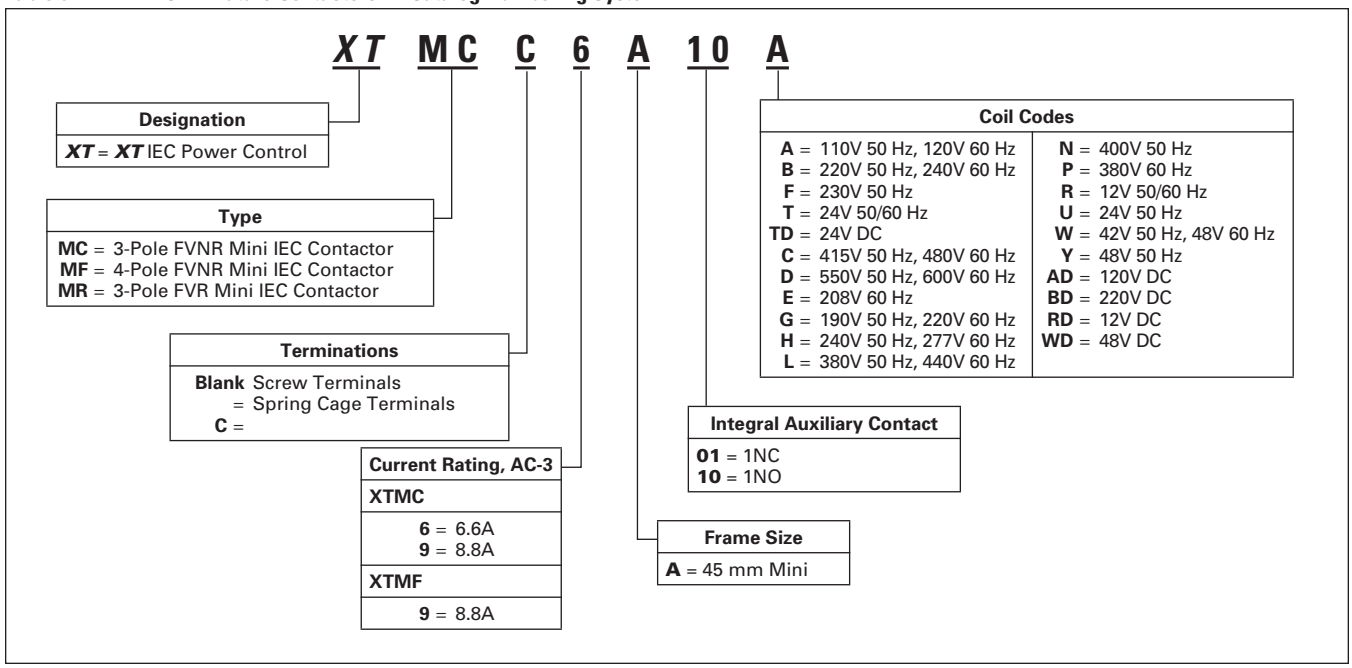

Table 34-23. *XT* IEC Miniature Overload Relays — Catalog Numbering System

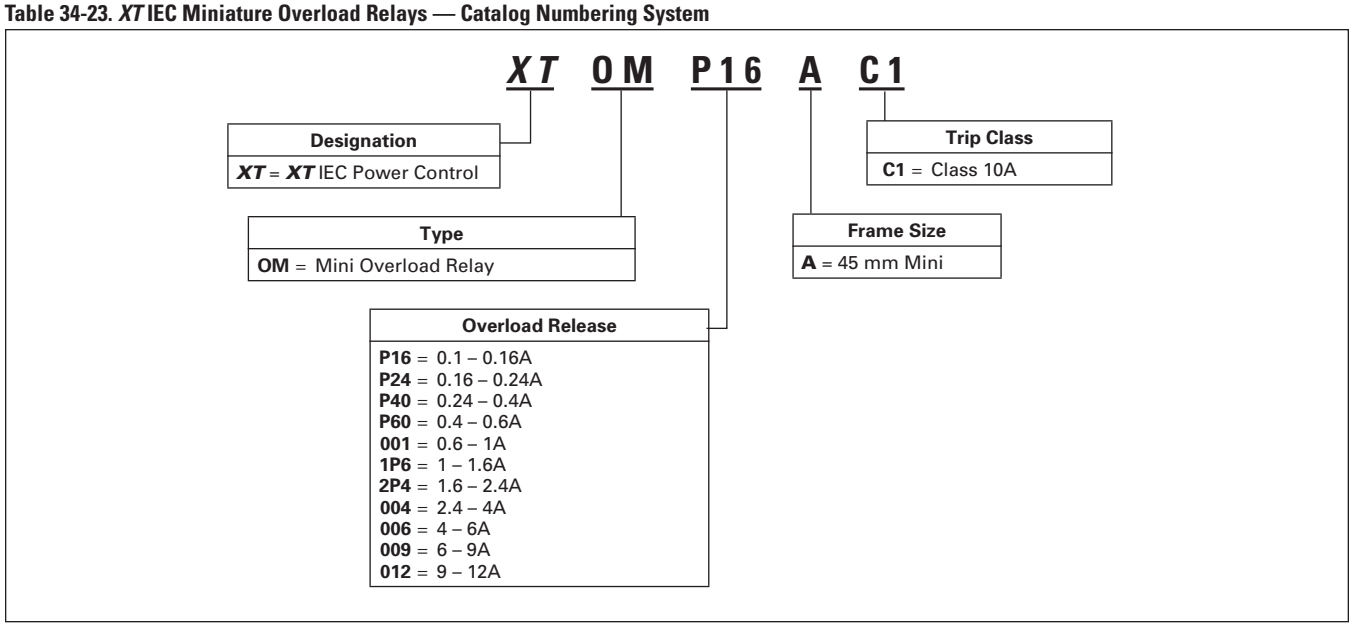

Product Selection

Non-reversing Mini Contactors



Table 34-24. Full Voltage Non-reversing Contactors

Operational Current AC-3 Amp Rating 380/400V	Conventional Free Air Thermal Current AC-1 at 50°C	Maximum kW Ratings AC-3				Maximum Three-phase Motor Rating							No. of Power Poles	Aux. Contacts	Catalog Number ①		Price U.S. $	
		3-Phase Motors 50 – 60 Hz				1-Phase Horsepower Ratings			3-Phase Horsepower Ratings						Screw Terminals	Spring Cage Terminals		
		220 – 240V	380 – 400V	550V	660/ 690V	115V	200V	230V	200V	230V	460V	575V					AC Coil	DC Coil
6.6	20	1.5	3	3	3	1/4	3/4	1	1-1/2	2	3	3	3	1NO	**XTMC6A10_**	**XTMCC6A10_**		
6.6	20	1.5	3	3	3	1/4	3/4	1	1-1/2	2	3	3	3	1NC	**XTMC6A01_**	**XTMCC6A01_**		
8.8	20	2.2	4	4	4	1/2	1	1-1/2	2	3	5	5	3	1NO	**XTMC9A10_**	**XTMCC9A10_**		
8.8	20	2.2	4	4	4	1/2	1	1-1/2	2	3	5	5	3	1NC	**XTMC9A01_**	**XTMCC9A01_**		
8.8	20	2.2	4	4	4	1/2	1	1-1/2	2	3	5	5	4	—	**XTMF9A00_**	**—**		

① Underscore (_) indicates Magnetic Coil Suffix required. See **Table 34-26**.

Reversing Mini Contactors

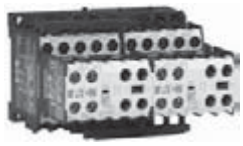

Table 34-25. Full Voltage Reversing Contactors

Operational Current AC-3 Amp Rating 380/400V	Conventional Free Air Thermal Current AC-1 at 50°C	Maximum kW Ratings AC-3				Maximum 3-Phase Current Motor Rating							Spare Auxiliary Contacts		Catalog Number ②③	Price U.S. $	
		3-Phase Motors 50 – 60 Hz				1-Phase hp Ratings			3-Phase hp Ratings				K1M	K2M		AC	DC
		220/ 230/ 240V	380/ 400/ 440V	500V	660/ 690V	115V	200V	230V	200V	230V	460V	575V					
6.6	20	1.5	3	3	3	1/4	3/4	1	1-1/2	2	3	3			**XTMR6A21_**		
8.8	20	2.2	4	4	4	1/2	1	1-1/2	2	3	5	5			**XTMR9A21_**		

② Underscore (_) indicates Magnetic Coil Suffix required. See **Table 34-26**.

③ The factory installed reversing mini contactor includes (2) XTMC...01 Contactors, (2) XTMCXFA20 2NO Front Mount Auxiliary Contacts (1) XTMCXRL Reversing Link Kit and (1) XTMCXML Mechanical Interlock.

Overload Relays ..... **Page 34-20**
Accessories ..... **Page 34-21**
Dimensions ..... **Page 34-29**
Discount Symbol **1CD7**

34

Table 34-26. Magnet Coil Suffix

Coil Voltage	Suffix Code	Coil Voltage	Suffix Code	Coil Voltage	Suffix Code	Coil Voltage	Suffix Code ①
110V 50 Hz, 120V 60 Hz	**A**	415V 50 Hz, 480V 60 Hz	**C**	400V 50 Hz	**N**	120V DC	**AD**
220V 50 Hz, 240V 60 Hz	**B**	550V 50 Hz, 600V 60 Hz	**D**	380V 60 Hz	**P**	220V DC	**BD**
230V 50 Hz	**F**	208V 60 Hz	**E**	12V 50/60 Hz	**R**	12V DC	**RD**
24V 50/60 Hz	**T**	190V 50 Hz, 220V 60 Hz	**G**	24V 50 Hz	**U**	48V DC	**WD**
24V DC	**TD** ①	240V 50 Hz, 277V 60 Hz	**H**	42V 50 Hz, 48V 60 Hz	**W**	—	—
—	—	380V 50 Hz, 440V 60 Hz	**L**	48V 50 Hz	**Y**	—	—

① With DC Operation: Integrated diode resistor combination, coil rating 2.6W.

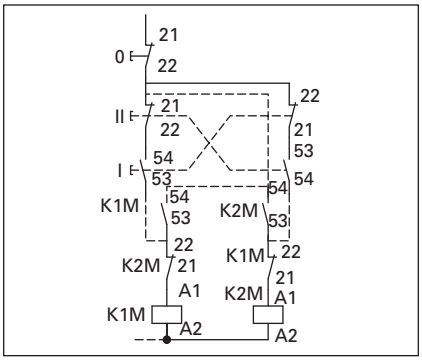

Figure 34-19. XTMR Reversing Contactor Control Wiring Diagram

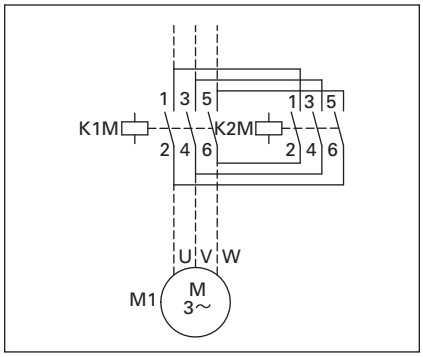

Figure 34-20. XTMR Reversing Contactor Power Wiring Diagram

Notes:

IEC Utilization Categories, see **Page 34-210**, Reference Data.

AC-1: Non-inductive or slightly inductive loads.

AC-3: Squirrel-cage motors — starting, switching of motors during running.

AC-4: Squirrel-cage motors — starting, plugging, inching.

Star-Delta (Wye-Delta) Miniature Contactors

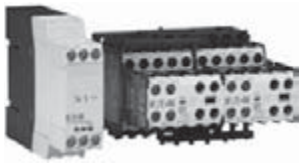

Table 34-27. Star-Delta (Wye-Delta) Miniature Contactor Configuration ①

Maximum kW Ratings AC-3			Maximum 3-Phase Current Motor Rating							Max. Changeover Time (sec.)	Spare Auxiliary Contacts	Components	
3-Phase Motors 50 – 60 Hz			1-Phase hp Ratings			3-Phase hp Ratings						Description	Catalog Number ②
220/230/240V	380/400/440V	500V	115V	200V	230V	200V	230V	460V	575V		K1M		
4	5.5	5.5	1/2	1	1-1/2	2	3	5	7-1/2	30	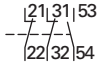	K1M Main Contactor	**XTMC9A10_**
												K1M Auxiliary Contact	**XTMCXFC22**
												K5M Delta Contactor	**XTMC9A01_**
												K3M Star Contactor	**XTMC9A10_**
												K3M Auxiliary Contact	**XTMCXFC02**
												K1T Timing Relay	**XTTR6A60S51B**

① Operating Frequency: 30 Starts/hour
② Underscore (_) indicates magnet coil suffix required. See **Table 34-29**.

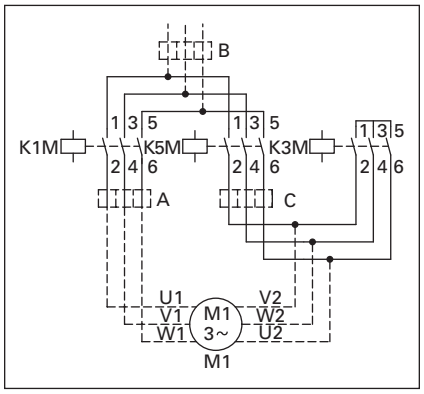

Figure 34-21. Star-Delta (Wye-Delta) Power Wiring Diagram

Table 34-28. Mini Overload Relay Settings (A)

Setting	Starting
A: I_N x 0.58	≤ 15 sec
Motor Protection in the Y and Delta Configurations.	
B: I_N x 1	15 – 40 sec
Only partial motor protection in star position	
C: I_N x 0.58	> 40 sec
Motor not protected in star position.	
Timing Relay set to approximately 10 sec.	

Note: Depending on the coordination type required (i.e. Type 1 or Type 2) it must be established whether the fuse protection and the input wiring for the main and delta contactors are to be common or separate.

Table 34-29. Magnet Coil Suffix

Coil Voltage	Suffix Code	Coil Voltage	Suffix Code	Coil Voltage	Suffix Code	Coil Voltage	Suffix Code ③
110V 50 Hz, 120V 60 Hz	**A**	415V 50 Hz, 480V 60 Hz	**C**	400V 50 Hz	**N**	120V DC	**AD**
220V 50 Hz, 240V 60 Hz	**B**	550V 50 Hz, 600V 60 Hz	**D**	380V 60 Hz	**P**	220V DC	**BD**
230V 50 Hz	**F**	208V 60 Hz	**E**	12V 50/60 Hz	**R**	12V DC	**RD**
24V 50/60 Hz	**T**	190V 50 Hz, 220V 60 Hz	**G**	24V 50 Hz	**U**	48V DC	**WD**
24V DC	**TD** ③	240V 50 Hz, 277V 60 Hz	**H**	42V 50 Hz, 48V 60 Hz	**W**	—	—
—	—	380V 50 Hz, 440V 60 Hz	**L**	48V 50 Hz	**Y**	—	—

③ With DC Operation: Integrated diode resistor combination, coil rating 2.6W.

Overload Relays ..... **Page 34-20**
Accessories ..... **Page 34-21**
Dimensions ..... **Page 34-29**
Discount Symbol **1CD7**

34

Overload Relays



Table 34-30. Mini Overload Relays ①②

Overload Release I_t	Trip Class	Contact Sequence	Contact Configuration	Short Circuit Protection (A)				Catalog Number	Price U.S. $
				Type 1 Coordination, gG/gL	Type 2 Coordination, gG/gL	Circuit Breaker	CEC/NEC Fuse		
0.1 – 0.16A	10A	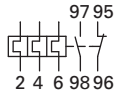	1NO-1NC	20	0.5	15	—	**XTOMP16AC1**	
0.16 – 0.24A				20	1	15	—	**XTOMP24AC1**	
0.24 – 0.4A				20	2	15	—	**XTOMP40AC1**	
0.4 – 0.6A				20	2	15	—	**XTOMP60AC1**	
0.6 – 1A	10A		1NO-1NC	20	4	15	3	**XTOM001AC1**	
1 – 1.6A				20	6	15	6	**XTOM1P6AC1**	
1.6 – 2.4A				20	6	15	6	**XTOM2P4AC1**	
2.4 – 4A	10A		1NO-1NC	20	10	15	15	**XTOM004AC1**	
4 – 6A				20	10	15	20	**XTOM006AC1**	
6 – 9A				20	10	15	35	**XTOM009AC1**	
9 – 12A				—	—	—	45	**XTOM012AC1**	

① Short-circuit protection:
Observe the maximum permissible fuse of the contactor with direct device mounting. See **MN03402002E** for more information.

② When fitted directly to the contactor, a clearance of at least 5 mm is required between the overload relays.

Tripping Characteristics Chart

These tripping characteristics are mean values of the spread at 20°C ambient temperature in a cold state. Tripping time depends on response current. With devices at operating temperature, the tripping time of the overload relay reduces to approx. 25% of the read off value. Specific characteristics for each individual setting range can be found on **Page 34-28**.

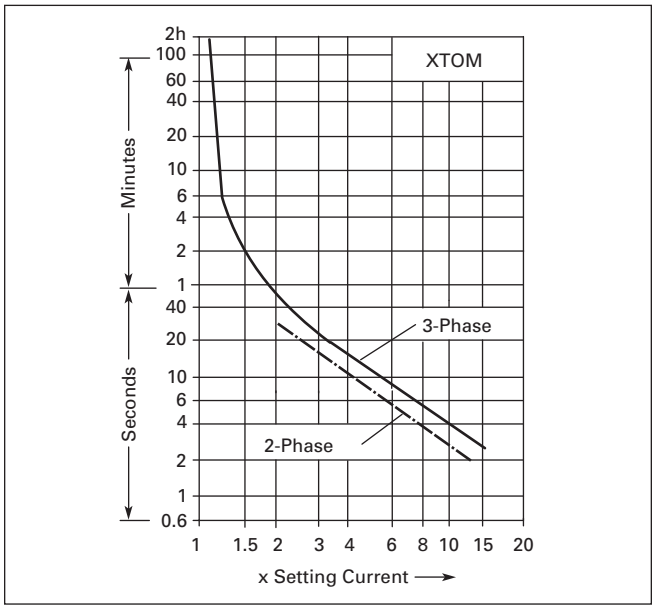

Figure 34-22. Tripping Characteristics

Dimensions ..... **Page 34-29**
Discount Symbol **1CD7**

Accessories

Auxiliary Contacts

Front mounted snap-on auxiliary contacts for mini contactors are available with screw or spring cage terminals in a variety of contact configurations. Auxiliary contact modules are standard with interlocked opposing contacts, except in the case of early-make or late-break contacts.

Table 34-31. Front Mount Auxiliary Contacts for Use with Mini Contactors

Conventional Free Air Thermal Current, $I_{th} = I_e$, AC-1 in Amps	Contact Configuration	Contact Sequence	Package Qty.	Catalog Number		Price U.S. $ ①
				Screw Terminals	Spring Cage Terminals	
10	2NC		5	**XTMCXFC02**	—	
10	1NO-1NC	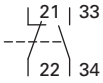	5	**XTMCXFD11**	**XTMCXFDC11**	
10	2NO-2NC	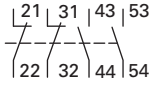	5	**XTMCXFC22**	**XTMCXFCC22**	
10	2NC		5	**XTMCXFA02**	—	
10	1NO-1NC	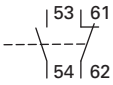	5	**XTMCXFA11**	**XTMCXFAC11**	
10	2NO		5	**XTMCXFA20**	—	
10	$1NO_E$-$1NC_L$	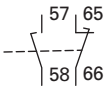	5	**XTMCXFAL11** ②	—	
10	4NC	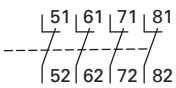	5	**XTMCXFA04**	**XTMCXFAC04**	
10	1NO-3NC	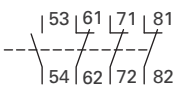	5	**XTMCXFA13**	**XTMCXFAC13**	
10	2NO-2NC	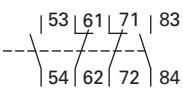	5	**XTMCXFA22**	**XTMCXFAC22**	
10	3NO-1NC	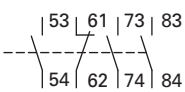	5	**XTMCXFA31**	**XTMCXFAC31**	
10	4NO	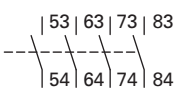	5	**XTMCXFA40**	**XTMCXFAC40**	
10	1NO-1NC 1N O_E-$1NC_L$	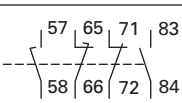	5	**XTMCXFAL22** ②	**XTMCXFCLC22** ②	

① Orders must be placed in multiples of package quantity listed.
② 1 early-make contact (NO_E), 1 late-break contact (NC_L).

Discount Symbol **1CD7**

34

RC Suppressor





Table 34-32. RC Suppressor ①

Voltage	For Use with…	Circuit Symbol	Package Qty.	Catalog Number	Price U.S. $ ②
24 – 48	XTMC6A…, XTMC9A…	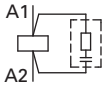	10	**XTMCXRSW**	
48 – 130	XTMC6A…, XTMC9A…		10	**XTMCXRSA**	
110 – 250	XTMC6A…, XTMC9A…		10	**XTMCXRSB**	
24 – 48	XTMCC6A…, XTMCC9A…		10	**XTMCXRSCW**	
48 – 130	XTMCC6A…, XTMCC9A…		10	**XTMCXRSCA**	
110 – 250	XTMCC6A…, XTMCC9A…		10	**XTMCXRSCB**	

① For AC operated contactors, 50/60 Hz. Note drop-out delay.
② Orders must be placed in multiples of package quantity listed.

Varistor Suppressor





Table 34-33. Varistor Suppressor ③

Voltage	For Use with…	Circuit Symbol	Package Qty.	Catalog Number	Price U.S. $ ④
24 – 48	XTMC6A…, XTMC9A…	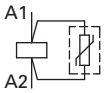	10	**XTMCXVSW**	
48 – 130	XTMC6A…, XTMC9A…		10	**XTMCXVSA**	
110 – 250	XTMC6A…, XTMC9A…		10	**XTMCXVSB**	
380 – 415	XTMC6A…, XTMC9A…		10	**XTMCXVSN**	
24 – 48	XTMCC6A…, XTMCC9A…		10	**XTMCXVSCW**	
48 – 130	XTMCC6A…, XTMCC9A…		10	**XTMCXVSCA**	
110 – 250	XTMCC6A…, XTMCC9A…		10	**XTMCXVSCB**	

③ For AC operated contactors, 50/60 Hz. DC operated contactors have integrated varistor suppressors.
④ Orders must be placed in multiples of package quantity listed.

Mechanical Interlock



Table 34-34. Mechanical Interlock

Description	Package Qty.	Catalog Number	Price U.S. $ ⑤
Mechanical Interlock	5	**XTMCXML**	

⑤ Orders must be placed in multiples of package quantity listed.

Note:
- For two contactors with AC or DC operated magnet system that are horizontally or vertically mounted, the distance between contactors is 0 mm, and the mechanical lifespan is 2.5 x 10^6 operations.

Reversing Link Kit



Table 34-35. Reversing Link Kit

Description	Package Qty.	Catalog Number	Price U.S. $
Main current wiring for reversing contactors and starters.	1	**XTMCXRL**	

Notes:
- The following control cables are integrated as part of the electrical interlock:
  K1M: A1 — K2M: 21; K1M: 21 — K2M: A1
- Reversing Link Kit does not include mechanical interlock. See **Table 34-34** for Mechanical Interlock.

Star-Delta (Wye-Delta) Link Kit



Table 34-36. Star-Delta (Wye-Delta) Link Kit

Description	Package Qty.	Catalog Number	Price U.S. $
Main current wiring for star-delta (wye-delta) combinations. Includes the Star-Delta Bridge.	1	**XTMCXSDL**	

Notes:
- The following control cables are integrated in addition to the electrical interlock:
  K3M: A1 — K5M: 21; K3M: 21 — K5M: A1; K3M: A2 — K5M: A2
- When combined with overload relay use separate mounting.

Discount Symbol **1CD7**

Star-Delta (Wye-Delta) Bridge



Table 34-37. Star-Delta (Wye-Delta) Bridge

Contact Sequence	Package Qty.	Catalog Number	Price U.S. $ ①
	20	**XTMCXSDB** ②	

① Orders must be placed in multiples of package quantity listed.
② Protected against direct contact in accordance with IEC 536.

Paralleling Link Set for Main Contacts



Table 34-38. Paralleling Link Set for Main Contacts

Contact Sequence	Package Qty.	Catalog Number	Price U.S. $ ③
	5	**XTMCXPLK** ④⑤⑥	

③ Orders must be placed in multiples of package quantity listed.
④ Protected against direct contact in accordance with IEC 536.
⑤ 4th pole can be broken off:
4-pole: I_{th} = 60A; 3-pole: I_{th} = 50A
⑥ AC-1 current carrying capacity of the open contactor increases by a factor of 2.5.

Connector



Table 34-39. Connector

Description	Package Qty.	Catalog Number	Price U.S. $ ⑦
For mechanically arranging contactors and timing relays in combinations.	50	**XTMCXCN** ⑧	

⑦ Orders must be placed in multiples of package quantity listed.
⑧ 0 mm distance between contactors.

IP40 Sealable Transparent Shroud



Table 34-40. IP40 Sealable Transparent Shroud

Description	Package Qty.	Catalog Number	Price U.S. $
IP40 Sealable Transparent Shroud, snap fitting on mini contactor.	1	**XTMCXSHROUD**	

Discount Symbol **1CD7**

Technical Data and Specifications

Table 34-41. *XT* Miniature Controls — General Specifications

Description	XTMC6A…		XTMC9A…		XTMF9A…	
	AC Coils	DC Coils	AC Coils	DC Coils	AC Coils	DC Coils
Physical and Electrical (Continued)						
Standards	IEC/EN 60947, VDE 0660, CSA, UL, CCC					
Weights in kg [lb]	0.2 [0.44]	0.17 [0.37]	0.2 [0.44]	0.17 [0.34]	0.2 [0.44]	0.17 [0.37]
Mechanical Life — Operations	10,000,000	20,000,000	10,000,000	20,000,000	20,000,000	—
Mechanical Life — Coil @ 50 Hz	7	—	7	—	7	—
Maximum mechanical operating frequency (ops/hr)	9000					
Insulation Voltage (U_i) VAC	690	690	690	690	690	690
Impulse Withstand Voltage (U_{imp}) VAC	6000	6000	6000	6000	6000	6000
Operational Voltage (U_e) VAC	690	690	690	690	690	690
Safe Isolation to VDE 0106 Part 101 and Part 101/A1 between coil and contacts (VAC) between contacts (VAC)	 300 300	 300 300	 300 300	 300 300	 300 300	 300 300
Making Capacity (amps)	110	110	110	110	110	110
Breaking Capacity (amps) 220/230V 380/400V 500V 660/690V	 90 90 64 54	 90 90 64 54	 90 90 64 54	 90 90 64 54	 90 90 64 54	 90 90 64 54
Short-Circuit Protection rating maximum fuse (gL/gG) Type 2 Coordination (A) Type 1 Coordination (A)	 10 20	 10 20	 10 20	 10 20	 10 20	 10 20
Degree of Protection	IP20					
Protection against direct contact when actuated from front (IEC 536)	Finger- and back-of-hand proof					
Terminal Capacity of main and auxiliary contacts Solid (mm^2)	 1 x (0.75 – 2.5) 2 x (0.75 – 2.5)	 1 x (0.75 – 2.5) 2 x (0.75 – 2.5)	 1 x (0.75 – 2.5) 2 x (0.75 – 2.5)	 1 x (0.75 – 2.5) 2 x (0.75 – 2.5	 1 x (0.75 – 2.5) 2 x (0.75 – 2.5)	 1 x (0.75 – 2.5) 2 x (0.75 – 2.5)
Flexible with ferrule (mm^2)	1 x (0.75 – 1.5) 2 x (0.75 – 1.5)	1 x (0.75 – 1.5) 2 x (0.75 – 1.5)	1 x (0.75 – 1.5) 2 x (0.75 – 1.5)	1 x (0.75 – 1.5) 2 x (0.75 – 1.5)	1 x (0.75 – 1.5) 2 x (0.75 – 1.5)	1 x (0.75 – 1.5) 2 x (0.75 – 1.5)
Solid or Stranded (AWG)	18-14	18-14	18-14	18-14	18-14	18-14
Terminal Screw	M3.5	M3.5	M3.5	M3.5	M3.5	M3.5
Pozidriv screwdriver	Size 2	Size 2	Size 2	Size 2	Size 2	Size 2
Standard screwdriver (mm)	0.8 x 5.5 1 x 6	0.8 x 5.5 1 x 6	0.8 x 5.5 1 x 6	0.8 x 5.5 1 x 6	0.8 x 5.5 1 x 6	0.8 x 5.5 1 x 6
Max. Tightening Torque Nm Lb-in	 1.2 10.6	 1.2 10.6	 1.2 10.6	 1.2 10.6	 1.2 10.6	 1.2 10.6
Terminal Capacity of spring cage main terminals Solid (mm^2)	 1 x (1 – 2.5) 2 x (1 – 2.5)	 1 x (1 – 2.5) 2 x (1 – 2.5)	 1 x (1 – 2.5) 2 x (1 – 2.5)	 1 x (1 – 2.5) 2 x (1 – 2.5)	 1 x (1 – 2.5) 2 x (1 – 2.5)	 1 x (1 – 2.5) 2 x (1 – 2.5)
Flexible with ferrule (mm^2)	1 x (1 – 2.5) 2 x (1 – 2.5)	1 x (1 – 2.5) 2 x (1 – 2.5)	1 x (1 – 2.5) 2 x (1 – 2.5)	1 x (1 – 2.5) 2 x (1 – 2.5)	1 x (1 – 2.5) 2 x (1 – 2.5)	1 x (1 – 2.5) 2 x (1 – 2.5)
Standard screwdriver (mm)	0.6 x 3.5	0.6 x 3.5	0.6 x 3.5	0.6 x 3.5	0.6 x 3.5	0.6 x 3.5
Mounting Position	As required, except vertical with terminals A1/A2 at the bottom 					

Environmental

Ambient Temperature	-25° to 50°C [-13° to 122°F]					
Mechanical Shock Resistance (IEC/EN 60068-2-27) Half-sinusoidal shock 10 ms Contactor without auxiliary contact module Main contact — make contact Main contact — break/make contact Contactor with auxiliary contact module Main contact — make contact Main contact — make/break contact	 10g 10/8g 10g 20/20g	 10g 10/8g 10g 20/20g	 10g 10/8g 10g 20/20g	 10g 10/8g 10g 20/20g	 10g — 10g 20/20g	 10g — 10g 20/20g
Climatic Proofing	Damp heat, constant, to IEC 60 068-2-78; Damp heat, cyclic, to IEC 60 068-2-30					
Pollution Degree	III/3	III/3	III/3	III/3	III/3	III/3

Table 34-42. *XT* Miniature Controls — Magnet Systems

Description	XTMC6A…		XTMC9A…		XTMF9A…	
	AC Coils	DC Coils	AC Coils	DC Coils	AC Coils	DC Coils
Voltage Tolerance						
Pick-Up (x U_C)						
Single-voltage coil 50 Hz and dual-voltage coil 50 Hz, 60 Hz	0.8 – 1.1	—	0.8 – 1.1	—	0.8 – 1.1	—
Dual frequency coil 50/60 Hz	0.85 – 1.1	—	0.85 – 1.1	—	0.85 – 1.1	—
DC operated ①	—	0.8 – 1.1	—	0.8 – 1.1	—	0.85 – 1.1
Power Consumption						
AC Operation						
Pick-Up VA						
Single-voltage coil 50 Hz and dual-voltage coil 50 Hz, 60 Hz	25	—	25	—	25	—
Dual frequency coil 50/60 Hz at 50 Hz	30	—	30	—	30	—
Dual frequency coil 50/60 Hz at 60 Hz	29	—	29	—	29	—
Pick-Up W						
Single-voltage coil 50 Hz and dual-voltage coil 50 Hz, 60 Hz	22	—	22	—	22	—
Dual frequency coil 50/60 Hz at 50 Hz	26	—	26	—	26	—
Dual frequency coil 50/60 Hz at 60 Hz	24	—	24	—	24	—
Sealing VA						
Single-voltage coil 50 Hz and dual-voltage coil 50 Hz, 60 Hz	4.6	—	4.6	—	4.6	—
Dual frequency coil 50/60 Hz at 50 Hz	5.4	—	5.4	—	5.4	—
Dual frequency coil 50/60 Hz at 60 Hz	3.9	—	3.9	—	3.9	—
Sealing W						
Single-voltage coil 50 Hz and dual-voltage coil 50 Hz, 60 Hz	1.3	—	1.3	—	1.3	—
Dual frequency coil 50/60 Hz at 50 Hz	1.6	—	1.6	—	1.6	—
Dual frequency coil 50/60 Hz at 60 Hz	1.1	—	1.1	—	1.1	—
DC operated ①						
Power consumption pick-up = sealing (VA/W)	—	2.6	—	2.6	—	2.6
Duty Factor (%)	100	100	100	100	100	100
Switching Time at 100% U_C						
Make Contact						
Closing delay min (mS)	14	26	14	26	14	26
Closing delay max (mS)	21	35	21	35	21	35
Opening delay min (mS)	8	15	8	15	8	15
Opening delay max (mS)	18	25	18	25	18	25
Closing delay with top mounting auxiliary contact (mS)	max. 45	max. 70	max. 45	max. 70	max. 45	max. 70
Reversing Contactors						
Changeover time at 100% U_C						
Min (mS)	16	40	16	40	16	40
Max (mS)	21	50	21	50	21	50
Arcing time at 690V AC (mS)	max. 12	max. 12	max. 12	max. 12	max. 12	max. 12

① Smoothed DC or three-phase bridge rectifier.

Table 34-43. XT Miniature Controls

Description	XTMC6A…		XTMC9A…		XTMF9A…	
	AC Coils	DC Coils	AC Coils	DC Coils	AC Coils	DC Coils
AC-1 Operation						
Conventional free air thermal current, 3-pole, 50 – 60 Hz (A)						
at 40°C (I_{th})	22	22	22	22	22	22
at 50°C (I_{th})	20	20	20	20	20	20
at 55°C (I_{th})	19	19	19	19	19	19
Conventional free air thermal current, 1-pole (I_{th})	50	50	50	50	60	60
AC-3 Operation						
Rated Operational Current, 50/60 Hz ① (I_e) in amperes (A)						
220/230V	6.6	6.6	9.0	9.0	9.0	9.0
240V	6.6	6.6	9.0	9.0	9.0	9.0
380/400V	6.6	6.6	9.0	9.0	9.0	9.0
415V	6.6	6.6	9.0	9.0	9.0	9.0
440V	6.6	6.6	9.0	9.0	9.0	9.0
500V	5	5	6.4	6.4	6.4	6.4
660/690V	3.5	3.5	4.8	4.8	4.8	4.8
Rated power (P) in kilowatts (kW)						
220/230V	1.5	1.5	2.2	2.2	2.2	2.2
240V	1.8	1.8	2.5	2.5	2.5	2.5
380/400V	3	3	4	4	4	4
415V	3.1	3.1	4.3	4.3	4.3	4.3
440V	3.3	3.3	4.6	4.6	4.6	4.6
500V	3	3	4	4	4	4
660/690V	3	3	4	4	4	4
AC-4 Operation						
Rated Operational Current, 50/60 Hz ① (I_e) in amperes (A)						
220/230V	5	5	6.6	6.6	6.6	6.6
240V	5	5	6.6	6.6	6.6	6.6
380/400V	5	5	6.6	6.6	6.6	6.6
415V	5	5	6.6	6.6	6.6	6.6
440V	5	5	6.6	6.6	6.6	6.6
500V	3.7	3.7	5	5	5	5
660/690V	2.9	2.9	3.4	3.4	3.4	3.4
Rated power (P) in kilowatts (kW)						
220/230V	1.1	1.1	1.5	1.5	1.5	1.5
240V	1.3	1.3	1.8	1.8	1.8	1.8
380/400V	2.2	2.2	3	3	3	3
415V	2.3	2.3	3.1	3.1	3.1	3.1
440V	2.4	2.4	3.3	3.3	3.3	3.3
500V	2.2	2.2	3	3	3	3
660/690V	2.2	2.2	3	3	3	3

① At maximum permissible ambient temperature.

Table 34-44. *XT* Miniature Controls

Description	XTMC6A…		XTMC9A…		XTMF9A…	
	AC Coils	DC Coils	AC Coils	DC Coils	AC Coils	DC Coils
DC-1 Operation ②						
12V	20	20	20	20	—	—
24V	20	20	20	20	—	—
60V	20	20	20	20	—	—
110V	20	20	20	20	—	—
220V	20	20	20	20	—	—
DC-3 Operation ②						
12V	6	6	8	8	—	—
24V	6	6	8	8	—	—
60V	3	3	4	4	—	—
110V	2	2	3	3	—	—
220V	—	—	—	—	1	1
DC-4 Operation ②						
12V	1.8	1.8	2.5	2.5	—	—
24V	1.8	1.8	2.5	2.5	—	—
60V	1.8	1.8	2.5	2.5	—	—
110V	1.1	1.1	1.5	1.5	2.5	2.5
220V	0.2	0.2	0.3	0.3	1	1
Current Heat Loss (3- or 4-pole) in watts						
at I_{th}	2	3.5	2	3.5	2.7	4.7
at I_e to AC-3/400V	0.3	0.4	0.5	0.7	—	—

② Rated operation current (I_e) in amperes, at maximum permissible ambient temperature.

Table 34-45. *XT* Miniature Controls — Auxiliary Contacts

Description	Built-in Auxiliary XTMC	Add-on Auxiliary XTMCXF…
Interlocked opposing contacts to ZH1/457, including auxiliary contact module	Yes	Yes
Rated impulse withstand voltage, U_{imp} (VAC)	6000	6000
Overvoltage category / pollution degree	III/3	III/3
Rated insulation voltage, U_i (VAC)	690	690
Rated operational voltage, U_e (VAC)	600	600
Safe isolation to VDE 0106 Part 101 and Part 101(A) in VAC between coil and auxiliary contacts between the auxiliary contacts	 300 300	 300 300
Rated Operational Current AC-15, I_e 220/240V 380/415V 500V DC-13 (Contacts in Series) 1: 24V 2: 60V 3: 100V 3: 220V	 6A 3A 1.5A 2.5A 2.5A 1.5A 0.5A	 4A 2A 1.5A 2.5A 2.5A 1.5A 0.5A
Conventional thermal current, I_{th}	10A	10A
Control circuit reliability (at U_e = 24 VDC, U_{min} = 17 V, I_{min} = 5.4 mA)	<10-8, < one failure at 100 million operations	
Component Lifespan at U_e = 240V AC-15, operations x 10^6 DC-13 L/R = 50 mS: 2 contacts in series at I_e = 0.5A, operations x 10^6	 0.2 0.15	 0.2 0.15
Short Circuit rating without welding Short Circuit protection rating maximum fuse, 500V gG/gL Short Circuit protection rating maximum fuse, 500V fast	 6A 10A	 6A 10A
Current heat loss at conventional free air thermal current I_{th} per contact, W	0.2	0.2

Electrical Switching Operation Charts

Squirrel-cage motors
Operating characteristics
Starting: from rest
Stopping: after attaining a full running speed
Electrical Characteristics —
Make (NO): Up to 6x rated motor current
Breaking (NC): 1x rated motor current

34

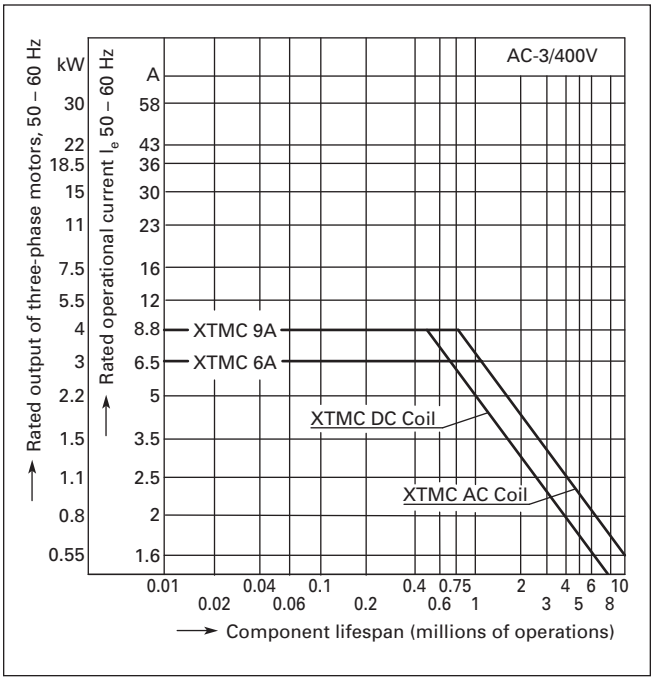

Figure 34-23. Normal Switching Duty — AC-3/400V

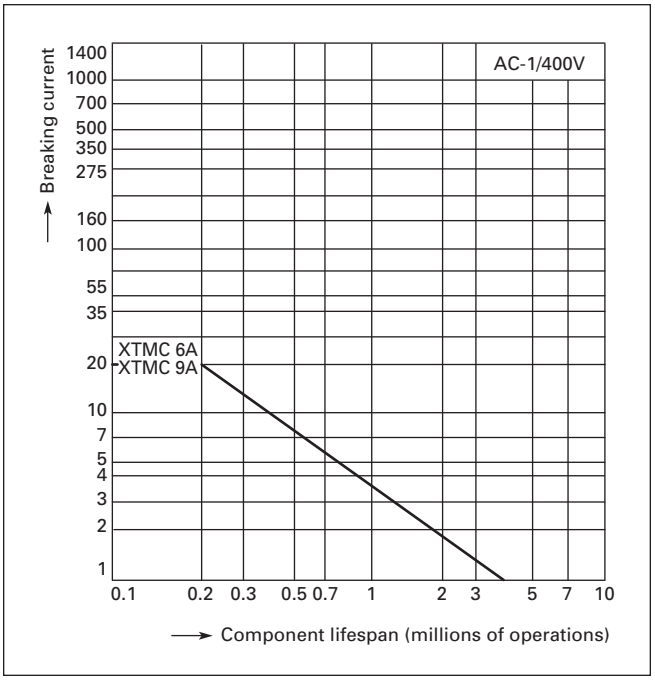

Figure 34-24. Switching Duty for Non-motor Loads, 3- & 4-Pole — AC-1/400V

Squirrel-cage motors
Operating characteristics
Jogging, plugging, reversing
Electrical Characteristics —
Make (NO): 6x rated motor current
Breaking (NC): 6x rated motor current

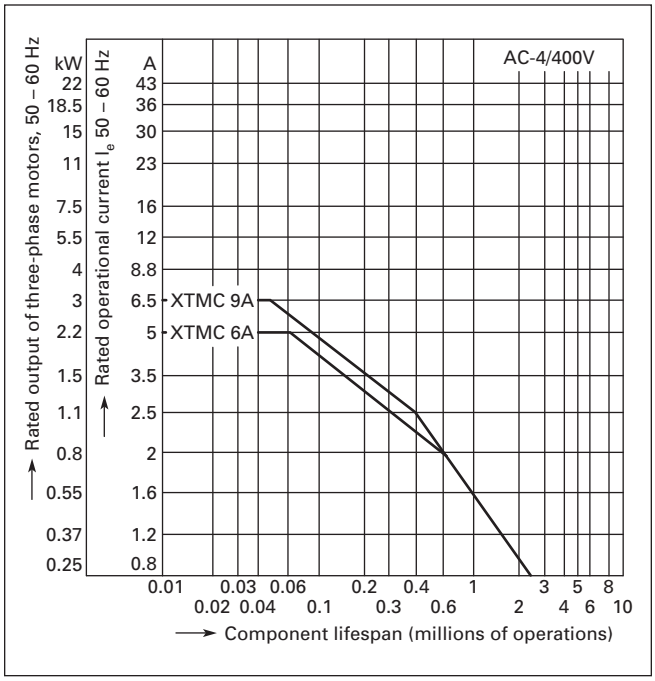

Figure 34-25. Extreme Switching Duty — AC-4/400V

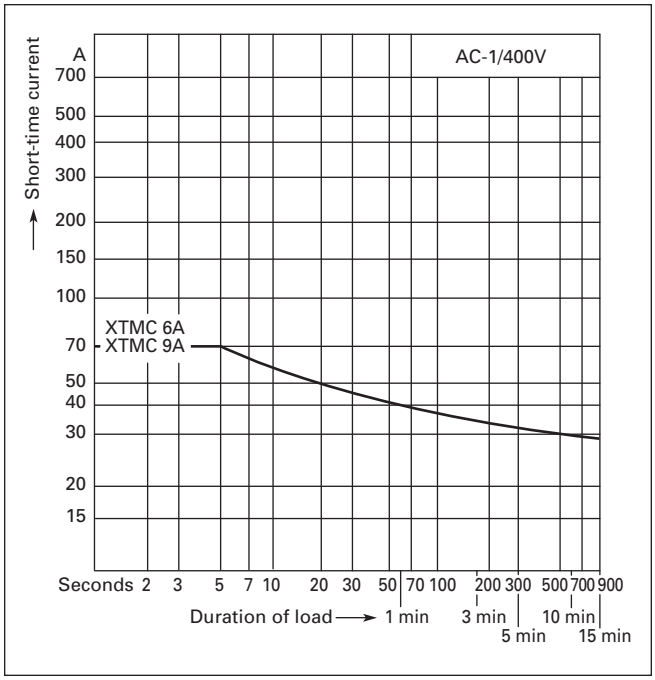

Figure 34-26. Short Time Loading, 3-Pole — AC-1/400V (time interval between two loading cycles: 15 minutes)

Dimensions

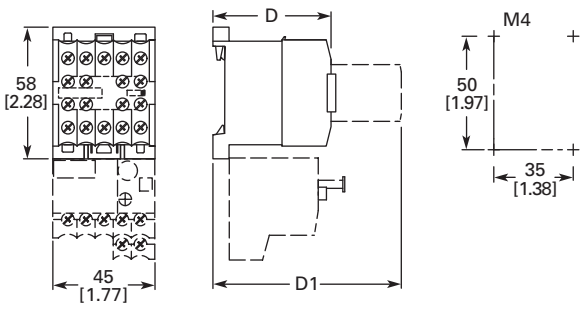

	XTMC	XTMCC
D	52 [2.05]	54 [2.13]
D1	83 [3.27]	86 [3.39]

Figure 34-27. Non-reversing Mini Contactor

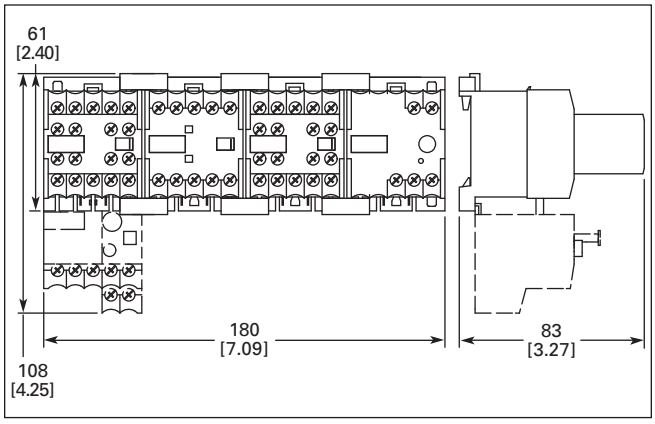

Figure 34-28. Star-Delta Starter Combinations

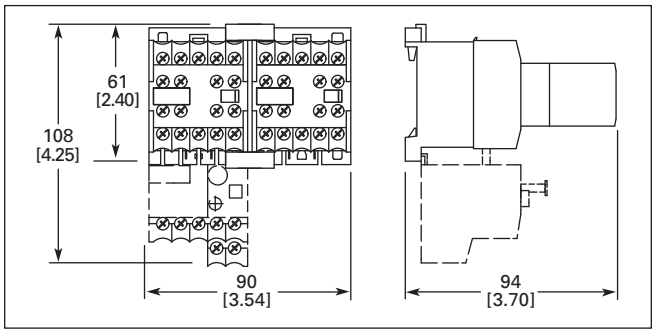

Figure 34-29. Reversing Mini Contactor

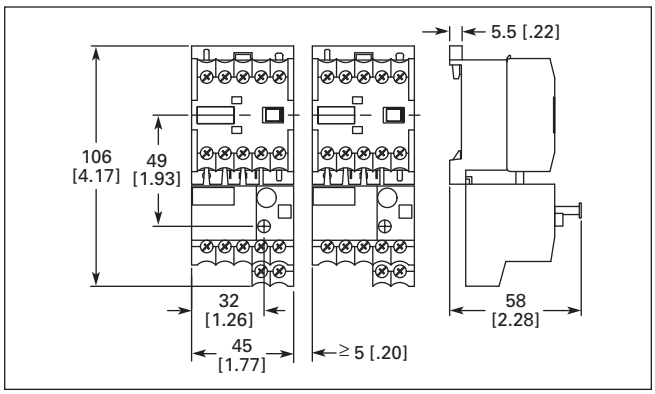

Figure 34-30. Non-reversing Mini Contactor with Overload Relay

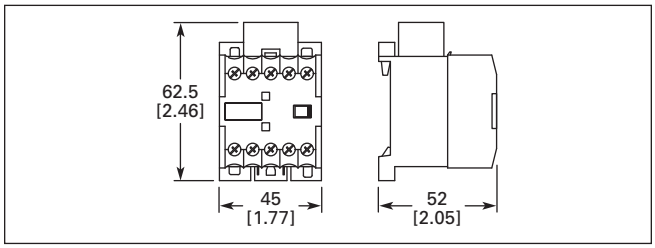

Figure 34-31. XTMCXRSA, XTMCXVSA Mini Suppressors — Approximate Dimensions in mm [in]

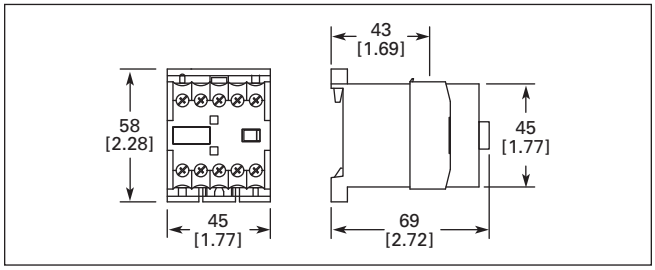

Figure 34-32. XTMCXTSA Mini Sealable Shroud — Approximate Dimensions in mm [in]

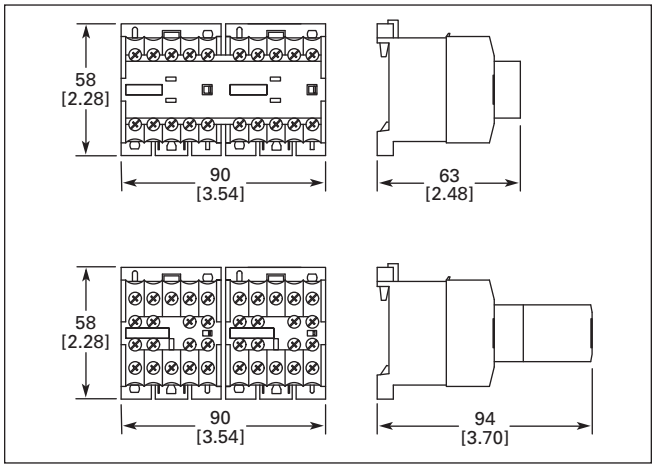

Figure 34-33. XTMCXML Mechanical Interlock — Approximate Dimensions in mm [in]

34

Contents

Description	*Page*
Contactors and Starters	
Catalog Number Selection	**34-33**
Product Selection	
Non-reversing Contactors	**34-34**
Reversing Contactors	**34-37**
Non-reversing Starters, Bimetallic Overload	**34-39**
Reversing Starters, Bimetallic Overload	**34-40**
Non-reversing Starters, C396 Electronic Overload	**34-42**
Reversing Starters, C396 Electronic Overload	**34-42**
Star-Delta (Wye-Delta) Starters	**34-44**
Accessories	**34-49**
Renewal Parts	**34-61**
Technical Data and Specifications	**34-62**
Dimensions	**34-91**
Reference Data	**34-210**



XT Family of Contactors

Contactors and Starters

Product Description

Eaton's new line of ***XT*** Contactors and Starters includes non-reversing and reversing contactors, overload relays and a variety of related accessories. Because ***XT*** meets IEC, UL, CSA, CCC and CE standards, it is the perfect product solution for IEC applications all over the world. The compact, space saving, and easy to install ***XT*** line of IEC contactors and starters is the efficient and effective solution for customer applications from 7A to 2000A.

Features and Benefits

- AC control from 12V to 600V 50/60 Hz
- DC control from 12V to 220V
- Available with screw or spring cage terminals
- Reversing or non-reversing contactors and starters
- AC-3 contactor ratings to 1000A and AC-1 contactor ratings to 2000A
- Non-reversing starters to 650A
- Panel or DIN rail mounting to 65A
- IP20 finger and back-of-hand proof
- Large ambient temperature range, -25 to 50°C [-13 to 122°F]
- AC and DC controlled contactors in the same compact frame
- Low power consumption DC coils
- Built-in NO or NC auxiliary contacts to 32A
- Plug-in accessories for reduced installation time
- Coil replacement on Frames C – N (18 – 820A)
- Contact replacement on Frames D – N (40 – 820A)
- Integrated suppressor 7 – 150A DC operated contactors and 185 – 2000A AC and DC operated contactors

Standards and Certifications

- IEC EN 60947
- CE Approved
- UL
- CSA
- CCC
- ATEX
- RoHS

Note: For Type 2 Coordination, see **Page 34-210**.

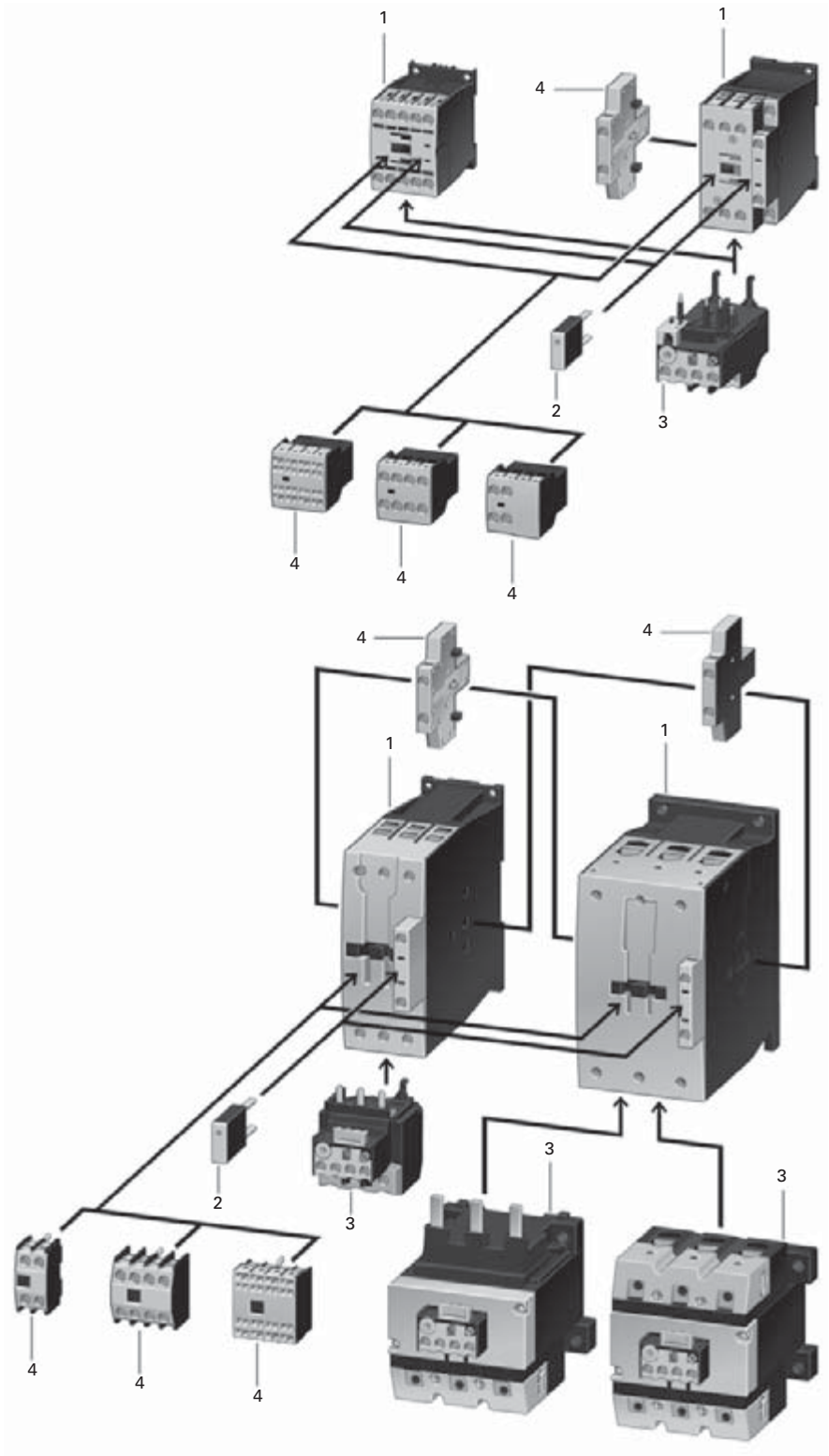

Table 34-46. Product Identification

No.	Description	Page
Contactor Up to 150A AC-3		
1	AC: ■ 12 – 600V, 50, 60, 50/60 Hz ■ 0.8 – 1.1 x U_c	**34-34**
	DC: ■ 12 – 250V ■ XTCE…B_ (7 – 15A): 0.8 – 1.1 x U_c ■ XTCE…C_ – XTCE…G_ (18 – 150A): 0.7 – 1.2 x U_c ■ 24V: 0.7 – 1.3 x U_c at 40°C without additional auxiliary contacts	
	Coils for Special Voltages	
	"Safe Isolation" to IEC 536 between coil and contacts	
Suppressors		
2	■ RC suppressor ■ Varistor suppressor ■ Free-wheel diode suppressor	**34-55**
Overload Relays		
3	■ Can be mounted directly ■ Separate mounting, possible ■ Protection of EEx e motors	**34-104**
Auxiliary Contact Modules		
4	■ 2-pole, plug-in type ■ 4-pole, plug-in type ■ Overlapping contacts ■ 2-pole, side mounting	**34-49**

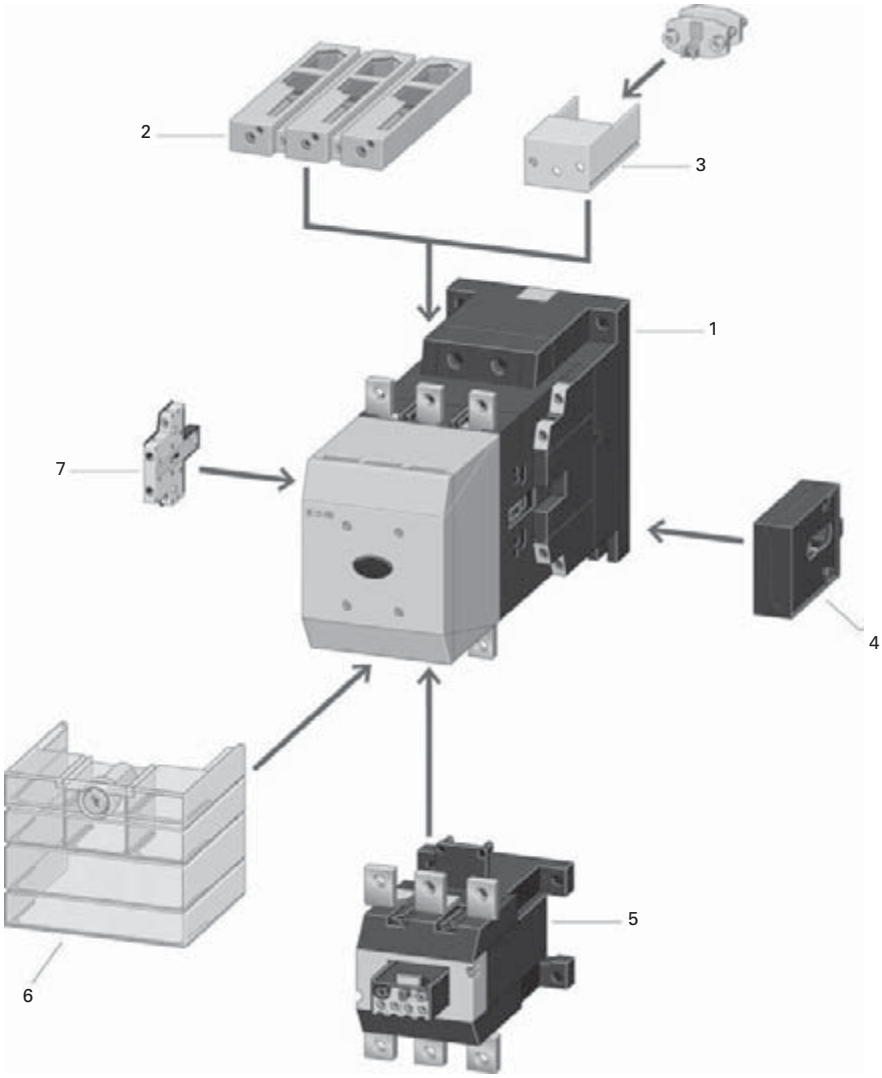

Table 34-47. XTCE185 – XTCEC20 Contactors

No.	Description	Page
XTCE Contactors for 185 – 2000A (AC-3)		
1	Multi-Voltage Coils: ■ 24 – 48V DC ■ 48 – 110V AC/DC ■ 110 – 250V AC/DC ■ 250 – 500V AC ■ 0.7 – 1.15 x U_c	**34-34**
	Actuation Options: ■ Directly ■ From the PLC ■ With low-consumption contact Minimized pick-up and sealing power.	
XTCS Contactors for 185 – 500A (AC-3)		
1	Control Voltages: ■ 110 – 120V 50/60 Hz ■ 220 – 240V 50/60 Hz Conventional operation.	**34-35**
Cable Terminal Block		
2	■ 1 or 2 conductors per phase ■ Round and flat conductor connectable ■ Finger-proof	**34-59**
Flat Strip Conductor Terminals		
3	■ 1 or 2 strips per phase ■ Control circuit terminal ■ Cover for fingerproofing	**34-59**
Mechanical Interlock		
4	■ Fits between contactors	**34-57**
Overload Relays		
5	■ Can be mounted directly ■ Separate mounting, possible ■ Protection of EEx e motors ■ PTB certificate	**34-104**
Terminal Shroud		
6	■ Finger-proof	**34-60**
Auxiliary Contact Modules		
7	■ 2-pole, side mounting	**34-49**

Catalog Number Selection

Table 34-48. *XT* IEC Contactors & Starters — Catalog Numbering System

XT CE C 007 B 01 AD P16

Designation

XT = ***XT*** Line of IEC Control

Type

CE = 3-Pole FVNR IEC Contactor
CS = 3-Pole FVNR S Series IEC Contactor
CF = 4-Pole FVNR IEC Contactor
CR = 3-Pole FVR IEC Contactor
CC = IEC Capacitor Contactor
AE = FVNR IEC Starter
AS = FVNR S-Series IEC Starter
AR = FVR IEC Starter

Terminations

Blank = Screw Terminals (6 – 65A); 5 mm (80 – 150A); No Lugs (185 – 2000A) Spring Cage Terminals
C = (6 – 32A); Spring Cage Coil Terminals Only (185 – 500A)

Current Ratings, AC-3	Frame Size Designation	Built-In Auxiliary Contact
007 = 7A **009** = 9A **012** = 12A **015** = 15A	**B** = 45 mm	**01** = 1NC **10** = 1NO
018 = 18A **025** = 25A **032** = 32A	**C** = 45 mm	
040 = 40A **050** = 50A **065** = 65A **072** = 72A	**D** = 55 mm	**00** = 0NO-0NC **S1** = 1NO-1NC Side-mount Auxiliary **S2** = 2NO-2NC Side-mount Auxiliary **11** = 1NO-1NC Top-mount Auxiliary
080 = 80A **095** = 95A	**F** = 90 mm	
115 = 115A **150** = 150A **170** = 170A	**G** = 90 mm	
185 = 185A **225** = 225A **250** = 250A	**L** = 140 mm	**22** = 2NO-2NC
300 = 300A **400** = 400A **500** = 500A **570** = 580A	**M** = 160 mm	
580 = 580A **650** = 650A **750** = 750A **820** = 820A **C10** = 1000A	**N** = 250 mm	
C14 = 1400A, AC-1	**P** = 260 mm	
C16 = 1600A, AC-3 **C20** = 2000A, AC-1	**R** = 515 mm	

XTAE, XTAS and XTAR Starters Only — Maximum Overload Relay

XTOB Maximum Overload Rating

Frame B
P16 = 0.1 – 0.16A
P24 = 0.16 – 0.24A
P40 = 0.24 – 0.4A
P60 = 0.4 – 0.6A
001 = 0.6 – 1A
1P6 = 1.0 – 1.6A
2P4 = 1.6 – 2.4A
004 = 2.4 – 4A
006 = 4 – 6A
010 = 6 – 10A
012 = 9 – 12A
016 = 12 – 16A

Frame C
P16 = 0.1 – 0.16A
P24 = 0.16 – 0.24A
P40 = 0.24 – 0.4A
P60 = 0.4 – 0.6A
001 = 0.6 – 1A
1P6 = 1.0 – 1.6A
2P4 = 1.6 – 2.4A
004 = 2.4 – 4A
006 = 4 – 6A
010 = 6 – 10A
016 = 10 – 16A
024 = 16 – 24A
032 = 24 – 32A

Frame D
010 = 6 – 10A
016 = 10 – 16A
024 = 16 – 24A
040 = 24 – 40A
057 = 40 – 57A
065 = 50 – 65A
075 = 65 – 75A

Frame F
035 = 25 – 35A
050 = 35 – 50A
070 = 50 – 70A
100 = 70 – 100A

Frame G
035 = 25 – 35A
050 = 35 – 50A
070 = 50 – 70A
100 = 70 – 100A
125 = 95 – 125A
150 = 120 – 150A
175 = 145 – 175A

Frame L
070 = 50 – 70A
100 = 70 – 100A
125 = 95 – 125A
160 = 120 – 160A
220 = 160 – 220A
250 = 200 – 250A

C396 Maximum Overload Rating

	Suffix
	Std. Class 5/10/20/30
Frame B	
0.1 – 0.5A =	**3EP05**
0.4 – 2.0A =	**3E002**
1 – 5A =	**3E005**
1.6 – 8A =	**3E008**
6.4 – 32 =	**3E032**
Frame C	
0.1 – 0.5A =	**3EP05**
0.4 – 2.0A =	**3E002**
1 – 5A =	**3E005**
1.6 – 8A =	**3E008**
6.4 – 32A =	**3E032**
Frame D	
6.4 – 32A =	**3E032**
9 – 45A =	**3E045**
15 – 75A =	**3E075**
Frame F	
22 – 110A =	**3E110**
Frame G	
30 – 150A =	**3E150**

Coil Codes

See **Table 34-58.**

Product Selection

Non-reversing Contactors



Frame B



Frame C



Frame D



Frame F



Frame F

Table 34-49. Full Voltage Non-reversing 3-Pole Contactors, Frame B – Frame G

UL/CSA Ratings								IEC Ratings						Aux. Contacts	Catalog Number — Screw Terminals ①②	Price U.S. $	
								AC-3 I_e (A)	AC-1 (40°C) $I_e = I_{th}$ (A)	Maximum kW Ratings AC-3						AC Coil	DC Coil
UL General Purpose Amp Rating	1-Phase hp Ratings			3-Phase hp Ratings						3-Phase Motors 50 – 60 Hz							
	115V	200V	230V	200V	230V	460V	575V			220/230V	380/400V	415V	660/690V				
Frame B																	
20	1/4	3/4	1	1-1/2	2	3	5	7	22	2.2	3	4	3.5	1NO	**XTCE007B10_**		
20	1/4	3/4	1	1-1/2	2	3	5	7	22	2.2	3	4	3.5	1NC	**XTCE007B01_**		
20	1/2	1	1-1/2	3	3	5	7-1/2	9	22	2.5	4	5.5	4.5	1NO	**XTCE009B10_**		
20	1/2	1	1-1/2	3	3	5	7-1/2	9	22	2.5	4	5.5	4.5	1NC	**XTCE009B01_**		
20	1	2	2	3	3	10 ③	10	12	22	3.5	5.5	7	6.5	1NO	**XTCE012B10_**		
20	1	2	2	3	3	10 ③	10	12	22	3.5	5.5	7	6.5	1NC	**XTCE012B01_**		
20	1	2	3	5	5	10 ③	10	15.5	22	4	7.5	8	7	1NO	**XTCE015B10_**		
20	1	2	3	5	5	10 ③	10	15.5	22	4	7.5	8	7	1NC	**XTCE015B01_**		
Frame C																	
40	2	2	3	5	5	10 ③	15	18	40	5	7.5	10	11	1NO	**XTCE018C10_**		
40	2	2	3	5	5	10 ③	15	18	40	5	7.5	10	11	1NC	**XTCE018C01_**		
40	2	3	5	7-1/2	10	15	20	25	45	7.5	11	14.5	14	1NO	**XTCE025C10_**		
40	2	3	5	7-1/2	10	15	20	25	45	7.5	11	14.5	14	1NC	**XTCE025C01_**		
40	3	5	5	10	10	20	25	32	45	10	15	18	17	1NO	**XTCE032C10_**		
40	3	5	5	10	10	20	25	32	45	10	15	18	17	1NC	**XTCE032C01_**		
Frame D																	
63	3	5	7-1/2	10	15	30	40	40	60	12.5	18.5	24	23	—	**XTCE040D00_**		
63	3	5	7-1/2	10	15	30	40	40	60	12.5	18.5	24	23	1NO-1NC	**XTCE040DS1_**		
80	3	7-1/2	10	15	20	40	50	50	80	15.5	22	30	30	—	**XTCE050D00_**		
80	3	7-1/2	10	15	20	40	50	50	80	15.5	22	30	30	1NO-1NC	**XTCE050DS1_**		
88	5	10	15	20	25	50	60	65	98	20	30	39	35	—	**XTCE065D00_**		
88	5	10	15	20	25	50	60	65	98	20	30	39	35	1NO-1NC	**XTCE065DS1_**		
88	5	10	15	20	25	50	60	72	98	22	37	41	35	—	**XTCE072D00_**		
88	5	10	15	20	25	50	60	72	98	22	37	41	35	1NO-1NC	**XTCE072DS1_**		
Frame F																	
125	7-1/2	15	15	25	30	60	75	80	110	25	37	48	63	—	**XTCE080F00_**		
125	7-1/2	15	15	25	30	60	75	80	110	25	37	48	63	1NO-1NC	**XTCE080FS1_**		
125	7-1/2	15	15	25	40	75	100	95	130	30	45	57	75	—	**XTCE095F00_**		
125	7-1/2	15	15	25	40	75	100	95	130	30	45	57	75	1NO-1NC	**XTCE095FS1_**		
Frame G																	
160	10	25	25	40	50	100	100	115	160	37	55	70	90	—	**XTCE115G00_**		
160	10	25	25	40	50	100	100	115	160	37	55	70	90	1NO-1NC	**XTCE115GS1_**		
180	10	25	30	40	60	125	125	150	190	48	75	91	96	—	**XTCE150G00_**		
180	10	25	30	40	60	125	125	150	190	48	75	91	96	1NO-1NC	**XTCE150GS1_**		
225 ④	10	25	30	40	60	125	125	170	275 ⑤	52	90	100	96	—	**XTCE170G00_**		
225 ④	10	25	30	40	60	125	125	170	275 ⑤	52	90	100	96	1NO-1NC	**XTCE170GS1_**		

① Underscore (_) indicates magnet coil suffix required. See **Table 34-58, Page 34-38**.

② For Spring Cage Terminals, insert **C** after the fourth digit of the Catalog Number. Example: XTCE**C**007B10A. For 7 – 12A XTCEC Contactors, the power, auxiliary and coil terminals are spring cage. For 18 – 32A XTCEC Contactors, the auxiliary and coil terminals are spring cage. For 40 – 150A XTCEC Contactors, the coil terminals only are spring cage.

③ For electrical life contactor application data, see **Table 34-51**, **Page 34-35**.

④ For 180 – 225A, use 2 x 3/0 AWG wire.

⑤ For 225 – 275A, use 2 x 70 mm^2 wire.

Notes:

The 7 – 32A XTCE Contactors have positively driven contacts between the integrated auxiliary contact and the auxiliary contact module as well as within the auxiliary contact modules.

The 40 – 65A XTCE Contactors have positively driven contacts within the auxiliary contact module. 6 auxiliary contacts are possible with a combination of side mounted and front mount auxiliary contacts.

DC operated contactors (Frames B – G, 7 – 150A) have a built-in suppressor circuit.

Frame B – C contactors with 1NC built-in auxiliary are mirror contacts (XTCE...B01_ – XTCE...C01_).

Contact Sequence (Circuit Symbols) ..... **Page 34-35**
Coil Voltage Chart ..... **Page 34-38**
Accessories ..... **Page 34-49**
Dimensions ..... **Page 34-91**
Overload Relays ..... **Page 34-104**
Discount Symbol **1CD7**

Non-reversing Contactors


Frame L


Frame M


Frame N


Frame P


Frame R

Table 34-50. Full Voltage Non-reversing 3-Pole Contactors, Frame L – Frame R

UL/CSA Ratings					IEC Ratings							Aux. Contacts	Catalog Number ①	Price U.S. $	
					AC-3 I_e (A)	AC-1 (40°C) $I_e = I_{th}$ (A)	Maximum kW Ratings AC-3								
UL General Purpose Amp Rating	3-Phase hp Ratings						3-Phase Motors 50 – 60 Hz							AC Coil	DC Coil
	200V	230V	460V	575V			220/230V	380/400V	415V	660/690V ②	1000V ②				
Frame L — Standard Coil (110/120V, 230/240V AC Coil Only)															
225	50	60	125	150	185	337	55	90	110	175	108	2NO-2NC	**XTCS185L22_**		
250	60	75	150	200	225	386	70	110	132	215	108	2NO-2NC	**XTCS225L22_**		
300	75	100	200	250	250	429	75	132	148	240	108	2NO-2NC	**XTCS250L22_**		
Frame L — Electronic Coil															
225	50	60	125	150	185	337	55	90	110	175	108	2NO-2NC	**XTCE185L22_**		
250	60	75	150	200	225	386	70	110	132	215	108	2NO-2NC	**XTCE225L22_**		
300	75	100	200	250	250	429	75	132	148	240	108	2NO-2NC	**XTCE250L22_**		
Frame M — Standard Coil (110/120V, 230/240V AC Coil Only)															
350	100	125	250	300	300	490	90	160	180	286	132	2NO-2NC	**XTCS300M22_**		
450	125	150	300	400	400	612	125	200	240	344	132	2NO-2NC	**XTCS400M22_**		
550	150	200	400	500	500	857	155	250	300	344	132	2NO-2NC	**XTCS500M22_**		
550	150	200	400	500	580	980	155	315	350	344	132	2NO-2NC	**XTCS570M22_**		
Frame M — Electronic Coil															
350	100	125	250	300	300	490	90	160	180	286	132	2NO-2NC	**XTCE300M22_**		
450	125	150	300	400	400	612	125	200	240	344	132	2NO-2NC	**XTCE400M22_**		
550	150	200	400	500	500	857	155	250	300	344	132	2NO-2NC	**XTCE500M22_**		
550	150	200	400	500	580	980	155	315	350	344	132	2NO-2NC	**XTCE570M22_**		
Frame N — Electronic Coil															
630	200	200	400	600	580	980	185	315	348	560	600	2NO-2NC	**XTCE580N22_** ③		
700	200	250	500	600	650	1041	205	355	390	630	600	2NO-2NC	**XTCE650N22_** ③		
800	250	300	600	700	750	1102	240	400	455	720	800	2NO-2NC	**XTCE750N22_** ③		
850	290	350	700	860	820	1225	260	450	500	750	800	2NO-2NC	**XTCE820N22_** ③		
1100	350	420	850	980	1000	1225	315	560	610	1000	1000	2NO-2NC	**XTCEC10N22_** ③		
Frame P — Electronic Coil															
1400	—	—	—	—	—	1714	—	—	—	—	—	2NO-2NC	**XTCEC14P22_** ③		
Frame R — Electronic Coil															
1600	560	640	1200	1300	1600	2200	500	900	900	1600	1700	2NO-2NC	**XTCEC16R22_** ③		
2000	—	—	—	—	—	2450	—	—	—	—	—	2NO-2NC	**XTCEC20R22_** ③		

① Underscore (_) indicates magnet coil suffix required. See **Table 34-58, Page 34-38**. Terminals not included. See **Page 34-59** for terminal accessories.
② For 185 – 500A Contactors at 660/690V or 1000V: Do not reverse directly.
③ When operating the 580 – 2000A XTCE contactors with frequency inverters, the suppressor on the load side must be removed. The load side suppressor must also be removed when performing a high-voltage test — see Pub51204, Pub51209.

Table 34-51. Contactor Application Data ④

Catalog Prefix	Electrical Life (Operations) for 10hp, 480V (14.2A) Applications
XTCE012B	1 million
XTCE015B	1.2 million
XTCE018C	2 million

④ See **Page 34-88** for Electrical Life Curves.

Note:

AC and DC operated contactors have a built-in suppressor circuit (Frames L – R, 185 – 2000A).

Table 34-52. Full Voltage Non-reversing 3-Pole Contactors — Contact Sequence (Circuit Symbols) — Standard Offering

Contactor Frame	Auxiliary Contacts	Contact Sequence
B – C	1NO	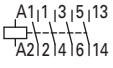
B – C	1NC	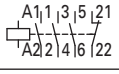
D – G	—	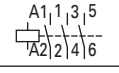
L – R	2NO-2NC	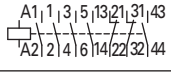

Coil Voltage Chart ..... **Page 34-38**
Accessories ..... **Page 34-49**
Dimensions ..... **Page 34-91**
Overload Relays ..... **Page 34-104**
Discount Symbol **1CD7**

34

Table 34-53. Full Voltage 4-Pole Non-reversing Contactors with Screw Terminals

Maximum UL/CSA Motor Rating						I_e (A)		Maximum kW Ratings AC-3				Aux. Contacts	Contact Sequence	Catalog Number ①	Price U.S. $
1-Phase hp Ratings		3-Phase hp Ratings				AC-3	AC-1 (40°C)	3-Phase Motors 50 – 60 Hz							
115V	230V	200V	230V	460V	575V			220/ 230V	380/ 400V	415V	660/ 690V				
1	2	3	3	10	10	12	22	3.5	5.5	7	6.5	—	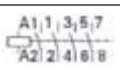	**XTCF020B00_**	
—	—	7.5	7.5	10	15	18	32	5	7.5	10	11	1NO		**XTCF032C10_**	
—	—	7.5	10	15	20	25	45	7.5	11	14.5	14	1NO		**XTCF045C10_**	
—	—	10	15	30	40	40	63	12.5	18.5	24	23	—	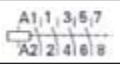	**XTCF063D00_**	
—	—	15	20	40	50	50	80	15.5	22	30	30	—		**XTCF080D00_**	
—	—	25	30	60	75	80	125	25	37	48	63	—	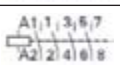	**XTCF125G00_**	
—	—	25	40	75	100	95	160	30	45	57	75	—		**XTCF160G00_**	
—	—	40	50	100	125	115	200	37	55	70	90	—		**XTCF200G00_**	

① Underscore (_) indicates magnet coil suffix required. See **Table 34-59**.

Table 34-54. Switching of DC Currents
(when necessary cable to be supplied by customer)

Description	1-Pole	2-Pole
XTCF020B – XTCF200G >60V DC	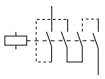	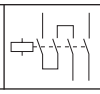

Table 34-55. Controlling XTCS and XTCE Contactors Frame L – R (185 – 2000A)

Description	XTCS185L – XTCS500M	XTCEC16R, XTCEC20R	XTCE185L – XTCEC14P
Conventional A1/A2 are applied to voltage in the usual manner.	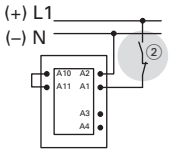	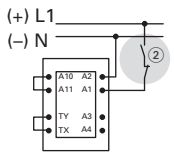	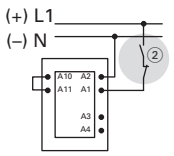
Direct from the PLC A 24V output from the PLC can be connected directly to connections A3/A4. 	—	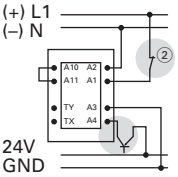	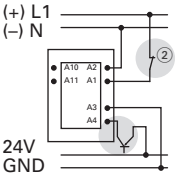
From Low-Consumption Command Devices Command devices which can only be subject to minimal loads such as circuit board relays, control circuit devices or position switches can be connected directly to A10/A11.	—	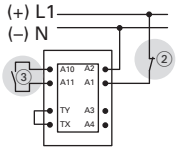	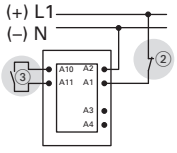

② Standstill in an emergency (Emergency-Stop).
③ Command device connection,

Discount Symbol **1CD7**

Reversing Contactors



Frame B



Frame C



Frame D

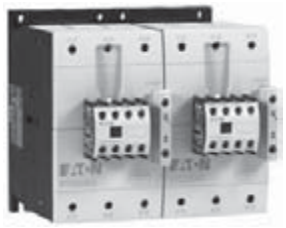

Frame F and G

Table 34-56. Full Voltage Reversing Contactors with Screw Terminals

Maximum 3-Phase Motor Rating						I_e (A)	Maximum kW Ratings AC-3				Spare Auxiliary Contacts		Catalog Number ①	Price U.S. $	
1-Phase hp Ratings		3-Phase hp Ratings				AC-3	3-Phase Motors 50 – 60 Hz				K1M	K2M		AC Coil	DC Coil
115V	230V	200V	230V	460V	575V		220/ 230V	380/ 400V	415V	660/ 690V					
Frame B															
1/4	1	1-1/2	2	3	5	7	2.2	3	4	3.5	63 64	63 64	**XTCR007B21_**		
1/2	1-1/2	2	3	5	7-1/2	9	2.5	4	5.5	4.5	63 64	63 64	**XTCR009B21_**		
1/2	2	3	3	7-1/2	10	12	3.5	5.5	7	6.5	63 64	63 64	**XTCR012B21_**		
Frame C															
2	3	5	5	10	15	18	5	7.5	8	11	63 64	63 64	**XTCR018C21_**		
2	5	7-1/2	7-1/2	15	20	25	7.5	11	14.5	14	63 64	63 64	**XTCR025C21_**		
3	5	10	10	20	25	32	10	15	18	17	63 64	63 64	**XTCR032C21_**		
Frame D															
3	7-1/2	10	15	30	40	40	12.5	18.5	24	23	—	—	**XTCR040D11_**		
3	10	15	20	40	50	50	15.5	22	30	30	—	—	**XTCR050D11_**		
5	15	20	25	50	60	65	20	30	39	35	—	—	**XTCR065D11_**		
Frame F															
7-1/2	15	25	30	60	75	80	25	37	48	63	—	—	**XTCR080F11_**		
7-1/2	15	25	40	75	100	95	30	45	57	75	—	—	**XTCR095F11_**		
Frame G															
10	25	40	50	100	100	115	37	55	70	90	—	—	**XTCR115G11_**		
15	30	40	60	100	100	150	48	75	91	96	—	—	**XTCR150G11_**		

① Underscore (_) indicates magnet coil suffix required. See **Table 34-58**.

Table 34-57. XTCR Reversing Contactor Components

Qty	Frame	B	C	D	F	G
2	Contactor	XTCE...B01_	XTCE...B01_	XTCE...D00_	XTCE...F00_	XTCE...G00_
2	Auxiliary Contact	XTCEXFAC20	XTCEXFAC20	XTCEXFBG11	XTCEXFBG11	XTCEXFBG11
1	Mechanical Interlock	XTCEXMLB	XTCEXMLC	XTCEXMLD	XTCEXMLG	XTCEXMLG
1	Reversing Link Kit	XTCEXRLB	XTCEXRLC	XTCEXRLD	XTCEXRLG	XTCEXRLG

Coil Voltage Chart ..... **Page 34-38**
Accessories ..... **Page 34-49**
Dimensions ..... **Page 34-91**
Overload Relays ..... **Page 34-104**
Discount Symbol **1CD7**

Table 34-58. Magnet Coil Suffix

Coil Voltage	Suffix Code
Frame A – B	
110V 50 Hz, 120V 60 Hz	**A**
220V 50 Hz, 240V 60 Hz	**B**
230V 50 Hz	**F**
24V 50/60 Hz	**T**
24V DC	**TD**
415V 50 Hz, 480V 60 Hz	**C**
550V 50 Hz, 600V 60 Hz	**D**
208V 60 Hz	**E**
190V 50 Hz, 220V 60 Hz	**G**
240V 50 Hz, 277V 60 Hz	**H**
380V 50 Hz, 440V 60 Hz	**L**
400V 50 Hz	**N**
380V 60 Hz	**P**
12V 50/60 Hz	**R**
24V 50 Hz	**U**
42V 50 Hz, 48V 60 Hz	**W**
48V 50 Hz	**Y**
120V DC	**AD**
220V DC	**BD**
12V DC	**RD**
48V DC	**WD**

Coil Voltage	Suffix Code
Frame C – F	
110V 50 Hz, 120V 60 Hz	**A**
220V 50 Hz, 240V 60 Hz	**B**
230V 50 Hz	**F**
24V 50/60 Hz	**T**
24 – 27V DC	**TD**
415V 50 Hz, 480V 60 Hz	**C**
550V 50 Hz, 600V 60 Hz	**D**
208V 60 Hz	**E**
190V 50 Hz, 220V 60 Hz	**G**
240V 50 Hz, 277V 60 Hz	**H**
380V 50 Hz, 440V 60 Hz	**L**
400V 50 Hz	**N**
380V 60 Hz	**P**
12V 50/60 Hz	**R**
24V 50 Hz	**U**
42V 50 Hz, 48V 60 Hz	**W**
48V 50 Hz	**Y**
110 – 130V DC	**AD**
200 – 240V DC	**BD**
12 – 14V DC	**RD** ①
48 – 60V DC	**WD**

Coil Voltage	Suffix Code
Frame G	
100 – 120V 50/60 Hz	**A**
190 – 240V 50/60 Hz	**B**
24V 50/60 Hz	**T**
24 – 27V DC	**TD**
480 – 500V 50/60 Hz	**C**
380 – 440V 50/60 Hz	**L**
42 – 48V 50/60 Hz	**W**
110 – 130V DC	**AD**
200 – 240V DC	**BD**
48 – 60V DC	**WD**
Frame L – N	
110 – 250V 40 – 60 Hz/DC	**A**
250 – 500V 40 – 60 Hz	**C**
48 – 110V 40 – 60 Hz/DC	**Y**
24 – 48V DC	**TD** ②
Frame L – M, S-Series	
110 – 120V 50/60 Hz	**A**
220 – 240V 50/60 Hz	**B**
Frame P – R	
220 – 250V 50 – 60 Hz/DC	**B**

① Frame C – D only.
② Frame L – M only.

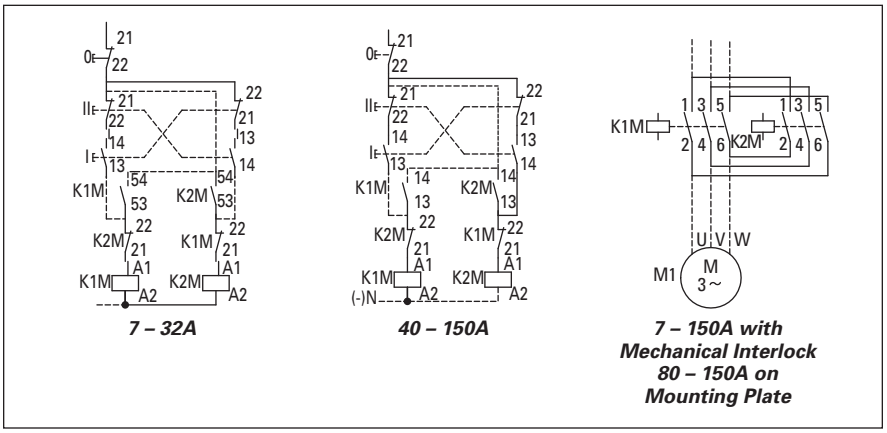

7 – 32A

40 – 150A

7 – 150A with Mechanical Interlock 80 – 150A on Mounting Plate

Figure 34-34. 7 – 150A XTCR Reversing Contactor Wiring Diagram

Accessories ..... **Page 34-49**
Dimensions ..... **Page 34-91**
Overload Relays ..... **Page 34-104**

Non-reversing Starters, Bimetallic Overload


Frame B


Frame C


Frame D


Frame F/G


Frame L

Table 34-59. Full Voltage Non-reversing 3-Pole Starters with Bimetallic Overload

Maximum 3-Phase Motor Rating						I_e (A)		Maximum kW Ratings AC-3					Auxiliary Contacts	Catalog Number ①②	Price U.S. $	
1-Phase hp Ratings		3-Phase hp Ratings				AC-3	AC-1	3-Phase Motors 50 – 60 Hz							AC Coil	DC Coil
115V	230V	200V	230V	460V	575V			220/ 230V	380/ 400V	415V	660/ 690V	1000V				
Frame B																
1/4	1	1-1/2	2	3	5	7	20	2.2	3	4	3.5	—	1NO	**XTAE007B10_ _**		
1/4	1	1-1/2	2	3	5	7	20	2.2	3	4	3.5	—	1NC	**XTAE007B01_ _**		
1/2	1-1/2	3	3	5	7-1/2	9	20	2.5	4	5.5	4.5	—	1NO	**XTAE009B10_ _**		
1/2	1-1/2	3	3	5	7-1/2	9	20	2.5	4	5.5	4.5	—	1NC	**XTAE009B01_ _**		
1	2	3	3	10 ③	10	12	20	3.5	5.5	7	6.5	—	1NO	**XTAE012B10_ _**		
1	2	3	3	10 ③	10	12	20	3.5	5.5	7	6.5	—	1NC	**XTAE012B01_ _**		
1	3	5	5	10 ③	10	15.5	20	4	7.5	8	7	—	1NO	**XTAE015B10_ _**		
1	3	5	5	10 ③	10	15.5	20	4	7.5	8	7	—	1NC	**XTAE015B01_ _**		
Frame C																
2	3	5	5	10 ③	15	18	35	5	7.5	10	11	—	1NO	**XTAE018C10_ _**		
2	3	5	5	10 ③	15	18	35	5	7.5	10	11	—	1NC	**XTAE018C01_ _**		
2	5	7-1/2	7-1/2	15	20	25	40	7.5	11	14.5	14	—	1NO	**XTAE025C10_ _**		
2	5	7-1/2	7-1/2	15	20	25	40	7.5	11	14.5	14	—	1NC	**XTAE025C01_ _**		
3	5	10	10	20	25	32	40	10	15	18	17	—	1NO	**XTAE032C10_ _**		
3	5	10	10	20	25	32	40	10	15	18	17	—	1NC	**XTAE032C01_ _**		
Frame D																
3	7-1/2	10	15	30	40	40	50	12.5	18.5	24	23	—	—	**XTAE040D00_ _**		
3	10	15	20	40	50	50	60	15.5	22	30	30	—	—	**XTAE050D00_ _**		
5	15	20	25	50	60	65	72	20	30	39	35	—	—	**XTAE065D00_ _**		
Frame F																
7-1/2	15	25	30	60	75	80	110	25	37	48	63	—	—	**XTAE080F00_ _**		
7-1/2	15	25	40	75	100	95	110	30	45	57	75	—	—	**XTAE095F00_ _**		
Frame G																
10	25	40	50	100	125	115	160	37	55	70	105	—	—	**XTAE115G00_ _**		
15	30	40	60	125	125	150	160	48	75	91	125	—	—	**XTAE150G00_ _**		
Frame L																
—	—	50	60	125	150	185	275	55	90	110	175	108	2NO-2NC	**XTAE185L22_ _**		
—	—	60	75	150	200	225	315	70	110	132	215	108	2NO-2NC	**XTAE225L22_ _**		
—	—	75	100	200	250	250	350	75	132	148	240	108	2NO-2NC	**XTAE250L22_ _**		

① Underscore (_) indicates magnet coil suffix required. See **Table 34-62**.
② Underscore (_) indicates overload relay suffix required. See **Table 34-64**.
③ For electrical life contactor application data see **Table 34-63**.

Coil Voltage Chart ..... **Page 34-40**
Accessories ..... **Page 34-49**
Dimensions ..... **Page 34-91**
Overload Relays ..... **Page 34-104**
Discount Symbol **1CD7**

34

Table 34-60. Full Voltage Non-reversing S-Series 3-Pole Starters with Bimetallic Overload

Maximum 3-Phase Motor Rating						I_e (A)		Maximum kW Ratings AC-3					Catalog Number ①②	Price U.S. $	
1-Phase hp Ratings		3-Phase hp Ratings				AC-3	AC-1	3-Phase Motors 50 – 60 Hz						AC Coil	DC Coil
115V	230V	200V	230V	460V	575V			220/230V	380/400V	415V	660/690V	1000V			
Frame L															
—	—	50	60	125	150	185	337	55	90	110	175	108	**XTAS185L22_ _**		
—	—	60	75	150	200	225	386	70	110	132	215	108	**XTAS225L22_ _**		
—	—	75	100	200	250	250	429	75	132	148	240	108	**XTAS250L22_ _**		

① Underscore (_) indicates magnet coil suffix required. See **Table 34-62**.
② Underscore (_) indicates overload relay suffix required. See **Table 34-64**.

Reversing Starters, Bimetallic Overload

Table 34-61. Full Voltage Reversing Starters with Screw Terminals and Bimetallic Overload

Maximum 3-Phase Motor Rating						I_e (A)	Maximum kW Ratings AC-3				Catalog Number ③④	Price U.S. $	
1-Phase hp Ratings		3-Phase hp Ratings				AC-3	3-Phase Motors 50 – 60 Hz					AC Coil	DC Coil
115V	230V	200V	230V	460V	575V		220/230V	380/400V	415V	660/690V			
Frame B													
1/4	1	1-1/2	2	3	5	7	2.2	3	4	3.5	**XTAR007B21_ _**		
1/2	1-1/2	3	3	5	7-1/2	9	2.5	4	5.5	4.5	**XTAR009B21_ _**		
1	2	3	3	10	10	12	3.5	5.5	7	6.5	**XTAR012B21_ _**		
Frame C													
2	3	5	5	10	15	18	5	7.5	8	11	**XTAR018C21_ _**		
2	5	7-1/2	7-1/2	15	20	25	7.5	11	14.5	14	**XTAR025C21_ _**		
3	5	10	10	20	25	32	10	15	18	17	**XTAR032C21_ _**		
Frame D													
3	7-1/2	10	15	30	40	40	12.5	18.5	24	23	**XTAR040D11_ _**		
3	10	15	20	40	50	50	15.5	22	30	30	**XTAR050D11_ _**		
5	15	20	25	50	60	65	20	30	39	35	**XTAR065D11_ _**		

③ Underscore (_) indicates magnet coil suffix required. See **Table 34-62**.
④ Underscore (_) indicates overload relay suffix required. See **Table 34-64**.

Table 34-62. Magnet Coil Suffix

Coil Voltage	Suffix Code
Frame A – B	
110V 50 Hz, 120V 60 Hz	**A**
220V 50 Hz, 240V 60 Hz	**B**
230V 50 Hz	**F**
24V 50/60 Hz	**T**
24V DC	**TD**
415V 50 Hz, 480V 60 Hz	**C**
550V 50 Hz, 600V 60 Hz	**D**
208V 60 Hz	**E**
190V 50 Hz, 220V 60 Hz	**G**
240V 50 Hz, 277V 60 Hz	**H**
380V 50 Hz, 440V 60 Hz	**L**
400V 50 Hz	**N**
380V 60 Hz	**P**
12V 50/60 Hz	**R**
24V 50 Hz	**U**
42V 50 Hz, 48V 60 Hz	**W**
48V 50 Hz	**Y**
120V DC	**AD**
220V DC	**BD**
12V DC	**RD**
48V DC	**WD**

Coil Voltage	Suffix Code
Frame C – F	
110V 50 Hz, 120V 60 Hz	**A**
220V 50 Hz, 240V 60 Hz	**B**
230V 50 Hz	**F**
24V 50/60 Hz	**T**
24 – 27V DC	**TD**
415V 50 Hz, 480V 60 Hz	**C**
550V 50 Hz, 600V 60 Hz	**D**
208V 60 Hz	**E**
190V 50 Hz, 220V 60 Hz	**G**
240V 50 Hz, 277V 60 Hz	**H**
380V 50 Hz, 440V 60 Hz	**L**
400V 50 Hz	**N**
380V 60 Hz	**P**
12V 50/60 Hz	**R**
24V 50 Hz	**U**
42V 50 Hz, 48V 60 Hz	**W**
48V 50 Hz	**Y**
110 – 130V DC	**AD**
200 – 240V DC	**BD**
12 – 14V DC	**RD** ⑥
48 – 60V DC	**WD**

Coil Voltage	Suffix Code
Frame G	
100 – 120V 50/60 Hz	**A**
190 – 240V 50/60 Hz	**B**
24V 50/60 Hz	**T**
24 – 27V DC	**TD**
480 – 500V 50/60 Hz	**C**
380 – 440V 50/60 Hz	**L**
42 – 48V 50/60 Hz	**W**
110 – 130V DC	**AD**
200 – 240V DC	**BD**
48 – 60V DC	**WD**
Frame L – N	
110 – 250V 40 – 60 Hz/DC	**A**
250 – 500V 40 – 60 Hz	**C**
48 – 110V 40 – 60 Hz/DC	**Y**
24 – 48V DC	**TD** ⑦
Frame L – N, S-Series	
110 – 120V 50/60 Hz	**A**
220 – 240V 50/60 Hz	**B**
Frame P – R	
220 – 250V 50 – 60 Hz/DC	**B**

⑥ Frame C – D only.
⑦ Frame L – M only.

Table 34-63. Starter Application Data ⑤

Catalog Prefix	AC-3	Electrical Life (Operations)
XTAE012B	12A	1 million
XTAE015B	15A	1.2 million
XTAE018C	18A	2 million

⑤ See **Page 34-88** for Electrical Life Curves.

Accessories ..... **Page 34-49**
Dimensions ..... **Page 34-91**
Overload Relays ..... **Page 34-104**
Discount Symbol **1CD7**

Table 34-64. XTOB and XTOT Overload Relay Suffix

Motor Full Load Amperes	Suffix Code	For Use with Contactor Amp Range	Overload Relay Catalog Number
Frame B			
0.1 – 0.16	**P16**	7 – 15A	**XTOBP16BC1**
0.16 – 0.24	**P24**	7 – 15A	**XTOBP24BC1**
0.24 – 0.4	**P40**	7 – 15A	**XTOBP40BC1**
0.4 – 0.6	**P60**	7 – 15A	**XTOBP60BC1**
0.6 – 1	**001**	7 – 15A	**XTOB001BC1**
1 – 1.6	**1P6**	7 – 15A	**XTOB1P6BC1**
1.6 – 2.4	**2P4**	7 – 15A	**XTOB2P4BC1**
2.4 – 4	**004**	7 – 15A	**XTOB004BC1**
4 – 6	**006**	7 – 15A	**XTOB006BC1**
6 – 10	**010**	7 – 15A	**XTOB010BC1**
9 – 12	**012**	9 – 15A	**XTOB012BC1**
12 – 16	**016**	12 – 15A	**XTOB016BC1**
Frame C			
0.1 – 0.16	**P16**	18 – 32A	**XTOBP16CC1**
0.16 – 0.24	**P24**	18 – 32A	**XTOBP24CC1**
0.24 – 0.4	**P40**	18 – 32A	**XTOBP40CC1**
0.4 – 0.6	**P60**	18 – 32A	**XTOBP60CC1**
0.6 – 1	**001**	18 – 32A	**XTOB001CC1**
1 – 1.6	**1P6**	18 – 32A	**XTOB1P6CC1**
1.6 – 2.4	**2P4**	18 – 32A	**XTOB2P4CC1**
2.4 – 4	**004**	18 – 32A	**XTOB004CC1**
4 – 6	**006**	18 – 32A	**XTOB006CC1**
6 – 10	**010**	18 – 32A	**XTOB010CC1**
10 – 16	**016**	18 – 32A	**XTOB016CC1**
16 – 24	**024**	18 – 32A	**XTOB024CC1**
24 – 32	**032**	25 – 32A	**XTOB032CC1**

Motor Full Load Amperes	Suffix Code	For Use with Contactor Amp Range	Overload Relay Catalog Number
Frame D			
6 – 10	**010**	40 – 72A	**XTOB010DC1**
10 – 16	**016**	40 – 72A	**XTOB016DC1**
16 – 24	**024**	40 – 72A	**XTOB024DC1**
24 – 40	**040**	40 – 72A	**XTOB040DC1**
40 – 57	**057**	50 – 72A	**XTOB057DC1**
50 – 65	**065**	65 – 72A	**XTOB065DC1**
65 – 75	**075**	65 – 72A	**XTOB075DC1**
Frame F			
25 – 35	**035**	80 – 95A	**XTOB055GC1** ①
35 – 50	**050**	80 – 95A	**XTOB050GC1** ①
50 – 70	**070**	80 – 95A	**XTOB070GC1** ①
70 – 100	**100**	80 – 95A	**XTOB100GC1** ①
Frame G			
25 – 35	**035**	115 – 170A	**XTOB055GC1** ①
35 – 50	**050**	115 – 170A	**XTOB050GC1** ①
50 – 70	**070**	115 – 170A	**XTOB070GC1** ①
70 – 100	**100**	115 – 170A	**XTOB100GC1** ①
95 – 125	**125**	115 – 170A	**XTOB125GC1** ①
120 – 150	**150**	150 – 170A	**XTOB150GC1** ①
145 – 175	**175**	150 – 170A	**XTOB175GC1** ①
Frame L			
50 – 70	**070**	185 – 250A	**XTOB070LC1**
70 – 100	**100**	185 – 250A	**XTOB100LC1**
95 – 125	**125**	185 – 250A	**XTOB125LC1**
120 – 160	**160**	185 – 250A	**XTOB160LC1**
160 – 220	**220**	185 – 250A	**XTOB220LC1**
200 – 250	**250**	225 – 250A	**XTOB250LC1**

① Catalog Number refers to direct mount overload relay. Add an **S** to the end of the Catalog Number for separate mount.

34

Overload Relays ..... **Page 34-104**

34

Non-reversing Starters, C396 Electronic Overload



Frame C XT Starter with C396 Electronic Overload

Table 34-65. Full Voltage Non-reversing 3-Pole Starters with C396 Electronic Overload

Maximum 3-Phase Motor Rating						I_e (A)		Maximum kW Ratings AC-3					Auxiliary Contacts	Catalog Number ①②	Price U.S. $	
1-Phase hp Ratings		3-Phase hp Ratings				AC-3	AC-1	3-Phase Motors 50 – 60 Hz							Standard	
115V	230V	200V	230V	460V	575V			220/ 230V	380/ 400V	415V	660/ 690V	1000V			AC Coil	DC Coil
Frame B																
1/4	1	1-1/2	2	3	5	7	20	2.2	3	4	3.5	—	1NO	**XTAE007B10_ _**		
1/4	1	1-1/2	2	3	5	7	20	2.2	3	4	3.5	—	1NC	**XTAE007B01_ _**		
1/2	1-1/2	3	3	5	7-1/2	9	20	2.5	4	5.5	4.5	—	1NO	**XTAE009B10_ _**		
1/2	1-1/2	3	3	5	7-1/2	9	20	2.5	4	5.5	4.5	—	1NC	**XTAE009B01_ _**		
1	2	3	3	10 ③	10	12	20	3.5	5.5	7	6.5	—	1NO	**XTAE012B10_ _**		
1	2	3	3	10 ③	10	12	20	3.5	5.5	7	6.5	—	1NC	**XTAE012B01_ _**		
1	3	5	5	10 ③	10	15.5	20	4	7.5	8	7	—	1NO	**XTAE015B10_ _**		
1	3	5	5	10 ③	10	15.5	20	4	7.5	8	7	—	1NC	**XTAE015B01_ _**		
Frame C																
2	3	5	5	10 ③	15	18	35	5	7.5	10	11	—	1NO	**XTAE018C10_ _**		
2	3	5	5	10 ③	15	18	35	5	7.5	10	11	—	1NC	**XTAE018C01_ _**		
2	5	7-1/2	7-1/2	15	20	25	40	7.5	11	14.5	14	—	1NO	**XTAE025C10_ _**		
2	5	7-1/2	7-1/2	15	20	25	40	7.5	11	14.5	14	—	1NC	**XTAE025C01_ _**		
3	5	10	10	20	25	32	40	10	15	18	17	—	1NO	**XTAE032C10_ _**		
3	5	10	10	20	25	32	40	10	15	18	17	—	1NC	**XTAE032C01_ _**		
Frame D																
3	7-1/2	10	15	30	40	40	50	12.5	18.5	24	23	—	—	**XTAE040D00_ _**		
3	10	15	20	40	50	50	60	15.5	22	30	30	—	—	**XTAE050D00_ _**		
5	15	20	25	50	60	65	72	20	30	39	35	—	—	**XTAE065D00_ _**		
Frame F																
7-1/2	15	25	30	60	75	80	110	25	37	48	63	—	—	**XTAE080F00_ _**		
7-1/2	15	25	40	75	100	95	110	30	45	57	75	—	—	**XTAE095F00_ _**		
Frame G																
10	25	40	50	100	125	115	160	37	55	70	105	—	—	**XTAE115G00_ _**		
15	30	40	60	125	125	150	160	48	75	91	125	—	—	**XTAE150G00_ _**		

① Underscore (_) indicates magnet coil suffix required. See **Table 34-67**.
② Underscore (_) indicates overload relay suffix required. See **Table 34-69**.
③ For electrical life contactor application data see **Table 34-68**.

Reversing Starters, C396 Electronic Overload

Table 34-66. Full Voltage Reversing Starters with Screw Terminals and C396 Electronic Overload

Maximum 3-Phase Motor Rating						I_e (A)	Maximum kW Ratings AC-3				Catalog Number ④⑤	Price U.S. $	
1-Phase hp Ratings		3-Phase hp Ratings				AC-3	3-Phase Motors 50 – 60 Hz					Standard	
115V	230V	200V	230V	460V	575V		220/ 230V	380/ 400V	415V	660/ 690V		AC Coil	DC Coil
Frame B													
1/4	1	1-1/2	2	3	5	7	2.2	3	4	3.5	**XTAR007B21_ _**		
1/2	1-1/2	3	3	5	7-1/2	9	2.5	4	5.5	4.5	**XTAR009B21_ _**		
1	2	3	3	10	10	12	3.5	5.5	7	6.5	**XTAR012B21_ _**		
Frame C													
2	3	5	5	10	15	18	5	7.5	8	11	**XTAR018C21_ _**		
2	5	7-1/2	7-1/2	15	20	25	7.5	11	14.5	14	**XTAR025C21_ _**		
3	5	10	10	20	25	32	10	15	18	17	**XTAR032C21_ _**		
Frame D													
3	7-1/2	10	15	30	40	40	12.5	18.5	24	23	**XTAR040D11_ _**		
3	10	15	20	40	50	50	15.5	22	30	30	**XTAR050D11_ _**		
5	15	20	25	50	60	65	20	30	39	35	**XTAR065D11_ _**		

④ Underscore (_) indicates magnet coil suffix required. See **Table 34-67**.
⑤ Underscore (_) indicates overload relay suffix required. See **Table 34-69**.

Coil Voltage Chart ..... **Page 34-43**
Accessories ..... **Page 34-49**
Dimensions ..... **Page 34-91**
Overload Relays ..... **Page 34-113**
Discount Symbol **1CD7**

Table 34-67. Magnet Coil Suffix

Coil Voltage	Suffix Code
Frame A – B	
110V 50 Hz, 120V 60 Hz	**A**
220V 50 Hz, 240V 60 Hz	**B**
230V 50 Hz	**F**
24V 50/60 Hz	**T**
24V DC	**TD**
415V 50 Hz, 480V 60 Hz	**C**
550V 50 Hz, 600V 60 Hz	**D**
208V 60 Hz	**E**
190V 50 Hz, 220V 60 Hz	**G**
240V 50 Hz, 277V 60 Hz	**H**
380V 50 Hz, 440V 60 Hz	**L**
400V 50 Hz	**N**
380V 60 Hz	**P**
12V 50/60 Hz	**R**
24V 50 Hz	**U**
42V 50 Hz, 48V 60 Hz	**W**
48V 50 Hz	**Y**
120V DC	**AD**
220V DC	**BD**
12V DC	**RD**
48V DC	**WD**

Coil Voltage	Suffix Code
Frame C – F	
110V 50 Hz, 120V 60 Hz	**A**
220V 50 Hz, 240V 60 Hz	**B**
230V 50 Hz	**F**
24V 50/60 Hz	**T**
24 – 27V DC	**TD**
415V 50 Hz, 480V 60 Hz	**C**
550V 50 Hz, 600V 60 Hz	**D**
208V 60 Hz	**E**
190V 50 Hz, 220V 60 Hz	**G**
240V 50 Hz, 277V 60 Hz	**H**
380V 50 Hz, 440V 60 Hz	**L**
400V 50 Hz	**N**
380V 60 Hz	**P**
12V 50/60 Hz	**R**
24V 50 Hz	**U**
42V 50 Hz, 48V 60 Hz	**W**
48V 50 Hz	**Y**
110 – 130V DC	**AD**
200 – 240V DC	**BD**
12 – 14V DC	**RD** ①
48 – 60V DC	**WD**

Coil Voltage	Suffix Code
Frame G	
100 – 120V 50/60 Hz	**A**
190 – 240V 50/60 Hz	**B**
24V 50/60 Hz	**T**
24 – 27V DC	**TD**
480 – 500V 50/60 Hz	**C**
380 – 440V 50/60 Hz	**L**
42 – 48V 50/60 Hz	**W**
110 – 130V DC	**AD**
200 – 240V DC	**BD**
48 – 60V DC	**WD**
Frame L – N	
110 – 250V 40 – 60 Hz/DC	**A**
250 – 500V 40 – 60 Hz	**C**
48 – 110V 40 – 60 Hz/DC	**Y**
24 – 48V DC	**TD** ②
Frame L – N, S-Series	
110 – 120V 50/60 Hz	**A**
220 – 240V 50/60 Hz	**B**
Frame P – R	
220 – 250V 50 – 60 Hz/DC	**B**

① Frame C – D only.
② Frame L – M only.

Table 34-68. Contactor Application Data ④

Catalog Prefix	Electrical Life (Operations) for 10hp, 480V (14.2A) Applications
XTCE012B	1 million
XTCE015B	1.2 million
XTCE018C	2 million

③ See **Page 34-88** for Electrical Life Curves.

Table 34-69. C396 Overload Relay Suffix

FLA Range (Amps)	Suffix Std. Class 5/10/20/30	For Use with *XT* IEC Contactor Frame Size / Width	Catalog Number Standard Class 5/10/20/30
45 mm Overload Frame Size			
0.1 – 0.5	**3EP05**	B / 45 mm	**C396A2AP05SELXB**
0.4 – 2.0	**3E002**	B / 45 mm	**C396A2A002SELXB**
1 – 5	**3E005**	B / 45 mm	**C396A2A005SELXB**
1.6 – 8	**3E008**	B / 45 mm	**C396A2A008SELXB**
6.4 – 32	**3E032**	B / 45 mm	**C396A2A032SELXB**
0.1 – 0.5	**3EP05**	C / 45 mm	**C396A2AP05SELXC**
0.4 – 2.0	**3E002**	C / 45 mm	**C396A2A002SELXC**
1 – 5	**3E005**	C / 45 mm	**C396A2A005SELXC**
1.6 – 8	**3E008**	C / 45 mm	**C396A2A008SELXC**
6.4 – 32	**3E032**	C / 45 mm	**C396A2A032SELXC**
6.4 – 32	**3E032**	D / 55 mm	**C396A2A032SELXD**
9 – 45	**3E045**	D / 55 mm	**C396A2A045SELXD**
65 mm Overload Frame Size			
15 – 75	**3E075**	D / 55 mm	**C396B2A075SELXD**
22 – 110	**3E110**	F – G / 90 mm	**C396B2A110SELXF**
110 mm Overload Frame Size			
30 – 150	**3E150**	G / 90 mm	**C396C2A150SELAX** ④

④ Catalog Number listed is for Stand-Alone Overload Relay. For direct connection of 110 mm C396 to Frame G ***XT*** Contactors use 110 mm ***XT*** Bus Bar Kit, C396CBARXT.

Accessories ..... **Page 34-49**
Dimensions ..... **Page 34-91**
Overload Relays ..... **Page 34-113**
Discount Symbol **1CD7**

34

Star-Delta (Wye-Delta) Starters

Table 34-70. Star-Delta (Wye-Delta) Starters

Maximum 3-Phase Current Motor Rating				I_e (A)	Maximum kW Ratings AC-3						Maximum Changeover Time (sec)	Components	
3-Phase hp Ratings				AC-3	3-Phase Motors 50 – 60 Hz							Description	Catalog Number ①
200V	230V	460V	575V		220/ 230V	380/ 400V	415V	500V	660/ 690V	1000V			
Frame B													
3	3	2-1/2	10	12	3	5.5	7	5.5	5.5	—	<20	K1M Main Contactor K5M Delta Contactor K3M Star Contactor Mechanical Interlock K1T Timing Relay Overload Relay (3) Auxiliary Contacts Star-Delta Link Kit	**XTCE007B10_** **XTCE007B01_** **XTCE007B01_** **XTCEXMLB** **XTTR6A60S51B** **XTOB…BC1** **XTCEXFAC20** **XTCEXSDLB**
3	5	7-1/2	10	16	4	7.5	8	7.5	7.5	—	<20	K1M Main Contactor K5M Delta Contactor K3M Star Contactor Mechanical Interlock K1T Timing Relay Overload Relay (3) Auxiliary Contacts Star-Delta Link Kit	**XTCE009B10_** **XTCE009B01_** **XTCE009B01_** **XTCEXMLB** **XTTR6A60S51B** **XTOB…BC1** **XTCEXFAC20** **XTCEXSDLB**
5	5	10	15	22	5.5	11	14.5	11	11	—	<20	K1M Main Contactor K5M Delta Contactor K3M Star Contactor Mechanical Interlock K1T Timing Relay Overload Relay (3) Auxiliary Contacts Star-Delta Link Kit	**XTCE012B10_** **XTCE012B01_** **XTCE012B01_** **XTCEXMLB** **XTTR6A60S51B** **XTOB…BC1** **XTCEXFAC20** **XTCEXSDLB**
Frame C													
7-1/2	7-1/2	15	20	30	7.5	15	19	18.5	18.5	—	<20	K1M Main Contactor K5M Delta Contactor K3M Star Contactor Mechanical Interlock K1T Timing Relay Overload Relay (3) Auxiliary Contacts Star-Delta Link Kit	**XTCE018C10_** **XTCE018C01_** **XTCE018C01_** **XTCEXMLC** **XTTR6A60S51B** **XTOB…CC1** **XTCEXFAC20** **XTCEXSDLC**
10	15	30	40	45	11	22	30	30	22	—	<20	K1M Main Contactor K5M Delta Contactor K3M Star Contactor Mechanical Interlock K1T Timing Relay Overload Relay (3) Auxiliary Contacts Star-Delta Link Kit	**XTCE025C10_** **XTCE025C01_** **XTCE025C01_** **XTCEXMLC** **XTTR6A60S51B** **XTOB…CC1** **XTCEXFAC20** **XTCEXSDLC**
15	20	40	50	55	15	30	39	37	30	—	<20	K1M Main Contactor K5M Delta Contactor K3M Star Contactor Mechanical Interlock K1T Timing Relay Overload Relay (3) Auxiliary Contacts Star-Delta Link Kit	**XTCE032C10_** **XTCE032C01_** **XTCE032C01_** **XTCEXMLC** **XTTR6A60S51B** **XTOB…CC1** **XTCEXFAC20** **XTCEXSDLC**
Frame D													
20	25	50	60	70	18.5	37	37	45	37	—	<20	K1M Main Contactor K5M Delta Contactor K3M Star Contactor Mechanical Interlock K1T Timing Relay Overload Relay (2) Auxiliary Contacts (K1M, K3M) (1) Auxiliary Contact (K5M) Star-Delta Link Kit	**XTCE040D00_** **XTCE040D00_** **XTCE040D00_** **XTCEXMLD** **XTTR6A60S51B** **XTOB…DC1** **XTCEXFBG11** **XTCEXFBG31** **XTCEXSDLD**
25	30	60	75	90	22	45	45	55	45	—	<20	K1M Main Contactor K5M Delta Contactor K3M Star Contactor Mechanical Interlock K1T Timing Relay Overload Relay (2) Auxiliary Contacts (K1M, K3M) (1) Auxiliary Contact (K5M) Star-Delta Link Kit	**XTCE050D00_** **XTCE050D00_** **XTCE040D00_** **XTCEXMLD** **XTTR6A60S51B** **XTOB…DC1** **XTCEXFBG11** **XTCEXFBG31** **XTCEXSDLD**

① Underscore (_) indicates magnet coil suffix required. See **Table 34-72**.

Table 34-70. Star-Delta (Wye-Delta) Starters (Continued)

Maximum 3-Phase Current Motor Rating				I_e (A)	Maximum kW Ratings AC-3						Maximum Changeover Time (sec)	Components	
3-Phase hp Ratings				AC-3	3-Phase Motors 50 – 60 Hz							Description	Catalog Number ①
200V	230V	460V	575V		220/ 230V	380/ 400V	415V	500V	660/ 690V	1000V			
Frame D (Continued)													
40	50	100	125	115	30	55	55	75	55	—	<20	K1M Main Contactor K5M Delta Contactor K3M Star Contactor Mechanical Interlock K1T Timing Relay Overload Relay (2) Auxiliary Contacts (K1M, K3M) (1) Auxiliary Contact (K5M) Star-Delta Link Kit	**XTCE065D00_** **XTCE065D00_** **XTCE040D00_** **XTCEXMLD** **XTTR6A60S51B** **XTOB…DC1** **XTCEXFBG11** **XTCEXFBG31** **XTCEXSDLD**
Frame F													
40	60	125	150	140	37	75	75	90	90	—	<20	K1M Main Contactor K5M Delta Contactor K3M Star Contactor ② Mechanical Interlock ② K1T Timing Relay Overload Relay (2) Auxiliary Contacts (K1M, K3M) (1) Auxiliary Contact (K5M) Star-Delta Link Kit	**XTCE080F00_** **XTCE080F00_** **XTCE050D00_** **XTCEXMLG** **XTTR6A60S51B** **XTOB…FC1** **XTCEXFBG11** **XTCEXFBG31** **XTCEXSDLF**
40	60	125	150	165	45	90	110	110	132	—	<20	K1M Main Contactor K5M Delta Contactor K3M Star Contactor ② Mechanical Interlock ② K1T Timing Relay Overload Relay (2) Auxiliary Contacts (K1M, K3M) (1) Auxiliary Contact (K5M) Star-Delta Link Kit	**XTCE095F00_** **XTCE095F00_** **XTCE065D00_** **XTCEXMLG** **XTTR6A60S51B** **XTOB…FC1** **XTCEXFBG11** **XTCEXFBG31** **XTCEXSDLF**
Frame G													
50	60	125	150	200	55	110	132	132	160	—	<20	K1M Main Contactor K5M Delta Contactor K3M Star Contactor Mechanical Interlock K1T Timing Relay Overload Relay (2) Auxiliary Contacts (1) Auxiliary Contact (K5M) Star-Delta Link Kit	**XTCE115G00_** **XTCE115G00_** **XTCE080F00_** **XTCEXMLG** **XTTR6A60S51B** **XTOB…GC1** **XTCEXFBG11** **XTCEXFBG31** **XTCEXSDLG**
75	100	200	250	260	75	132	148	160	160	—	<20	K1M Main Contactor K5M Delta Contactor K3M Star Contactor Mechanical Interlock K1T Timing Relay Overload Relay (2) Auxiliary Contacts (1) Auxiliary Contact (K5M) Star-Delta Link Kit	**XTCE150G00_** **XTCE150G00_** **XTCE080F00_** **XTCEXMLG** **XTTR6A60S51B** **XTOB…GC1** **XTCEXFBG11** **XTCEXFBG31** **XTCEXSDLG**
Frame L													
100	125	250	300	315	90	160	180	200	250	132	<30	K1M Main Contactor K5M Delta Contactor K3M Star Contactor ② Mechanical Interlock ② K1T Timing Relay Overload Relay K3M Auxiliary Contact Star-Delta Link Kit	**XTCE185L22_** **XTCE185L22_** **XTCE115G00_** **XTCEXMLM** **XTTR6A60S51B** **XTOB…LC1** **XTCEXFBG22** **XTCEXSDLL225**
125	150	300	400	385	110	200	240	250	315	160	<20	K1M Main Contactor K5M Delta Contactor K3M Star Contactor ② Mechanical Interlock ② K1T Timing Relay Overload Relay K3M Auxiliary Contact Star-Delta Link Kit	**XTCE225L22_** **XTCE225L22_** **XTCE150G00_** **XTCEXMLM** **XTTR6A60S51B** **XTOB…LC1** **XTCEXFBG22** **XTCEXSDLL225**
125	150	300	400	430	132	250	300	315	400	200	<30	K1M Main Contactor K5M Delta Contactor K3M Star Contactor Mechanical Interlock K1T Timing Relay Overload Relay Star-Delta Link Kit	**XTCE250L22_** **XTCE250L22_** **XTCE185L22_** **XTCEXMLM** **XTTR6A60S51B** **XTOB…LC1** **XTCEXSDLL250**

① Underscore (_) indicates magnet coil suffix required. See **Table 34-72**.

② If mechanical interlock of Star Contactor is required, it must be the same frame size of the Delta Contactor or use the same mechanical interlock, see **Table 34-86**, **Page 34-57** for mechanical interlocks. (Example: XTCE...L22_ and XTCE...M22_ both use Mechanical Interlock XTCEXMLM.)

Table 34-70. Star-Delta (Wye-Delta) Starters (Continued)

Maximum 3-Phase Current Motor Rating				I_e (A)	Maximum kW Ratings AC-3						Maximum Changeover Time (sec)	Components	
3-Phase hp Ratings				AC-3	3-Phase Motors 50 – 60 Hz							Description	Catalog Number ①
200V	230V	460V	575V		220/ 230V	380/ 400V	415V	500V	660/ 690V	1000V			
Frame M													
150	200	400	500	515	160	300	348	355	450	200	<30	K1M Main Contactor K5M Delta Contactor K3M Star Contactor Mechanical Interlock K1T Timing Relay Overload Relay Star-Delta Link Kit	**XTCE300M22_** **XTCE300M22_** **XTCE185L22_** **XTCEXMLM** **XTTR6A60S51B** **XTOT…C3S** **XTCEXSDLM400**
200	250	500	600	685	200	355	390	450	560	220	<20	K1M Main Contactor K5M Delta Contactor K3M Star Contactor Mechanical Interlock K1T Timing Relay Overload Relay Star-Delta Link Kit	**XTCE400M22_** **XTCE400M22_** **XTCE250L22_** **XTCEXMLM** **XTTR6A60S51B** **XTOT…C3S** **XTCEXSDLM400**
290	350	700	860	860	250	450	500	560	600	220	<30	K1M Main Contactor K5M Delta Contactor K3M Star Contactor Mechanical Interlock K1T Timing Relay Overload Relay	**XTCE500M22_** **XTCE500M22_** **XTCE300M22_** **XTCEXMLM** **XTTR6A60S51B** **XTOT…C3S**
Frame N													
—	—	—	—	1000	300	560	610	710	900	355	<30	K1M Main Contactor K5M Delta Contactor K3M Star Contactor ② Mechanical Interlock ② K1T Timing Relay Overload Relay	**XTCE580N22_** **XTCE580N22_** **XTCE400M22_** **XTCEXMLN** **XTTR6A60S51B** **XTOT…C3S**
—	—	—	—	1120	350	630	680	750	950	355	<30	K1M Main Contactor K5M Delta Contactor K3M Star Contactor ② Mechanical Interlock ② K1T Timing Relay Overload Relay	**XTCE650N22_** **XTCE650N22_** **XTCE400M22_** **XTCEXMLN** **XTTR6A60S51B** **XTOT…C3S**
—	—	—	—	1290	400	710	760	900	1200	1400	<30	K1M Main Contactor K5M Delta Contactor K3M Star Contactor Mechanical Interlock K1T Timing Relay Overload Relay	**XTCE750N22_** **XTCE750N22_** **XTCE580N22_** **XTCEXMLN** **XTTR6A60S51B** **XTOT…C3S**
—	—	—	—	1400	450	800	850	950	1300	1400	<30	K1M Main Contactor K5M Delta Contactor K3M Star Contactor Mechanical Interlock K1T Timing Relay Overload Relay	**XTCE820N22_** **XTCE820N22_** **XTCE580N22_** **XTCEXMLN** **XTTR6A60S51B** **XTOT…C3S**
—	—	—	—	1700	560	1000	1050	1200	1700	1700	<20	K1M Main Contactor K5M Delta Contactor K3M Star Contactor Mechanical Interlock K1T Timing Relay Overload Relay	**XTCEC10N22_** **XTCEC10N22_** **XTCE650N22_** **XTCEXMLN** **XTTR6A60S51B** **XTOT…C3S**

① Underscore (_) indicates magnet coil suffix required. See **Table 34-72**.

② If mechanical interlock of Star contactor is required, it must be the same frame size of the Delta contactor or use the same mechanical interlock, see **Table 34-86**, **Page 34-57** for mechanical interlocks. (Example: XTCE...L22_ and XTCE...M22_ both use Mechanical Interlock XTCEXMLM.)

Table 34-71. Spare Auxiliary Contacts

AC-3	K1M	K3M	K5M
12 – 55			
90 – 260		—	—
315 – 1700			

Notes:

Main Circuit: Depending on the coordination type required (i.e. Type 1 or Type 2) it must be established whether the fuse protection and the input wiring for the main and delta contactors are to be common or separate.

Control Circuit: If the combinations are used in the scope of the IEC/EN 60 204-1, VDE 0113 part 1, point 9.1.1 regarding the supply of control circuits is to be observed.

Coil Voltage Chart ..... **Page 34-47**
Accessories ..... **Page 34-49**
Dimensions ..... **Page 34-91**
Overload Relays ..... **Page 34-104**
Discount Symbol **1CD7**

Table 34-72. Magnet Coil Suffix

Coil Voltage	Suffix Code
Frame A – B	
110V 50 Hz, 120V 60 Hz	**A**
220V 50 Hz, 240V 60 Hz	**B**
230V 50 Hz	**F**
24V 50/60 Hz	**T**
24V DC	**TD**
415V 50 Hz, 480V 60 Hz	**C**
550V 50 Hz, 600V 60 Hz	**D**
208V 60 Hz	**E**
190V 50 Hz, 220V 60 Hz	**G**
240V 50 Hz, 277V 60 Hz	**H**
380V 50 Hz, 440V 60 Hz	**L**
400V 50 Hz	**N**
380V 60 Hz	**P**
12V 50/60 Hz	**R**
24V 50 Hz	**U**
42V 50 Hz, 48V 60 Hz	**W**
48V 50 Hz	**Y**
120V DC	**AD**
220V DC	**BD**
12V DC	**RD**
48V DC	**WD**

Coil Voltage	Suffix Code
Frame C – F	
110V 50 Hz, 120V 60 Hz	**A**
220V 50 Hz, 240V 60 Hz	**B**
230V 50 Hz	**F**
24V 50/60 Hz	**T**
24 – 27V DC	**TD**
415V 50 Hz, 480V 60 Hz	**C**
550V 50 Hz, 600V 60 Hz	**D**
208V 60 Hz	**E**
190V 50 Hz, 220V 60 Hz	**G**
240V 50 Hz, 277V 60 Hz	**H**
380V 50 Hz, 440V 60 Hz	**L**
400V 50 Hz	**N**
380V 60 Hz	**P**
12V 50/60 Hz	**R**
24V 50 Hz	**U**
42V 50 Hz, 48V 60 Hz	**W**
48V 50 Hz	**Y**
110 – 130V DC	**AD**
200 – 240V DC	**BD**
12 – 14V DC	**RD** ①
48 – 60V DC	**WD**

Coil Voltage	Suffix Code
Frame G	
100 – 120V 50/60 Hz	**A**
190 – 240V 50/60 Hz	**B**
24V 50/60 Hz	**T**
24 – 27V DC	**TD**
480 – 500V 50/60 Hz	**C**
380 – 440V 50/60 Hz	**L**
42 – 48V 50/60 Hz	**W**
110 – 130V DC	**AD**
200 – 240V DC	**BD**
48 – 60V DC	**WD**
Frame L – N	
110 – 250V 40 – 60 Hz/DC	**A**
250 – 500V 40 – 60 Hz	**C**
48 – 110V 40 – 60 Hz/DC	**Y**
24 – 48V DC	**TD** ②
Frame L – M, S-Series	
110 – 120V 50/60 Hz	**A**
220 – 240V 50/60 Hz	**B**
Frame P – R	
220 – 250V 50 – 60 Hz/DC	**B**

① Frame C – D only.
② Frame L – M only.

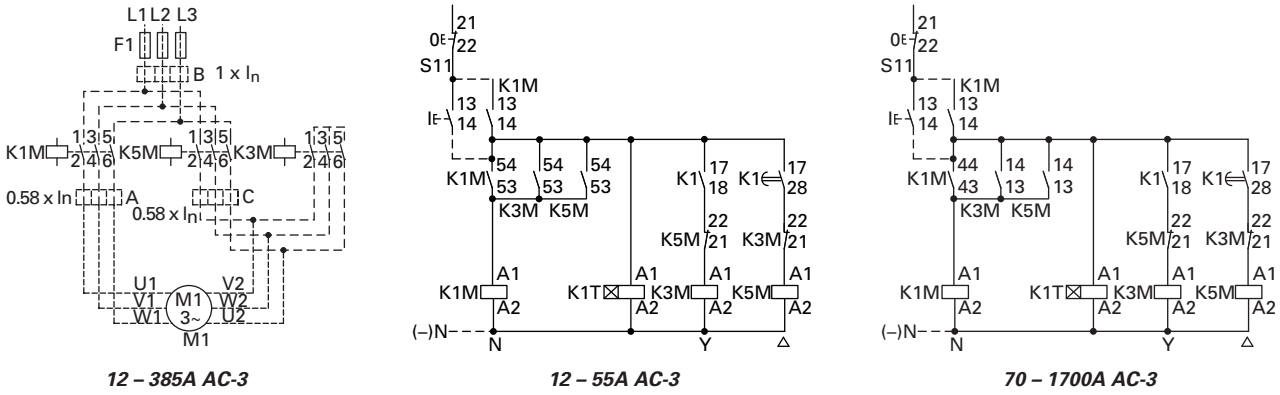

12 – 385A AC-3 ***12 – 55A AC-3*** ***70 – 1700A AC-3***

Overload Relay Settings (A)

Setting	Starting
A: I_N x 0.58 Motor Protection in the Star (Wye) and Delta Configurations	≤ 15 sec
B: I_N x 1 Only partial motor protection in Star position	15 – 40 sec
C: I_N x 0.58 Motor not protected in Star (Wye) position	> 40 sec
Timing Relay set to approximately 10 sec	

Figure 34-35. Wiring Diagrams

Overload Relays ..... **Page 34-104**

34

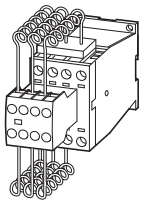

Table 34-73. XTCC Contactors for Three-Phase Capacitors

Three-Phase Capacitors, 50 – 60 Hz Open kVar Ratings ①				Contact Sequence	Catalog Number ②③	Price U.S. $
230V	400V	525V	690V			
11	20	25	33.3	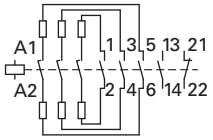	XTCC020C11_	
15	25	33.3	40		XTCC025C11_	
20	33.3	40	55	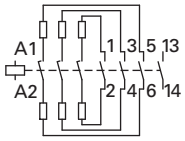	XTCC033D10_	
25	50	65	85		XTCC050D10_	

① With series resistors, without quick-discharge resistor.
② Underscore (_) indicates magnet coil suffix required, see **Table 34-74**.
③ Contact Eaton for availability.

Notes:

- Weld-resistant for capacitors with inrush current peaks up to 180 x I_N.

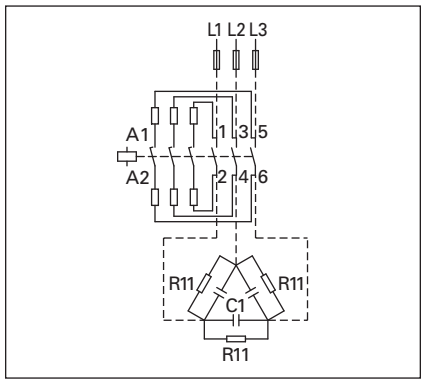

Figure 34-36. Wiring Diagram

- In the case of group compensation multi-stage capacitor banks are connected to the mains, as required. In the process, transient currents of up to 180 x I_e can flow between the capacitors. The capacitors are pre-charged via the early-make auxiliary contacts and the fitted wire resistors, thereby reducing the inrush current. The main contacts then close after a time lag and carry the uninterrupted current. The contactors for capacitors are weld-resistant with inrush current peaks up to 180 x 1 I_e due to their special contacts. For switching reactive-power compensation equipment with chokes, observe design notes.
- For switching of power factor connection with reactors please observe engineering notes, **Table 34-75**. Use of the contactors XTCE without series resistor for centralized power factor correction — when using contactors for group compensation, a minimum inductance of approximately 6 µH per capacitor must be available to limit the high inrush current peaks. This corresponds to an air-cored coil with 5 windings and a coil diameter of approximately 140 mm diameter. The conductor cross-section must be selected according to the rated current per phase.

Table 34-74. Magnet Coil Suffix

Coil Voltage	Suffix Code
110V 50 Hz, 120V 60 Hz	**A**
220V 50 Hz, 240V 60 Hz	**B**
230V 50 Hz, 240V 60 Hz	**F**
400V 50 Hz, 440V 60 Hz	**N**
24V 50/60 Hz	**T**

Table 34-75. Engineering Notes for XTCC and XTCE Contactors for Power Factor Correction

Catalog Number	Switching Duty in kVar			
	230V	400V 420V 440V	525V	690V
Individual Compensation, Open Version				
XTCE007B	1.5	3	3.5	5
XTCE009B	2	4	4.5	6
XTCE012B	2.5	4.5	5.5	7
XTCE015B	2.5	4.5	5.5	7
XTCE018C	6.5	12	14.5	19
XTCE025C	7	13.5	16	21
XTCE032C	7.5	14.5	17	22.5
XTCE040D	11	20.5	24.5	32
XTCE050D	11.5	22	26	34.5
XTCE065D	12.5	23.5	28	37
XTCE080F	16	30.5	36.5	48
XTCE095F	18	34	41	54
XTCE115G	24	46	54.5	72
XTCE150G	28	53	63.5	83.5
XTCE185L	87	150	190	150
XTCE300M	115	200	265	200
XTCE580N	175	300	400	300
Group Compensation, with Reactor, Open Version				
XTCE007B	4	7	7.5	12
XTCE009B	5	8	10	14
XTCE012B	5.5	10	12	16
XTCE015B	5.5	10	12	16
XTCE018C	7.5	16	20	28
XTCE025C	9	18	23	30
XTCE032C	10	20	24	32
XTCE040D	13	25	30	40
XTCE050D	16	30	36	48
XTCE065D	19	36	43	57
XTCE080F	30	58	68	90
XTCE095F	34	66	79	104
XTCE115G	44	80	100	125
XTCE150G	50	97	115	152
XTCE185L	80	150	200	260
XTCE225L	100	175	230	300
XTCE250L	110	190	260	340
XTCE300M	130	225	290	390
XTCE400M	160	280	370	480
XTCE500M	220	390	500	680
Group Compensation, without Reactor, Open Version				
XTCC020C	11	20	25	33.3
XTCC025C	15	25	33.3	40
XTCC033D	20	33.3	40	55
XTCC050D	25	50	65	85
XTCR185L	66	115	145	115
XTCE300M	85	150	195	150
XTCE580N	145	250	333	250

Discount Symbol **1CD7**

Accessories

Auxiliary Contacts

Front mounted snap-on auxiliary contacts for ***XT*** contactors are available with screw or spring cage terminals in a variety of contact configurations.

Notes:
The 7 – 32A XTCE Contactors have positively driven contacts between the integrated auxiliary contact and the auxiliary contact module as well as within the auxiliary contact modules.

The 40 – 65A XTCE Contactors have positively driven contacts within the auxiliary contact module. 6 auxiliary contacts are possible with a combination of side mounted and front mount auxiliary contacts.

Frame B – C contactors with 1NC built-in auxiliary are mirror contacts (XTCE...B01_ – XTCE...C01_).

Table 34-76. XTCE and XTCS Auxiliary Contact Overview

Frame	A	B	C	D	F	G	L – R
Catalog Numbers	XTMC6A... – XTMC9A...	XTCE007B... – XTCE015B...	XTCE018C... – XTCE032C...	XTCE040D00_ – XTCE072D00_	XTCE080F00_ – XTCE095F00_	XTCE115G00_ – XTCE170G00_	XTCE185L22_ – XTCEC20R22_ ①
Contactor Width	45 mm	45 mm	45 mm	55 mm	90 mm	90 mm	Various
Built-In Auxiliary	1NO or 1NC	1NO or 1NC	1NO or 1NC	—	—	—	2NO-2NC
Contact Sequence	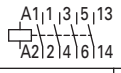 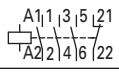			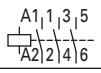			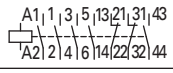
Front (Top) Mount Auxiliary	**2-Pole & 4-Pole (Screw or Spring Cage):** 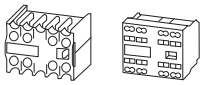	**Standard 2-Pole & 4-Pole Versions (Screw or Spring Cage):** 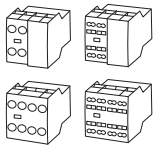 **Tall Version (Screw Only):** 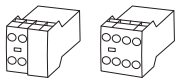		**2-Pole (Screw Only):**  **4-Pole (Screw or Spring Cage):** 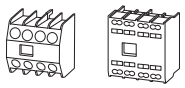			N/A
Side Mount Auxiliary	N/A	**1-Pole (Screw Only):** 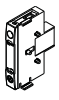	**2-Pole (Screw Only):** 	**2-Pole (Screw or Spring Cage):** 			

① Frame L – R auxiliary contacts also apply to XTCS185L... – XTCS500M... contactors.

34

Table 34-77. Auxiliary Contacts

	Conventional Thermal Current, Open at 60°C $I_{th} = I_e$, AC-1 in Amps	Poles	Contact Configuration	Circuit Symbol	Pkg. Qty.	Screw Terminals Catalog Number	Spring Cage Terminals Catalog Number	Price U.S. $ ①
Frame B – C — Front (Top) Mount								
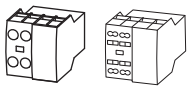	16	2	2NO		5	**XTCEXFAC20**	**XTCEXFACC20**	
	16	2	1NO-1NC		5	**XTCEXFAC11**	**XTCEXFACC11**	
	16	2	2NC		5	**XTCEXFAC02**	**XTCEXFACC02**	
	16	2	$1NO_E$-$1NC_L$		5	**XTCEXFALC11** ②	**XTCEXFALCC11** ②	
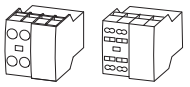	16	2	1NO-1NC		5	**XTCEXFDC11** ③	**XTCEXFDCC11** ③	
	16	2	2NC		5	**XTCEXFCC02** ③	**XTCEXFCCC02** ③	
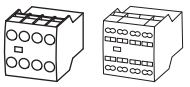	16	4	4NO		5	**XTCEXFAC40**	**XTCEXFACC40**	
	16	4	3NO-1NC		5	**XTCEXFAC31**	**XTCEXFACC31**	
	16	4	2NO-2NC		5	**XTCEXFAC22**	**XTCEXFACC22**	
	16	4	1NO-3NC		5	**XTCEXFAC13**	**XTCEXFACC13**	
	16	4	4NC		5	**XTCEXFAC04**	**XTCEXFACC04**	
	16	4	$1NO_E$-$1NC_L$	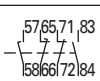	5	**XTCEXFCLC22** ②	**XTCEXFCLCC22** ②	
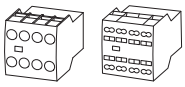	16	4	2NO-2NC		5	**XTCEXFCC22** ③	**XTCEXFCCC22** ③	
Frame B — Side Mount								
	16	1	1NO		1	**XTCEXSAB10**	—	
	16	1	1NC		1	**XTCEXSAB01**	—	

① Orders must be placed in multiples of package quantity listed.
② 1 early-make contact ($1NO_E$), 1 late-break contact ($1NC_L$).
③ To avoid duplicate terminal numbers in contact sequence, these auxiliary contacts should only be used with contactors having a built-in 1NO contact (XTCE...B10_, XTCE...C10_).

Technical Data . . . . . **Page 34-79**
Discount Symbol **1CD7**

Table 34-77. Auxiliary Contacts (Continued)

	Conventional Thermal Current, Open at 60°C $I_{th} = I_e$, AC-1 in Amps	Poles	Contact Configuration	Circuit Symbol	Pkg. Qty.	Screw Terminals Catalog Number	Spring Cage Terminals Catalog Number	Price U.S. $ ①
Frame B – C — Front (Top) Mount — Tall Version ③								
	16	2	2NO		5	**XTCEXFATC20**	—	
	16	2	1NO-1NC		5	**XTCEXFATC11**	—	
	16	2	2NC		5	**XTCEXFATC02**	—	
	16	4	2NO-2NC	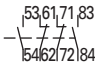	5	**XTCEXFATC22**	—	
Frame C — Side Mount								
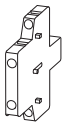	10	2	1NO-1NC		1	**XTCEXSCC11 ④**	—	
Frame D – G								
	16	2	2NO		5	**XTCEXFBG20**	—	
	16	2	1NO-1NC		5	**XTCEXFAG11**	—	
	16	2	1NO-1NC		5	**XTCEXFBG11**	—	
	16	2	2NC		5	**XTCEXFBG02**	—	
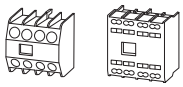	16	4	4NO-0NC	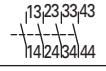	5	**XTCEXFBG40**	**XTCEXFBGC40**	
	16	4	3NO-1NC	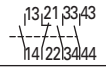	5	**XTCEXFBG31**	**XTCEXFBGC31**	
	16	4	2NO-2NC	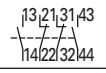	5	**XTCEXFBG22**	**XTCEXFBGC22**	
	16	4	2NO-2NC	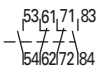	5	**XTCEXFAG22**	**XTCEXFAGC22**	
	16	4	1NO-3NC	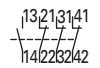	5	**XTCEXFBG13**	**XTCEXFBGC13**	
	16	4	0NO-4NC	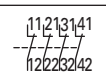	5	**XTCEXFBG04**	**XTCEXFBGC04**	
	16	4	$1NO_E$-$1NC_L$	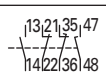	5	**XTCEXFBLG22 ②**	**XTCEXFBLGC22 ②**	

① Orders must be placed in multiples of package quantity listed.

② 1 early-make contact ($1NO_E$), 1 late-break contact ($1NC_L$).

③ Front (Top) Mount Tall Version is for use with Frame B Electrical Wire Bridges and Link Kits (see **Page 34-57**) and Toolless Plug Combination Connection Kits: XTCEXRLB, XTCEXSDLB, XTPAXTPCB, XTPAXTPCRB, XTPAX.

④ Can be mounted to the left side of contactor only. Cannot be used in combination with front (top) mount auxiliary contacts or mechanical interlocks.

Notes:

- Interlocked opposing contacts, to IEC/EN 60947-5-1 Annex L (positively driven), within the auxiliary contact modules (not NO (early make) and NC (late break) contacts) and for the built-in auxiliary contacts of the XTCE007B... – XTCE032C....
- Auxiliary break contact can be used as mirror contact to IEC/EN 60947-4-1 Annex F (not NC (late break) contact).
- No auxiliary contacts can be fitted between two contactors.

Technical Data ..... **Page 34-79**
Discount Symbol **1CD7**

34

Table 34-78. Side Mount Auxiliary Contacts for Frame D – R, 40 – 2000A

	Conventional Free Air Thermal Current, $I_{th} = I_e$, AC-1 in Amps	Poles	Contact Configuration	Circuit Symbol	Pkg. Qty.	Screw Terminals Catalog Number	Spring Cage Terminals Catalog Number	Price U.S. $
Frame D – R								
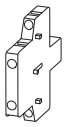	10	2	1NO-1NC		1	**XTCEXSBN11**	**XTCEXSBNC11**	
	10	2	$1NO_E$-$1NC_L$		1	**XTCEXSBLN11** ①	—	
	10	2	1NO-1NC		1	**XTCEXSCN11** ②	**XTCEXSCNC11** ②	
Frame D – R (Screw Mount)								
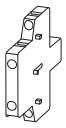	10	2	1NO-1NC		1	**XTCEXSBR11**	—	
	10	2	$1NO_E$-$1NC_L$		1	**XTCEXSBLR11**	—	
	10	2	1NO-1NC		1	**XTCEXSCR11**	—	

① 1 early-make contact ($1NO_E$), 1 late-break contact ($1NC_L$).
② To maintain proper terminal marking, XTCEXSCN_ should not be used with Frame D contactors and only used with Frame F – G contactors in combination with XTCEXSBN_.

Technical Data . . . . . **Page 34-79**
Discount Symbol **1CD7**

Table 34-79. Auxiliary Contacts Possible Combinations

Frame Size	Catalog Number	Contactor	Built-In Auxiliary	Front (Top) Mount		Side Mount		Total Auxiliary Contacts Available
				2-Pole	4-Pole	1-Pole	2-Pole	
A	**XTMC6A… – XTMC9A…**		1NO or 1NC	1	—	—	—	3
				—	1	—	—	5
						—	—	—
B	**XTCE007B… – XTCE015B…**	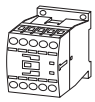	1NO or 1NC	1	—	—	—	3
				—	1	—	—	5
				—	—	1	—	2
							—	—
C	**XTCE018C… – XTCE032C…**	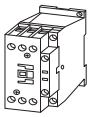	1NO or 1NC	1	—	—	—	3
				—	1	—	—	5
				—	—	—	1	3
						—		—
D	**XTCE040D00_ – XTCE065D00_**	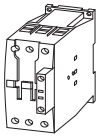	—	1	—	—	2	6
				—	1	—	1	6
						—		—
F – G	**XTCE080F00_ – XTCE150G00_**	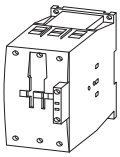	—	1	—	—	2	6
				—	1	—	2	8
				—	—	—	4	8
						—		—
L – R	**XTCE185L22_ – XTCEC20R22_**	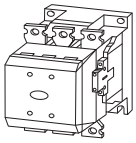	2NO-2NC	—	—		2	8
				—	—			—

Notes:

- Forced operation contact to IEC/EN 60947-5-1 Appendix L (positively driven), inside the auxiliary contact unit (not early close and late opening).
- Auxiliary normally closed contact can be used as mirror contact to IEC/EN 60947-4-1 Appendix F (not late opening).
- No auxiliary contacts can be fitted between two contactors.

Technical Data ..... **Page 34-79**
Discount Symbol **1CD7**

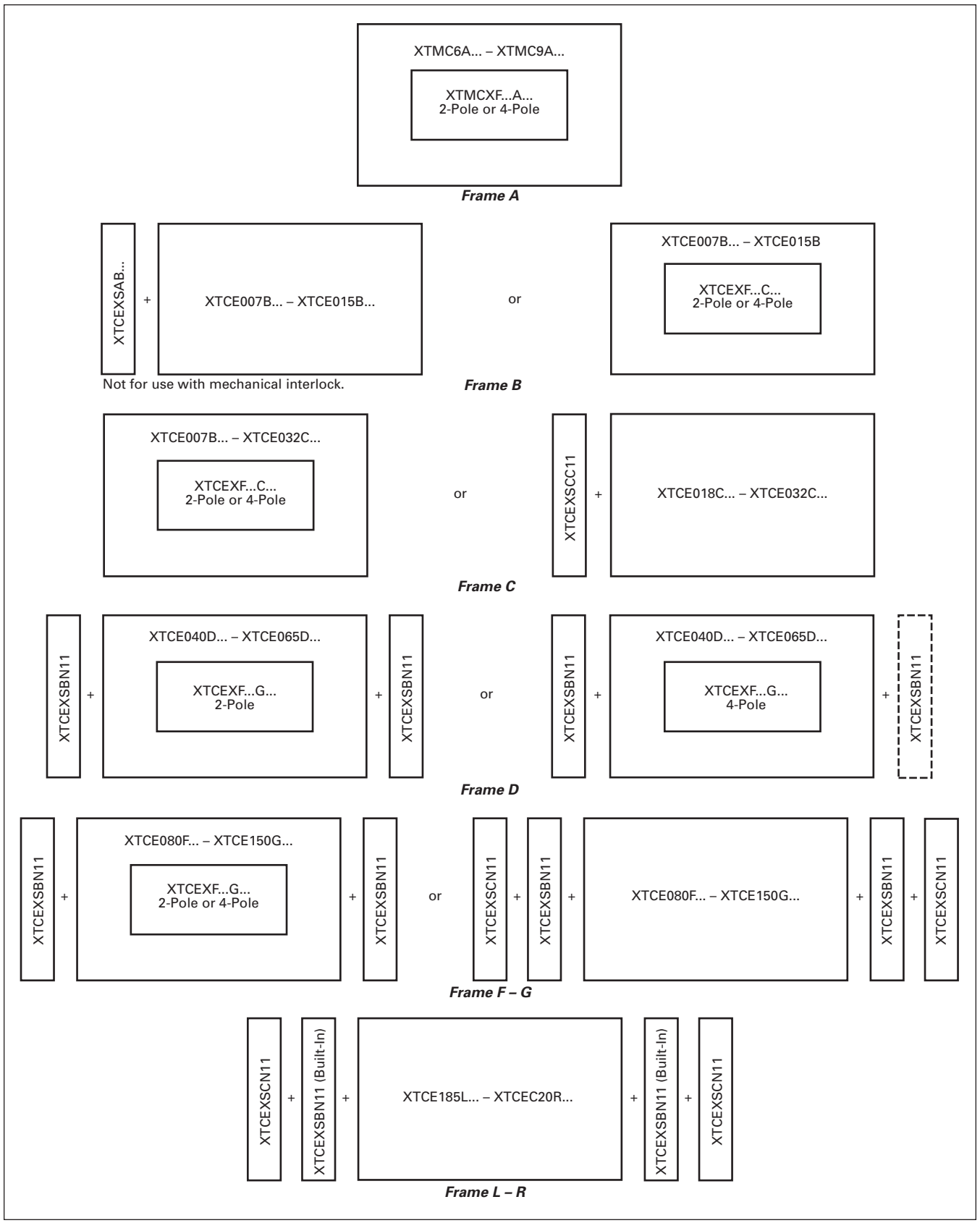

Figure 34-37. Auxiliary Contact Combinations

Suppressors

The switching of contactor coils can generate voltage transients that may cause arching on switch contacts and/or damage electronics on the control line. Either a RC or Varistor Suppressor is recommended in these types of applications. All ***XT*** DC contactor coils have built-in suppression.

Varistor Suppressors clamp the voltage transient above the maximum coil voltage and are recommended when the level of the transient is known to not exceed the coil voltage. RC Suppressors slow and reduce the level of the voltage transient but do not clamp them at a specific level. The slowing of the transient can reduce electrical interference. These are recommended in applications where operating rates are high.

RC Suppressor ①②



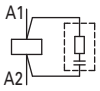

Contact Sequence

Table 34-80. RC Suppressor

Voltage	For Use with…	Pkg. Qty.	Catalog Number	Price U.S. $ ③
24 – 48 48 – 130 110 – 240 240 – 500	XTCE007B – XTCE015B, XTCF020B	10 10 10 10	**XTCEXRSBW** **XTCEXRSBA** **XTCEXRSBB** **XTCEXRSBC**	
24 – 48 110 – 130 130 – 240 240 – 500	XTCE018C – XTCE032C	10 10 10 10	**XTCEXRSCW** **XTCEXRSCA** **XTCEXRSCB** **XTCEXRSCC**	
24 – 48 110 – 130 130 – 240 240 – 500	XTCE040D – XTCE095F	10 10 10 10	**XTCEXRSFW** **XTCEXRSFA** **XTCEXRSFB** **XTCEXRSFC**	

① Note drop-out delay.
② For AC operated contactors, 50 – 60 Hz. DC operated contactors and XTCE115G_ to XTCE170G_ have a built-in suppressor circuit.
③ Orders must be placed in multiples of package quantity listed.

Varistor Suppressor ④⑤





Contact Sequence

Table 34-81. Varistor Suppressor

Voltage	For Use with…	Pkg. Qty.	Catalog Number	Price U.S. $ ⑥
24 – 48 48 – 130 130 – 240 240 – 500	XTCE007B – XTCE015B, XTCF020B	10 10 10 10	**XTCEXVSBW** **XTCEXVSBA** **XTCEXVSBB** **XTCEXVSBC**	
24 – 48 48 – 130 130 – 240 240 – 500	XTCE018C – XTCE032C	10 10 10 10	**XTCEXVSCW** **XTCEXVSCA** **XTCEXVSCB** **XTCEXVSCC**	
24 – 48 48 – 130 130 – 240 240 – 500	XTCE040D – XTCE095F	10 10 10 10	**XTCEXVSFW** **XTCEXVSFA** **XTCEXVSFB** **XTCEXVSFC**	

④ Note drop-out delay.
⑤ For AC operated contactors, 50/60 Hz. DC operated contactors have a built-in suppressor.
⑥ Orders must be placed in multiples of package quantity listed.

Varistor Suppressor with Integrated LED ⑦⑧



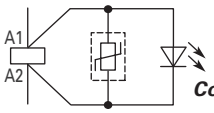

Contact Sequence

Table 34-82. Varistor Suppressor

Voltage AC	For Use with…	Pkg. Qty.	Catalog Number	Price U.S. $ ⑨
24 – 48 130 – 240	XTCE007B – XTCE015B	10 10	**XTCEXVSLBW** **XTCEXVSLBB**	
24 – 48 130 – 240	XTCE018C – XTCE032C	10 10	**XTCEXVSLCW** **XTCEXVSLCB**	
24 – 48 130 – 240	XTCE040D – XTCE095F	10 10	**XTCEXVSLFW** **XTCEXVSLFB**	

⑦ Note drop-out delay.
⑧ For AC operated contactors, 50/60 Hz. DC operated contactors have an integrated suppressor.
⑨ Orders must be placed in multiples of package quantity listed.

Free-Wheel Diode Suppressor ⑩



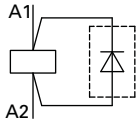

Contact Sequence

Table 34-83. Free-Wheel Diode Suppressor

Voltage DC	For Use with…	Pkg. Qty.	Catalog Number	Price U.S. $ ⑪
12 – 250	XTCE007B – XTCE015B, XTCF020B	10	**XTCEXDSB**	

⑩ In addition to the built-in suppressor circuit for DC actuated contactors. Prevents negative breaking voltage when contactors are used in combination with a safety PLC.
⑪ Orders must be placed in multiples of package quantity listed.

Voltage Indicator



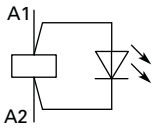

Contact Sequence

Table 34-84. Voltage Indicator

Voltage DC	For Use with…	Pkg. Qty.	Catalog Number	Price U.S. $ ⑫
12 – 48 48 – 130 110 – 250	XTCE007B – XTCE015B, XTCF020B	10 10 10	**XTCEXVIBW** **XTCEXVIBA** **XTCEXVIBB**	
24 – 48 48 – 130 130 – 250	XTCE018C – XTCE032C	10 10 10	**XTCEXVICW** **XTCEXVICA** **XTCEXVICB**	
42 – 48 48 – 130 130 – 250	DC operated: XTCE040D – XTCE095F AC/DC operated: XTCE115G – XTCE150G	10 10 10	**XTCEXVIGW** **XTCEXVIGA** **XTCEXVIGB**	

⑫ Orders must be placed in multiples of package quantity listed.

Technical Data ..... **Page 34-79**
Discount Symbol **1CD7**

34

Electronic Timer Modules ①

Table 34-85. Electronic Timer Modules for Frame B – C Contactors (7 – 32A)

	Voltage	Contact Sequence	Timing Range	For Use with…	Pkg. Qty.	Catalog Number	Price U.S. $
	**On-Delayed**						
	24V AC/DC	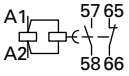	0.05 s – 1 s 0.5 – 10 s 5 s – 100 s	XTCE...B... XTCE...C...	1	**XTCEXTEEC11T**	
	100 – 130V AC					**XTCEXTEEC11A**	
	200 – 240V AC					**XTCEXTEEC11B**	
	Off-Delayed						
	24V AC/DC	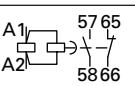	0.05 s – 1 s	XTCE...B... XTCE...C...	1	**XTCEXTED1C11T**	
	100 – 130V AC					**XTCEXTED1C11A**	
	200 – 230V AC					**XTCEXTED1C11B**	
	24V AC/DC	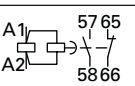	0.5 – 10 s	XTCE...B... XTCE...C...	1	**XTCEXTED10C11T**	
	100 – 130V AC					**XTCEXTED10C11A**	
	200 – 240V AC					**XTCEXTED10C11B**	
	24V AC/DC	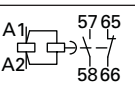	5 s – 100 s	XTCE...B... XTCE...C...	1	**XTCEXTED100C11T**	
	100 – 130V AC					**XTCEXTED100C11A**	
	200 – 240V AC					**XTCEXTED100C11B**	
	Star-Delta						
	24V AC/DC	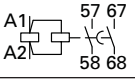	1 s – 30 s	XTCE...B... XTCE...C...	1	**XTCEXTEYC20T**	
	100 – 130V AC					**XTCEXTEYC20A**	
	200 – 240V AC					**XTCEXTEYC20B**	
Sealable Shroud							
	—	Transparent sealable shroud used to protect electronic timer modules from unwanted access.		XTCEXTEE, XTCEXTED, XTCEXTEY	1	**XTCEXTESHRD**	

① Front (Top) mounted timer modules for use with XTCE...B and XTCE…C contactors. Cannot be combined with top mount auxiliary contacts, XTCEXF...C__.

Discount Symbol **1CD7**

Mechanical Interlock ①



Table 34-86. Mechanical Interlock

	For Use with…	Pkg. Qty.	Catalog Number	Price U.S. $ ②
	XTCE007B – XTCE015B, XTCF020B	5	**XTCEXMLB**	
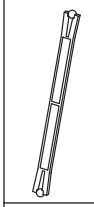	XTCE018C – XTCE032C XTCF032C – XTCF045C	1	**XTCEXMLC**	
	XTCE040D – XTCE072D XTCF063D – XTCF080D	1	**XTCEXMLD**	
	XTCE080F – XTCE170G XTCF125G – XTCF200G	1	**XTCEXMLG** ③	
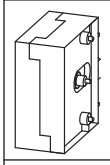	XTCE185L – XTCE570M	1	**XTCEXMLM**	
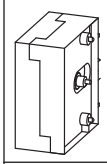	XTCE580N – XTCEC10N	1	**XTCEXMLN** ③	
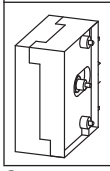	XTCE500M – XTCE570M with XTCE580N – XTCEC10N	1	**XTCEXMLNM** ③	

① For two contactors with AC or DC operated magnet system which are horizontally or vertically mounted. For B – G frames, mechanical lifespan is 2.5 x 10^6 operations and the distance between contactors is 0 mm. For L – N frames, mechanical lifespan is 5 x 10^6 operations and no auxiliary contact can be mounted between the mechanical interlock and the contactor — the distance between contactors is 15 mm.

② Orders must be placed in multiples of package quantity listed.

③ XTCEXMLG, XTCEXMLN and XTCEXMLNM consist of an interlock element and mounting plate.

Reversing Link Kits



Main current wiring for reversing combinations. Includes Paralleling Bridge and Reversing Bridge. Does not include Mechanical Interlock, see **Table 34-86**.

Table 34-87. Reversing Link Kits

	For Use with…	Pkg. Qty.	Catalog Number	Price U.S. $
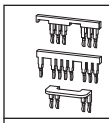	XTCE007B – XTCE015B	1	**XTCEXRLB** ④	
	XTCE018C – XTCE032C	1	**XTCEXRLC**	
	XTCE040D – XTCE065D	1	**XTCEXRLD**	
	XTCE080F – XTCE150G	1	**XTCEXRLG**	
	XTCE185L – XTCE250L	1	**XTCEXRLL**	
	XTCE300M – XTCE400M	1	**XTCEXRLM400**	

④ Also includes Interlocking Bridge (XTCEXLBB). The following control cables are integrated for electrical interlock: K1M: A1 – K2M: 21; K1M: 21 – K2M: A1; K1M: A2 – K2M: A2.

Star-Delta (Wye-Delta) Link Kits



Main current wiring for star-delta (wye-delta) combinations. Includes Paralleling Bridge, Reversing Bridge, and Star-Delta Bridge. Does not include Mechanical Interlock, see **Table 34-86**.

Table 34-88. Star-Delta (Wye-Delta) Link Kits

	For Use with…	Pkg. Qty.	Catalog Number	Price U.S. $
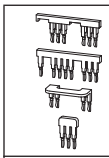	XTCE007B – XTCE015B	1	**XTCEXSDLB** ⑤	
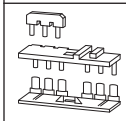	XTCE018C – XTCE032C	1	**XTCEXSDLC**	
	XTCE040D – XTCE065D	1	**XTCEXSDLD**	
	XTCE080F – XTCE095F	1	**XTCEXSDLF**	
	XTCE115G – XTCE150G	1	**XTCEXSDLG**	
	XTCE185L – XTCE225L	1	**XTCEXSDLL225**	
	XTCE250L	1	**XTCEXSDLL250**	
	XTCE300M – XTCE400M	1	**XTCEXSDLM400**	

⑤ Also includes Interlocking Bridge (XTCEXLBB). The following control cables are integrated for electrical interlock: K1M: A1 – K2M: 21; K1M: 21 – K2M: A1; K1M: A2 – K2M: A2.

Paralleling Bridge



Component part of Reversing Link Kit (XTCEXRL_). Parallels the phases on the line-side of two contactors.

Table 34-89. Paralleling Bridge

	For Use with…	Pkg. Qty.	Catalog Number	Price U.S. $ ⑥
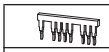	XTCE007B – XTCE015B	20	**XTCEXPBB**	
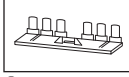	XTCE018C – XTCE032C	20	**XTCEXPBC**	
	XTCE040D – XTCE065D	10	**XTCEXPBD**	
	XTCE080F – XTCE150G	10	**XTCEXPBG**	

⑥ Orders must be placed in multiples of package quantity listed.

Discount Symbol **1CD7**

34

Reversing Bridge



Component part of Reversing Link Kit (XTCEXRL_). Reverses the phases on the load-side of two contactors.

Table 34-90. Reversing Bridge

	For Use with…	Pkg. Qty.	Catalog Number	Price U.S. $ ①
	XTCE007B – XTCE015B	20	**XTCEXRBB**	
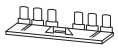	XTCE018C – XTCE032C	20	**XTCEXRBC**	
	XTCE040D – XTCE065D	10	**XTCEXRBD**	
	XTCE080F – XTCE150G	10	**XTCEXRBG**	

① Orders must be placed in multiples of package quantity listed.

Electrical Interlocking Bridge

Connects NC auxiliary contact with A2 terminal of other contactor in reversing application. Included in XTCEXRLB reversing link kit.

Table 34-91. Electrical Interlocking Bridge

For Use with…	Pkg. Qty.	Catalog Number	Price U.S. $ ②
XTCE007B – XTCE015B	20	**XTCEXLBB**	

② Orders must be placed in multiples of package quantity listed.

Star-Delta (Wye-Delta) Bridge



Component part of Star-Delta Link Kit (XTCEXSDL_). Commons the 3-phases on the line side of shorting contactor.

Table 34-92. Star-Delta (Wye-Delta) Bridge

	For Use with…	Pkg. Qty.	Catalog Number	Price U.S. $ ③
	XTCE007B – XTCE015B	20	**XTCEXSDBB** ④	
	XTCE018C – XTCE032C	20	**XTCEXSDBC**	
	XTCE040D – XTCE072D	10	**XTCEXSDBD**	
	XTCE080F – XTCE170G	1	**XTCEXSDBG**	
	XTCE185L – XTCE400M	1	**XTCEXSDB400**	
	XTCE500M	1	**XTCEXSDB500**	

③ Orders must be placed in multiples of package quantity listed.
④ Frame B is tool-less connection type.

Connector ⑤



Table 34-93. Connector

	For Use with…	Pkg. Qty.	Catalog Number	Price U.S. $ ⑥
	XTCE007B – XTCE032C	50	**XTCEXCNC**	
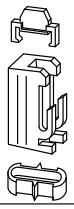	XTCE040D – XTCE150G	10	**XTCEXCNG**	

⑤ For mechanically arranging contactors in combinations. Distance between contactors is 0 mm.
⑥ Orders must be placed in multiples of package quantity listed.

Add-On Fourth Pole



Add-On Fourth Pole for use with Frame D contactors. Only for AC-1 load. Up to two auxiliary contacts can be fitted.

Table 34-94. Fourth Pole

	For Use with…	AC-1 (A) Open/ Enclosed	Pkg. Qty.	Catalog Number	Price U.S. $
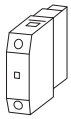	XTCE040D00_	35/30A	1	**XTCEX4P35D**	
	XTCE050D00_ XTCE065D00_ XTCE072D00_	75/60A	1	**XTCEX4P75D**	

Discount Symbol **1CD7**

Parallel Link ①②③



For using one contactor per phase. Each package comes with (2) links for line: load.

Table 34-95. Parallel Link

	For Use with…	Pkg. Qty.	Catalog Number	Price U.S. $ ④
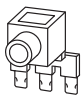	XTCE007B – XTCE015B	5	**XTCEXPLKB**	
	XTCE018C – XTCE032C	5	**XTCEXPLKC**	
	XTCE040D – XTCE072D	1	**XTCEXPLKD**	
	XTCE080F – XTCE170G	1	**XTCEXPLKG**	
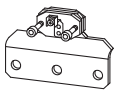	XTCE185L	1	**XTCEXPLKL185**	

① Fourth Pole can be broken off: 4-Pole: I_{th} = 60A; 3-Pole: I_{th} = 50A.
② AC-1 current carrying capacity of the contactor increases by a factor of 2.5. For XTCEXPLKL185, one shroud is included for protection against accidental contact.
③ Protected against accidental contact in accordance with IEC 536.
④ Orders must be placed in multiples of package quantity listed.

3-Phase Commoning Link

Main current wiring that parallels and commons the line side of multiple contactors. For use with Frame B contactors only. Protected against accidental contact, short-circuit proof. Max voltage (U_e) = 690V, Max Current (I_e) = 63A.

Table 34-96. 3-Phase Commoning Link

	Notes	Pkg. Qty.	Catalog Number	Price U.S. $ ⑤
	Suitable for 3 contactors, length = 135 mm	5	**XTCEXCLK3B**	
	Suitable for 4 contactors, length = 180 mm	5	**XTCEXCLK4B**	
	Suitable for 5 contactors, length = 225 mm	5	**XTCEXCLK5B**	

⑤ Orders must be placed in multiples of package quantity listed.

Incoming Terminal

Terminal for use with three-phase commoning link XTCEXCLK_B.

Table 34-97. Incoming Terminal

	For Use with…	Pkg. Qty.	Catalog Number	Price U.S. $ ⑥
	XTCE007B – XTCE015B	5	**XTCEXITB**	

⑥ Orders must be placed in multiples of package quantity listed.

Terminal Lug Assembly

For connection of: round conductor, flexible and stranded, flat strip conductor. With control circuit terminal. See **Table 34-119**, **Page 34-79** for terminal capacities.

Table 34-98. Terminal Lug Assembly

	For Use with…	Pkg. Qty.	Catalog Number	Price U.S. $
	XTCE250L – XTCE400M	1	**XTCEXTLA400**	

Terminal Lug Kit — Set of (3) Lugs



Table 34-99. Set of (3) Lugs

For Use with…	Description	Pkg. Qty.	Catalog Number	Price U.S. $
XTCE500M, XTCE570M	Set of 3 Lugs #4-500MCM 2-Phase Cu/Al 500A	1	**XTCEXTL500**	
XTCE650N	Set of 3 Lugs #2-500MCM 2-Phase Cu/Al 650A	1	**XTCEXTL650**	
XTCE820N	Set of 3 Lugs #2-500MCM 4-Phase Cu/Al 820A	1	**XTCEXTL820**	

Terminal Flat Bar

For connection of a flat strip conductor. Comes with control circuit terminal (consisting of 3 flat strip conductor terminals).

Table 34-100. Terminal Flat Bar

	For Use with…	Pkg. Qty.	Catalog Number	Price U.S. $
	XTCE500M – XTCE570M	1	**XTCEXTFB650**	
	XTCE750N – XTCE820N	1	**XTCEXTFB820**	

Note: Not UL Listed.

Discount Symbol **1CD7**

34

Control Wire Terminal Extension



Fits to Frame F – G contactors and allows connection of control wire to power terminals.

Table 34-101. Control Wire Terminal Extension

For Use with…	Pkg. Qty.	Catalog Number	Price U.S. $ ①
XTCE080F – XTCE150G	10	**XTCEXTCWG**	

① Orders must be placed in multiples of package quantity listed.

Terminal Shrouds

Protection against direct contact with connection lugs when touched vertically from the front.

Table 34-102. Terminal Shrouds

	For Use with…	Pkg. Qty.	Catalog Number	Price U.S. $
	XTCE185L – XTCE400M	1	**XTCEXTS400**	
	XTCE500M – XTCE570M	1	**XTCEXTS500**	
	XTCE580N – XTCE650N	1	**XTCEXTS650**	
	XTCE750N – XTCEC10N	1	**XTCEXTS820**	

Discount Symbol **1CD7**

Renewal Parts



Table 34-103. Replacement Coils

Voltage	Coil Suffix	Catalog Number	Price U.S. $
Frame C			
110/50 120/60	A	**XTCERENCOILCA**	
110 – 130V DC	AD	**XTCERENCOILCAD**	
220/50 240/60	B	**XTCERENCOILCB**	
200 – 240V DC	BD	**XTCERENCOILCBD**	
415/50 480/60	C	**XTCERENCOILCC**	
550/50 600/60	D	**XTCERENCOILCD**	
208/60	E	**XTCERENCOILCE**	
230/50	F	**XTCERENCOILCF**	
190/50 220/60	G	**XTCERENCOILCG**	
240/50 277/60	H	**XTCERENCOILCH**	
380/50 440/60	L	**XTCERENCOILCL**	
400/50	N	**XTCERENCOILCN**	
380/60	P	**XTCERENCOILCP**	
12/50 12/60	R	**XTCERENCOILCR**	
12 – 14V DC	RD	**XTCERENCOILCRD**	
24/50 24/60	T	**XTCERENCOILCT**	
24 – 27V DC	TD	**XTCERENCOILCTD**	
24/50	U	**XTCERENCOILCU**	
42/50 48/60	W	**XTCERENCOILCW**	
48 – 60V DC	WD	**XTCERENCOILCWD**	
48/50	Y	**XTCERENCOILCY**	
Frame D			
110/50 120/60	**A**	**XTCERENCOILDA**	
110 – 130V DC	**AD**	**XTCERENCOILDAD**	
220/50 240/60	**B**	**XTCERENCOILDB**	
200 – 240V DC	**BD**	**XTCERENCOILDBD**	
415/50 480/60	**C**	**XTCERENCOILDC**	
550/50 600/60	**D**	**XTCERENCOILDD**	
208/60	**E**	**XTCERENCOILDE**	
230/50	**F**	**XTCERENCOILDF**	
190/50 220/60	**G**	**XTCERENCOILDG**	
240/50 277/60	**H**	**XTCERENCOILDH**	
380/50 440/60	**L**	**XTCERENCOILDL**	
400/50	**N**	**XTCERENCOILDN**	
380/60	**P**	**XTCERENCOILDP**	
12/50 12/60	**R**	**XTCERENCOILDR**	
12 – 14V DC	**RD**	**XTCERENCOILDRD**	
24/50 24/60	**T**	**XTCERENCOILDT**	
24 – 27V DC	**TD**	**XTCERENCOILDTD**	
24/50	**U**	**XTCERENCOILDU**	
42/50 48/60	**W**	**XTCERENCOILDW**	
48 – 60V DC	**WD**	**XTCERENCOILDWD**	
48/50	**Y**	**XTCERENCOILDY**	
Frame F ①			
110/50 120/60	**A**	**XTCERENCOILFA**	
110 – 130V DC	**AD**	**XTCERENCOILFAD**	
220/50 240/60	**B**	**XTCERENCOILFB**	
200 – 240V DC	**BD**	**XTCERENCOILFBD**	
415/50 480/60	**C**	**XTCERENCOILFC**	
550/50 600/60	**D**	**XTCERENCOILFD**	
208/60	**E**	**XTCERENCOILFE**	
230/50	**F**	**XTCERENCOILFF**	
190/50 220/60	**G**	**XTCERENCOILFG**	
240/50 277/60	**H**	**XTCERENCOILFH**	
380/50 440/60	**L**	**XTCERENCOILFL**	
400/50	**N**	**XTCERENCOILFN**	
380/60	**P**	**XTCERENCOILFP**	
12/50 12/60	**R**	**XTCERENCOILFR**	
24/50 24/60	**T**	**XTCERENCOILFT**	
24 – 27V DC	**TD**	**XTCERENCOILFTD**	
24/50	**U**	**XTCERENCOILFU**	
42/50 48/60	**W**	**XTCERENCOILFW**	
48 – 60V DC	**WD**	**XTCERENCOILFWD**	
48/50	**Y**	**XTCERENCOILFY**	

① Frame F replacement coils can only be used with contactors having the following date codes: DC Coils, 2706 or later; AC Coils, 4706 or later.

Voltage	Coil Suffix	Catalog Number	Price U.S. $
Frame G ③			
100 – 120V 50/60	**A**	**XTCERENCOILGA**	
110 – 130V DC	**AD**	**XTCERENCOILGAD**	
190 – 240V 50/60	**B**	**XTCERENCOILGB**	
200 – 240V DC	**BD**	**XTCERENCOILGBD**	
480 – 500V 50/60	**C**	**XTCERENCOILGC**	
380 – 440V 50/60	**L**	**XTCERENCOILGL**	
4/50 24/60	**T**	**XTCERENCOILGT**	
24 – 27V DC	**TD**	**XTCERENCOILGTD**	
42 – 48V 50/60	**W**	**XTCERENCOILGW**	
48 – 60V DC	**WD**	**XTCERENCOILGWD**	
Frame L ②			
110 – 250V AC/DC	**A**	**XTCERENCOILLA**	
250 – 500V 40 – 60	**C**	**XTCERENCOILLC**	
24 – 48V DC	**TD**	**XTCERENCOILLTD**	
48 – 110V AC/DC	**Y**	**XTCERENCOILLY**	
Frame L, S-Series			
110 –120V 50/60 Hz	**A**	**XTCSRENCOILLA**	
220 – 240V 50/60 Hz	**B**	**XTCSRENCOILLB**	
Frame M ②			
110 – 250V AC/DC	**A**	**XTCERENCOILMA**	
250 – 500V 40 – 60	**C**	**XTCERENCOILMC**	
24 – 48V DC	**TD**	**XTCERENCOILMTD**	
48 – 110V AC/DC	**Y**	**XTCERENCOILMY**	
Frame M, S-Series			
110 – 120V 50/60 Hz	A	**XTCSRENCOILMA**	
220 – 240V 50/60 Hz	B	**XTCSRENCOILMB**	
Frame N ②			
110 – 250V AC/DC	**A**	**XTCERENCOILNA**	
250 – 500V 40 – 60	**C**	**XTCERENCOILNC**	
48 – 110V AC/DC	**Y**	**XTCERENCOILNY**	

② Electronic modules including coils.

③ Frame G replacement coils can only be used with contactors having date codes of 2706 or later.

Table 34-104. Replacement Contact Kits

For Use with…	Catalog Number	Price U.S. $
XTCE040D – XTCE065D	**XTCERENCONTACTD**	
XTCE185L – XTCE250L	**XTCERENCONTACTL**	
XTCE300M – XTCE570M	**XTCERENCONTACTM**	
XTCE085F – XTCE095F	**XTCERENCONTACTF**	
XTCE115G – XTCE150G	**XTCERENCONTACTG**	

Table 34-105. Replacement Vacuum Tube Assembly

For Use with…	Catalog Number	Price U.S. $
XTCE580N	**XTCERENVACT580**	
XTCE650N	**XTCERENVACT650**	
XTCE750N	**XTCERENVACT750**	
XTCE820N	**XTCERENVACT820**	

Table 34-106. Replacement Arc Chambers

For Use with…	Catalog Number	Price U.S. $
XTCE185L	**XTCERENARC185**	
XTCE225L	**XTCERENARC225**	
XTCE250L	**XTCERENARC250**	
XTCE300M	**XTCERENARC300**	
XTCE400M	**XTCERENARC400**	
XTCE500M – XTCE570M	**XTCERENARC500**	

Discount Symbol **1CD7**

Technical Data and Specifications

Contents

Description	*Page*
XTCE 3-Pole Contactors	**34-62**
XTCE Coil Data	**34-72**
XTCF 4-Pole Contactors	**34-62**
XTCF Coil Data	**34-72**
Auxiliary Contacts	**34-79**
AC Ratings	**34-80**
DC Ratings	**34-85**
Heat Loss	**34-87**
Life Curves	**34-88**
Overload Relays	**34-108**
Type 2 Coordination	**34-210**



Frame B XTCE Contactor

XT Contactors

Frame B

Table 34-107. *XT* Contactors Technical Data and Specifications — Frame B

Description	XTCE007B	XTCE009B	XTCE012B	XTCE015B
General				
Standards	IEC/EN 60947, VDE 0660, UL, CSA, CCC, RoHS			
Weights in kg [Lb]				
AC operated	0.23 [0.51]	0.23 [0.51]	0.23 [0.51]	0.23 [0.51]
DC operated	0.28 [0.62]	0.28 [0.62]	0.28 [0.62]	0.28 [0.62]
Mechanical Life	10,000,000	10,000,000	10,000,000	10,000,000
Mechanical Operating Frequency (ops/hr)				
AC operated	9000	9000	9000	5000
DC operated	9000	9000	9000	5000
Electrical Life	See Curves, **Page 34-88**			
Electrical Operating Frequency (ops/hr) — see Curve, **Page 34-88**				
AC-1; 400V I_e	800	800	800	800
AC-3; 400V I_e	1000	1000	1000	1000
AC-4; 400V I_e	300	300	300	300
Climatic Proofing	Damp heat, constant, to IEC 60068-2-78; Damp heat, cyclical, to IEC 60068-2-30			
Insulation Voltage (Ui) V AC	690	690	690	690
Impulse Withstand Voltage (Uimp) V AC	8000	8000	8000	8000
Operational Voltage (U_e) V AC	690	690	690	690
Safe Isolation to VDE 0106 Part 101 and Part 101/A1				
Between coil and contacts (V AC)	400	400	400	400
Between contacts (V AC)	400	400	400	400
Making Capacity Up to 690V (Amps) ②	112	112	144	155
Breaking Capacity (Amps)				
220/230V	70	90	120	124
380/400V	70	90	120	124
500V	50	70	100	100
660/690V	40	50	70	70
Short-Circuit Protection Rating Maximum Fuse				
Type 2 Coordination ①				
400V; gG/gL 500V	20	20	20	20
690V; gG/gL 690V	16	16	20	20
Type 1 Coordination ①				
400V; gG/gL 500V	35	35	35	63
690V; gG/gL 690V	20	20	20	50
Degree of Protection	IP20			
Protection against Direct Contact when Actuated from Front (IEC 536)	Finger- and back-of-hand proof			

① IEC 60947 Standard.

② Rated operational current: Making and breaking conditions to DC-13, L/R constant as stated.

Table 34-107. *XT* Contactors Technical Data and Specifications — Frame B (Continued)

Description	XTCE007B	XTCE009B	XTCE012B	XTCE015B
General (Continued)				
Terminal Capacity Main Cable — Screw Terminals Solid (mm^2)	1 x (0.75 – 4) 2 x (0.75 – 2.5)	1 x (0.75 – 4) 2 x (0.75 – 2.5)	1 x (0.75 – 4) 2 x (0.75 – 2.5)	1 x (0.75 – 4) 2 x (0.75 – 2.5)
Flexible with ferrule (mm^2)	1 x (0.75 – 2.5) 1 x (0.75 – 2.5)	1 x (0.75 – 2.5) 1 x (0.75 – 2.5)	1 x (0.75 – 2.5) 1 x (0.75 – 2.5)	1 x (0.75 – 2.5) 1 x (0.75 – 2.5)
Solid or Stranded (AWG)	18 – 14	18 – 14	18 – 14	18 – 14
Terminal Capacity Control Circuit Cable — Screw Terminals Solid (mm^2)	1 x (0.75 – 4) 2 x (0.75 – 2.5)	1 x (0.75 – 4) 2 x (0.75 – 2.5)	1 x (0.75 – 4) 2 x (0.75 – 2.5)	1 x (0.75 – 4) 2 x (0.75 – 2.5)
Flexible with ferrule (mm^2)	1 x (0.75 – 2.5) 1 x (0.75 – 2.5)	1 x (0.75 – 2.5) 1 x (0.75 – 2.5)	1 x (0.75 – 2.5) 1 x (0.75 – 2.5)	1 x (0.75 – 2.5) 1 x (0.75 – 2.5)
Solid or Stranded (AWG)	18 – 14	18 – 14	18 – 14	18 – 14
Main Cable and Control Circuit Cable Connection Screw/Bolt Tightening torque Nm Lb-in	M3.5 1.2 10.6	M3.5 1.2 10.6	M3.5 1.2 10.6	M3.5 1.2 10.6
Tools Main and Control circuit cable — Screw Terminals Pozidriv screwdriver Standard screwdriver	 Size 2 0.8 x 5.5 1 x 6	 Size 2 0.8 x 5.5 1 x 6	 Size 2 0.8 x 5.5 1 x 6	 Size 2 0.8 x 5.5 1 x 6
Terminal Capacity Main Circuit Cable — Spring Cage Terminals Solid (mm^2)	1 x (0.75 – 2.5) 1 x (0.75 – 2.5)	1 x (0.75 – 2.5) 1 x (0.75 – 2.5)	1 x (0.75 – 2.5) 1 x (0.75 – 2.5)	1 x (0.75 – 2.5) 1 x (0.75 – 2.5)
Flexible (mm^2)	1 x (0.75 – 2.5) 1 x (0.75 – 2.5)	1 x (0.75 – 2.5) 1 x (0.75 – 2.5)	1 x (0.75 – 2.5) 1 x (0.75 – 2.5)	1 x (0.75 – 2.5) 1 x (0.75 – 2.5)
Flexible with ferrule (mm^2)	1 x (0.75 – 2.5) 1 x (0.75 – 2.5)	1 x (0.75 – 2.5) 1 x (0.75 – 2.5)	1 x (0.75 – 2.5) 1 x (0.75 – 2.5)	1 x (0.75 – 2.5) 1 x (0.75 – 2.5)
Solid or Stranded (AWG)	18 – 14	18 – 14	18 – 14	18 – 14
Terminal Capacity Control Circuit Cable — Spring Cage Terminals Solid (mm^2)	1 x (0.75 – 2.5) 1 x (0.75 – 2.5)	1 x (0.75 – 2.5) 1 x (0.75 – 2.5)	1 x (0.75 – 2.5) 1 x (0.75 – 2.5)	1 x (0.75 – 2.5) 1 x (0.75 – 2.5)
Flexible (mm^2)	1 x (0.75 – 2.5) 1 x (0.75 – 2.5)	1 x (0.75 – 2.5) 1 x (0.75 – 2.5)	1 x (0.75 – 2.5) 1 x (0.75 – 2.5)	1 x (0.75 – 2.5) 1 x (0.75 – 2.5)
Flexible with ferrule (mm^2)	1 x (0.75 – 2.5) 1 x (0.75 – 2.5)	1 x (0.75 – 2.5) 1 x (0.75 – 2.5)	1 x (0.75 – 2.5) 1 x (0.75 – 2.5)	1 x (0.75 – 2.5) 1 x (0.75 – 2.5)
Solid or Stranded (AWG)	18 – 14	18 – 14	18 – 14	18 – 14
Tools Main and Control Circuit Cable — Spring Cage Terminals Stripping Length (mm)	 10	 10	 10	 10
Screwdriver blade width (mm)	3.5	3.5	3.5	3.5
Mounting Position, AC and DC Operated	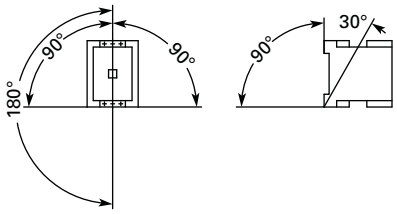			
Ambient Temperature Open Enclosed	 -25 to 60°C [-13 to 140°F] -25 to 40°C [-13 to 104°F]	 -25 to 60°C [-13 to 140°F] -25 to 40°C [-13 to 104°F]	 -25 to 60°C [-13 to 140°F] -25 to 40°C [-13 to 104°F]	 -25 to 60°C [-13 to 140°F] -25 to 40°C [-13 to 104°F]
Ambient Storage Temperature	-40 to 80°C [-40 to 176°F]	-40 to 80°C [-40 to 176°F]	-40 to 80°C [-40 to 176°F]	-40 to 80°C [-40 to 176°F]
Environmental				
Mechanical Shock Resistance (IEC/EN 60068-2-27) Half-sinusoidal shock 10 mS Main contact — NO Contact Auxiliary contact — NO Contact Auxiliary contact — NC Contact	 10g 7g 5g	 10g 7g 5g	 10g 7g 5g	 10g 7g 5g
Overvoltage Category/Pollution degree	III/3	III/3	III/3	III/3

Frame C – D

Table 34-108. *XT* Contactors Technical Data and Specifications — Frame C – D

Description	XTCE018C	XTCE025C	XTCE032C	XTCE040D	XTCE050D	XTCE065D, XTCE072D
General						
Standards	IEC/EN 60947, VDE 0660, UL, CSA, CCC, RoHS					
Weights in kg [Lb]						
AC operated	0.42 [0.93]	0.42 [0.93]	0.42 [0.93]	0.9 [2.0]	0.9 [2.0]	0.9 [2.0]
DC operated	0.48 [1.06]	0.48 [1.06]	0.48 [1.06]	1.1 [2.4]	1.1 [2.4]	1.1 [2.4]
Mechanical Life	10,000,000	10,000,000	10,000,000	10,000,000	10,000,000	10,000,000
Mechanical Operating Frequency (ops/hr)						
AC operated	5000	5000	5000	5000	5000	5000
DC operated	5000	5000	5000	5000	5000	5000
Electrical Mechanical Operating Frequency (ops/hr) — see Curve, **Page 34-88**						
AC-1; 400V I_e	800	800	800	800	800	800
AC-3; 400V I_e	800	800	800	800	800	800
AC-4; 400V I_e	300	300	300	300	300	300
Climatic Proofing	Damp heat, constant, to IEC 60068-2-78; Damp heat, cyclic, to IEC 60 068-2-30					
Insulation Voltage (U_i) V AC	690	690	690	690	690	690
Impulse Withstand Voltage (U_{imp}) V AC	8000	8000	8000	8000	8000	8000
Operating Voltage (U_e) V AC	690	690	690	690	690	690
Safe Isolation to VDE 0106 Part 101 and Part 101/A1						
Between coil and contacts (V AC)	440	440	440	440	440	440
Between contacts (V AC)	238	440	440	440	440	440
Making Capacity (Amps)	238	350	384	560	700	910
Breaking Capacity (Amps)						
220/230V	170	250	320	400	500	650
380/400V	170	250	320	400	500	650
500V	170	250	320	400	500	650
660/690V	120	150	180	250	320	370
Short-Circuit Protection Rating Maximum Fuse (Amps)						
Type 2 Coordination ①						
400V; gG/gL 500V	25	35	63	63	80	125
690V; gG/gL 690V	25	35	35	50	63	80
Type 1 Coordination ①						
400V; gG/gL 500V	63	100	125	125	160	250
690V; gG/gL 690V	50	50	63	80	80	100
Degree of Protection	IP00					
Protection against Direct Contact when Actuated from Front (IEC 536)	Finger- and back-of-hand proof					
Terminal Capacity Main Cable — Screw Terminals						
Solid (mm^2)	1 x (0.75 – 16) 2 x (0.75 – 10)	1 x (0.75 – 16) 2 x (0.75 – 10)	1 x (0.75 – 16) 2 x (0.75 – 10)	1 x (0.75 – 16) 2 x (0.75 – 10)	1 x (0.75 – 16) 2 x (0.75 – 10)	1 x (0.75 – 16) 2 x (0.75 – 10)
Flexible with ferrule (mm^2)	1 x (0.75 – 16) 2 x (0.75 – 10)	1 x (0.75 – 16) 2 x (0.75 – 10)	1 x (0.75 – 16) 2 x (0.75 – 10)	1 x (2.5 – 35) 2 x (2.5 – 25)	1 x (2.5 – 35) 2 x (2.5 – 25)	1 x (2.5 – 35) 2 x (2.5 – 25)
Stranded (mm^2)	1 x 16	1 x 16	1 x 16	1 x (16 – 50) 2 x (16 – 35)	1 x (16 – 50) 2 x (16 – 35)	1 x (16 – 50) 2 x (16 – 35)
Solid or Stranded (AWG)	18 – 6	18 – 6	18 – 6	12 – 2	12 – 2	12 – 2
Flat Conductor (Number of Segments x Width x Thickness) (mm)	—	—	—	2 x (6 x 9 x 0.8)	2 x (6 x 9 x 0.8)	2 x (6 x 9 x 0.8)
Main Cable Connection Screw/Bolt	M5	M5	M5	M6	M6	M6
Tightening torque						
Nm	3	3	3	3.3	3.3	3.3
Lb-in	26.6	26.6	26.6	29.2	29.2	29.2
Terminal Capacity Control Circuit Cable — Screw Terminals						
Solid (mm^2)	1 x (0.75 – 4) 2 x (0.75 – 4)	1 x (0.75 – 4) 2 x (0.75 – 4)	1 x (0.75 – 4) 2 x (0.75 – 4)	1 x (0.75 – 4) 2 x (0.75 – 4)	1 x (0.75 – 4) 2 x (0.75 – 4)	1 x (0.75 – 4) 2 x (0.75 – 4)
Flexible with ferrule (mm^2)	1 x (0.75 – 2.5) 2 x (0.75 – 2.5)	1 x (0.75 – 2.5) 2 x (0.75 – 2.5)	1 x (0.75 – 2.5) 2 x (0.75 – 2.5)	1 x (0.75 – 2.5) 2 x (0.75 – 2.5)	1 x (0.75 – 2.5) 2 x (0.75 – 2.5)	1 x (0.75 – 2.5) 2 x (0.75 – 2.5)
Solid or Stranded (AWG)	18 – 14	18 – 14	18 – 14	18 – 14	18 – 14	18 – 14
Control Circuit Cable Connection Screw/Bolt	M3.5	M3.5	M3.5	M3.5	M3.5	M3.5
Tightening torque						
Nm	1.2	1.2	1.2	1.2	1.2	1.2
Lb-in	10.6	10.6	10.6	10.6	10.6	10.6

① IEC 60947 Standard.

Table 34-108. *XT* Contactors Technical Data and Specifications — Frame C – D (Continued)

Description	XTCE018C	XTCE025C	XTCE032C	XTCE040D	XTCE050D	XTCE065D, XTCE072D
General (Continued)						
Tools Main and Control Circuit Cable — Screw Terminals Pozidriv screwdriver Standard screwdriver	 Size 2 0.8 x 5.5 1 x 6	 Size 2 0.8 x 5.5 1 x 6	 Size 2 0.8 x 5.5 1 x 6	 Size 2 0.8 x 5.5 1 x 6	 Size 2 0.8 x 5.5 1 x 6	 Size 2 0.8 x 5.5 1 x 6
Terminal Capacity Control Circuit Cable — Spring Cage Terminals Solid (mm^2)	 1 x (0.75 – 2.5) 2 x (0.75 – 2.5)	 1 x (0.75 – 2.5) 2 x (0.75 – 2.5)	 1 x (0.75 – 2.5) 2 x (0.75 – 2.5)	 1 x (0.75 – 2.5) 2 x (0.75 – 2.5)	 1 x (0.75 – 2.5) 2 x (0.75 – 2.5)	 1 x (0.75 – 2.5) 2 x (0.75 – 2.5)
Flexible (mm^2)	1 x (0.75 – 2.5) 2 x (0.75 – 2.5)	1 x (0.75 – 2.5) 2 x (0.75 – 2.5)	1 x (0.75 – 2.5) 2 x (0.75 – 2.5)	1 x (0.75 – 2.5) 2 x (0.75 – 2.5)	1 x (0.75 – 2.5) 2 x (0.75 – 2.5)	1 x (0.75 – 2.5) 2 x (0.75 – 2.5)
Flexible with ferrule (mm^2)	1 x (0.75 – 2.5) 2 x (0.75 – 2.5)	1 x (0.75 – 2.5) 2 x (0.75 – 2.5)	1 x (0.75 – 2.5) 2 x (0.75 – 2.5)	1 x (0.75 – 2.5) 2 x (0.75 – 2.5)	1 x (0.75 – 2.5) 2 x (0.75 – 2.5)	1 x (0.75 – 2.5) 2 x (0.75 – 2.5)
Solid or Stranded (AWG)	18 – 14	18 – 14	18 – 14	18 – 14	18 – 14	18 – 14
Tools Main and Control Circuit Cable — Spring Cage Terminals Stripping Length (mm)	 10	 10	 10	 10	 10	 10
Screwdriver blade width (mm)	3.5	3.5	3.5	3.5	3.5	3.5
Mounting Position, AC and DC operated	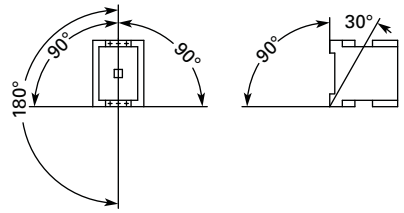			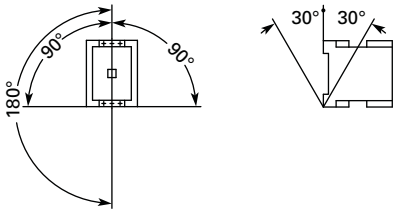		
Ambient Temperature Open Enclosed	 -25 to 60°C [-13 to 140°F] -25 to 40°C [-13 to 104°F]	 -25 to 60°C [-13 to 140°F] -25 to 40°C [-13 to 104°F]	 -25 to 60°C [-13 to 140°F] -25 to 40°C [-13 to 104°F]	 -25 to 60°C [-13 to 140°F] -25 to 40°C [-13 to 104°F]	 -25 to 60°C [-13 to 140°F] -25 to 40°C [-13 to 104°F]	 -25 to 60°C [-13 to 140°F] -25 to 40°C [-13 to 104°F]
Ambient Storage Temperature	-40 to 80°C [-40 to 176°F]	-40 to 80°C [-40 to 176°F]	-40 to 80°C [-40 to 176°F]	-40 to 80°C [-40 to 176°F]	-40 to 80°C [-40 to 176°F]	-40 to 80°C [-40 to 176°F]
Environmental						
Mechanical Shock Resistance (IEC/EN 60068-2-27) Main contact — NO Contact Auxiliary contact — NO Contact Auxiliary contact — NC Contact	 10 7 5	 10 7 5	 10 7 5	 10 7 5	 10 7 5	 10 7 5
Overvoltage Category / Pollution Degree	III/3	III/3	III/3	III/3	III/3	III/3

34

Frame F – G

Table 34-109. *XT* Contactors Technical Data and Specifications — Frame F – G

Description	XTCE080F	XTCE095F	XTCE115G	XTCE150G	XTCE170G
General					
Standards	IEC/EN 60947, VDE 0660, UL, CSA, CCC, RoHS				
Weights in kg [Lb]					
AC operated	2 [4.41]	2 [4.41]	2 [4.41]	2 [4.41]	2 [4.41]
DC operated	2.1 [4.63]	2.1 [4.63]	2.1 [4.63]	2.1 [4.63]	2.1 [4.63]
Mechanical Life	10,000,000	10,000,000	10,000,000	10,000,000	10,000,000
Mechanical Operating Frequency (ops/hr)					
AC operated	3600	3600	3600	3600	3600
DC operated	3600	3600	3600	3600	3600
Electrical Mechanical Operating Frequency (ops/hr) — see Curve, **Page 34-88**					
AC-1; 400V I_e	800	800	800	800	800
AC-3; 400V I_e	800	800	800	800	800
AC-4; 400V I_e	300	300	300	300	300
Climatic Proofing	Damp heat, constant, to IEC 60068-2-78; Damp heat, cyclic, to IEC 60 068-2-30				
Insulation Voltage (U_i) V AC	1000	1000	1000	1000	1000
Impulse Withstand Voltage (U_{imp}) V AC	8000	8000	8000	8000	8000
Operational Voltage (U_e) V AC	1000	1000	1000	1000	1000
Safe Isolation to VDE 0106 Part 101 and Part 101/A1					
Between coil and contacts (V AC)	690	690	690	690	690
Between contacts (V AC)	690	690	690	690	690
Making Capacity (Amps)	1120	1330	1610	2100	2100
Breaking Capacity (Amps)					
220/230V	800	950	1150	1500	1500
380/400V	800	950	1150	1500	1500
500V	800	950	1150	1500	1500
660/690V	650	800	1100	1200	1320
1000V	—	—	—	—	—
Short-Circuit Protection Rating Maximum Fuse					
Type 2 Coordination ①					
400V; gG/gL 500V	160	160	250	250	400
690V; gG/gL 690V	160	160	250	250	250
Type 1 Coordination ①					
400V; gG/gL 500V	250	250	250	250	400
690V; gG/gL 690V	200	200	250	250	250
Degree of Protection	IP00				
Protection Against Direct Contact when Actuated from Front (IEC 536)	Finger- and back-of-hand proof				
Terminal Capacity Main Cable — Screw Terminals					
Solid (mm^2)	—	—	—	—	—
Flexible with ferrule (mm^2)	1 x (10 – 95) 2 x (10 – 70)	1 x (10 – 95) 2 x (10 – 70)	1 x (10 – 95) 2 x (10 – 70)	1 x (10 – 95) 2 x (10 – 70)	1 x (10 – 95) 2 x (10 – 70)
Stranded (mm^2)	1 x (16 – 120) 2 x (16 – 95)	1 x (16 – 120) 2 x (16 – 95)	1 x (16 – 120) 2 x (16 – 95)	1 x (16 – 120) 2 x (16 – 95)	1 x (16 – 120) 2 x (16 – 95)
Flat Conductor (Number of Segments x Width x Thickness) (mm)	2 x (6 x 16 x 0.8)	2 x (6 x 16 x 0.8)	2 x (6 x 16 x 0.8)	2 x (6 x 16 x 0.8)	2 x (6 x 16 x 0.8)
Solid or Stranded (AWG)	8 – 250 MCM	8 – 250 MCM	8 – 250 MCM	8 – 250 MCM	8 – 250 MCM
Main Cable Connection Screw/Bolt	M10	M10	M10	M10	M10
Tightening torque					
Nm	14	14	14	14	14
Lb-in	123.9	123.9	123.9	123.9	123.9
Terminal Capacity Control Circuit Cable — Screw Terminals					
Solid (mm^2)	1 x (0.75 – 4) 1 x (0.75 – 4)	1 x (0.75 – 4) 1 x (0.75 – 4)	1 x (0.75 – 4) 1 x (0.75 – 4)	1 x (0.75 – 4) 1 x (0.75 – 4)	1 x (0.75 – 4) 1 x (0.75 – 4)
Flexible with ferrule (mm^2)	1 x (0.75 – 2.5) 2 x (0.75 – 2.5)	1 x (0.75 – 2.5) 2 x (0.75 – 2.5)	1 x (0.75 – 2.5) 2 x (0.75 – 2.5)	1 x (0.75 – 2.5) 2 x (0.75 – 2.5)	1 x (0.75 – 2.5) 2 x (0.75 – 2.5)
Solid or Stranded (AWG)	18 – 14	18 – 14	18 – 14	18 – 14	18 – 14
Control Circuit Cable Connection Screw/Bolt	M3.5	M3.5	M3.5	M3.5	M3.5
Tightening torque					
Nm	1.2	1.2	1.2	1.2	1.2
Lb-in	10.6	10.6	10.6	10.6	10.6

① IEC 60947 Standard.

Table 34-109. *XT* Contactors Technical Data and Specifications — Frame F – G (Continued)

Description	XTCE080F	XTCE095F	XTCE115G	XTCE150G	XTCE170G
General (Continued)					
Tools Main Circuit Cable — Screw Terminals Hexagon Socket-Head Spanner (mm) Control Circuit Cable — Screw Terminals Pozidriv screwdriver Standard screwdriver	 5 Size 2 0.8 x 5.5 1 x 6	 5 Size 2 0.8 x 5.5 1 x 6	 5 Size 2 0.8 x 5.5 1 x 6	 5 Size 2 0.8 x 5.5 1 x 6	 5 Size 2 0.8 x 5.5 1 x 6
Terminal Capacity Control Circuit Cable — Spring Cage Terminals Solid (mm^2)	 1 x (0.75 – 2.5) 2 x (0.75 – 2.5)	 1 x (0.75 – 2.5) 2 x (0.75 – 2.5)	 1 x (0.75 – 2.5) 2 x (0.75 – 2.5)	 1 x (0.75 – 2.5) 2 x (0.75 – 2.5)	 1 x (0.75 – 2.5) 2 x (0.75 – 2.5)
Flexible (mm^2)	1 x (0.75 – 2.5) 2 x (0.75 – 2.5)	1 x (0.75 – 2.5) 2 x (0.75 – 2.5)	1 x (0.75 – 2.5) 2 x (0.75 – 2.5)	1 x (0.75 – 2.5) 2 x (0.75 – 2.5)	1 x (0.75 – 2.5) 2 x (0.75 – 2.5)
Flexible with ferrule (mm^2)	1 x (0.75 – 2.5) 2 x (0.75 – 2.5)	1 x (0.75 – 2.5) 2 x (0.75 – 2.5)	1 x (0.75 – 2.5) 2 x (0.75 – 2.5)	1 x (0.75 – 2.5) 2 x (0.75 – 2.5)	1 x (0.75 – 2.5) 2 x (0.75 – 2.5)
Solid or Stranded (AWG)	18 – 14	18 – 14	18 – 14	18 – 14	18 – 14
Tools Control Circuit Cable — Spring Cage Terminals Stripping Length (mm)	 10	 10	 10	 10	 10
Screwdriver blade width (mm)	3.5	3.5	3.5	3.5	3.5
Mounting Position, AC and DC operated	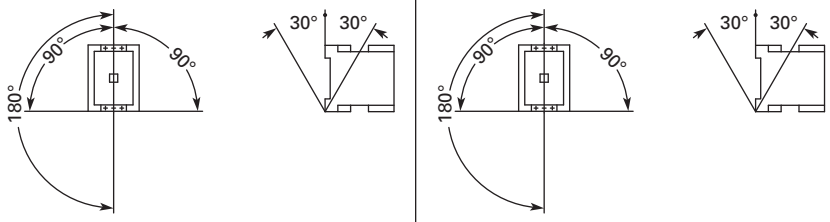				
Ambient Temperature Open Enclosed	 -25 to 60°C [-13 to 140°F] -25 to 40°C [-13 to 104°F)	 -25 to 60°C [-13 to 140°F] -25 to 40°C [-13 to 104°F)	 -25 to 60°C [-13 to 140°F] -25 to 40°C [-13 to 104°F)	 -25 to 60°C [-13 to 140°F] -25 to 40°C [-13 to 104°F)	 -25 to 60°C [-13 to 140°F] -25 to 40°C [-13 to 104°F)
Ambient Storage Temperature	-40 to 80°C [-40 to 176°F]	-40 to 80°C [-40 to 176°F]	-40 to 80°C [-40 to 176°F]	-40 to 80°C [-40 to 176°F]	-40 to 80°C [-40 to 176°F]
Environmental					
Mechanical Shock Resistance (IEC/EN 60068-2-27) Half-sinusoidal shock 10 mS Main contact — NO Contact Auxiliary contact — NO Contact Auxiliary contact — NC Contact	 10g 7g 5g	 10g 7g 5g	 10g 7g 5g	 10g 7g 5g	 10g 7g 5g
Overvoltage Category/Pollution Degree	III/3	III/3	III/3	III/3	III/3

Frame L – M

Table 34-110. *XT* Contactors Technical Data and Specifications — Frame L – M

Description	XTCE185L, XTCS185L	XTCE225L, XTCS225L	XTCE250L, XTCS250L	XTCE300M, XTCS300M	XTCE400M, XTCS400M	XTCE500M, XTCS500M	XTCE570M, XTCS570M
General							
Standards	IEC/EN 60947, VDE 0660, UL, CSA						
Weights in kg [Lb]	6.5 [14.3]	6.5 [14.3]	6.5 [14.3]	8 [18]	8 [18]	8 [18]	8 [18]
Mechanical Life	10,000,000	10,000,000	10,000,000	7,000,000	7,000,000	7,000,000	7,000,000
Mechanical Operating Frequency (ops/hr)							
AC operated	3000	3000	3000	2000	2000	2000	2000
DC operated	3000	3000	3000	2000	2000	2000	2000
Mechanical Operating Frequency (ops/hr)	See **Figure 34-45** on **Page 34-90**.						
Climatic Proofing	Damp heat, constant, to IEC 60068-2-78; Damp heat, cyclic, to IEC 60 068-2-30						
Insulation Voltage (U_i) V AC	1000	1000	1000	1000	1000	1000	1000
Impulse Withstand Voltage (U_{imp}) V AC	8000	8000	8000	8000	8000	8000	8000
Operating Voltage (U_e) V AC	1000	1000	1000	1000	1000	1000	1000
Safe Isolation to VDE 0106 Part 101 and Part 101/A1							
Between coil and contacts (V AC)	500	500	500	500	500	500	500
Between contacts (V AC)	500	500	500	500	500	500	500
Making Capacity (Amps)	3000	3000	3000	5500	5500	5500	5500
Breaking Capacity (Amps)							
220/230V	2500	2500	2500	5000	5000	5000	5000
380/400V	2500	2500	2500	5000	5000	5000	5000
500V	2500	2500	2500	5000	5000	5000	5000
660/690V	2500	2500	2500	5000	5000	5000	5000
1000V	760	760	760	950	950	950	950
Short-Circuit Protection Rating Maximum Fuse							
Type 2 Coordination ②							
400V; gG/gL 500V	315	315	315	500	500	500	500
690V; gG/gL 690V	315	315	315	500	500	500	500
1000V; gG/gL 1000V	160	160	160	200	200	200	200
Type 1 Coordination ②							
400V; gG/gL 500V	400	400	400	630	630	630	630
690V; gG/gL 690V	400	400	400	630	630	630	630
1000V; gG/gL 1000V	200	200	200	250	250	250	250
Degree of Protection	IP00						
Protection Against Direct Contact when Actuated from Front (Iec 536)	Finger- and back-of-hand proof with terminal shroud or terminal block.						
Main Cable Cross-Section							
Flexible with cable lug (mm^2)	35 – 95	50 – 240	50 – 240	50 – 240	50 – 240	50 – 240	50 – 240
Stranded with cable lug (mm^2)	50 – 120	70 – 240	70 – 240	70 – 240	70 – 240	70 – 240	70 – 240
Solid or Stranded (AWG)		1/0 – 250 MCM ①	1/0 – 250 MCM ①	1/0 – 250 MCM ①	1/0 – 250 MCM ①	1/0 – 250 MCM ①	1/0 – 250 MCM ①
Flat Conductor (mm)							
Busbar — Width in mm	20	20	25	25	25	30	30
Main Cable Connection Screw/Bolt	M10	M10	M10	M10	M10	M10	M10
Tightening torque							
Nm	24	24	24	24	24	24	24
Lb-in	213	213	213	213	213	213	213
Control Circuit Cable Cross-Sections							
Solid (mm^2)	1 x (0.75 – 2.5)	1 x (0.75 – 2.5)	1 x (0.75 – 2.5)	1 x (0.75 – 2.5)	1 x (0.75 – 2.5)	1 x (0.75 – 2.5)	1 x (0.75 – 2.5)
	2 x (0.75 – 2.5)	2 x (0.75 – 2.5)	2 x (0.75 – 2.5)	2 x (0.75 – 2.5)	2 x (0.75 – 2.5)	2 x (0.75 – 2.5)	2 x (0.75 – 2.5)
Flexible with ferrule (mm^2)	1 x (0.75 – 2.5)	1 x (0.75 – 2.5)	1 x (0.75 – 2.5)	1 x (0.75 – 2.5)	1 x (0.75 – 2.5)	1 x (0.75 – 2.5)	1 x (0.75 – 2.5)
	2 x (0.75 – 2.5)	2 x (0.75 – 2.5)	2 x (0.75 – 2.5)	2 x (0.75 – 2.5)	2 x (0.75 – 2.5)	2 x (0.75 – 2.5)	2 x (0.75 – 2.5)
Solid or Stranded (AWG)	2 x (18 – 12)	2 x (18 – 12)	2 x (18 – 12)	2 x (18 – 12)	2 x (18 – 12)	2 x (18 – 12)	2 x (18 – 12)
Control Circuit Cable Connection Screw/Bolt	M3.5	M3.5	M3.5	M3.5	M3.5	M3.5	M3.5
Tightening torque							
Nm	1.2	1.2	1.2	1.2	1.2	1.2	1.2
Lb-in	10.6	10.6	10.6	10.6	10.6	10.6	10.6
Tools							
Main cable wrench	16 mm	16 mm	16 mm	16 mm	16 mm	16 mm	16 mm
Control circuit cable pozidriv screwdriver	Size 2	Size 2	Size 2	Size 2	Size 2	Size 2	Size 2

① Screw tightening with flat cable terminal or cable terminal blocks. See terminal capacity for cable terminal blocks.
② IEC 60947 Standard.

Table 34-110. *XT* Contactors Technical Data and Specifications — Frame L – M (Continued)

Description	XTCE185L, XTCS185L	XTCE225L, XTCS225L	XTCE250L, XTCS250L	XTCE300M, XTCS300M	XTCE400M, XTCS400M	XTCE500M, XTCS500M	XTCE570M, XTCS570M
General (Continued)							
Mounting Position, AC and DC Operated	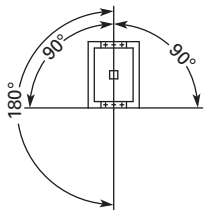 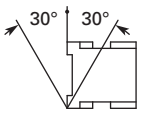					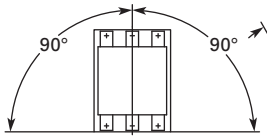 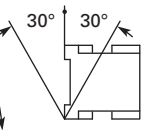	
Ambient Temperature	-25 to 60°C [-13 to 140°F]	-25 to 60°C [-13 to 140°F]	-25 to 60°C [-13 to 140°F]	-25 to 60°C [-13 to 140°F]	-25 to 60°C [-13 to 140°F]	-25 to 60°C [-13 to 140°F]	-25 to 60°C [-13 to 140°F]
Ambient Storage Temperature	-40 to 80°C [-40 to 176°F]	-40 to 80°C [-40 to 176°F]	-40 to 80°C [-40 to 176°F]	-40 to 80°C [-40 to 176°F]	-40 to 80°C [-40 to 176°F]	-40 to 80°C [-40 to 176°F]	-40 to 80°C [-40 to 176°F]
Environmental							
Mechanical Shock Resistance (IEC/EN 60068-2-27) Half-sinusoidal shock 10 mS							
Main contact — NO Contact	10g	10g	10g	10g	10g	10g	10g
Auxiliary contact — NO Contact	10g	10g	10g	10g	10g	10g	10g
Auxiliary contact — NC Contact	8g	8g	8g	8g	8g	8g	8g
Overvoltage Category/ Pollution Degree	III/3	III/3	III/3	III/3	III/3	III/3	III/3
Switching Capacity, kVar ① Individual Compensation							
230V	87	—	—	115	—	—	—
400/420/440V	150	—	—	200	—	—	—
525V	190	—	—	265	—	—	—
690V	150	—	—	200	—	—	—
Group Compensation, with Choke							
230V	80	100	110	130	160	160	160
400/420/440V	150	175	190	225	280	280	280
525V	200	230	260	290	370	370	370
690V	260	300	340	390	480	480	480
Group Compensation, without Choke							
230V	66	—	—	85	—	—	—
400/420/440V	115	—	—	150	—	—	—
525V	145	—	—	195	—	—	—
690V	115	—	—	150	—	—	—

① When using contactors for group compensation, a minimum inductance of approx. 6 uh per capacitor must be available to limit the high inrush current peaks. This corresponds to an air-cored coil with 5 windings and a coil diameter of approximately 140 mm. The conductor cross-section must be selected according to the rated current per phase.

34

Frame N – R

Table 34-111. *XT* Contactors Technical Data and Specifications — Frame N – R

Description	XTCE580N	XTCE650N	XTCE750N, XTCE820N	XTCEC10N	XTCEC14P	XTCEC16R, XTCEC20R
General						
Standards	IEC/EN 60947, VDE 0660, UL, CSA					
Weights in kg [Lb]	15 [33]	15 [33]	15 [33]	15 [33]	15, [33]	32 [70]
Mechanical Life	5,000,000	5,000,000	5,000,000	5,000,000	5,000,000	5,000,000
Mechanical Operating Frequency (ops/hr)						
AC operated	1000	1000	1000	1000	1000	1000
DC operated	1000	1000	1000	1000	1000	1000
Maximum Operating frequency (ops/hr)	See **Figure 34-45** on **Page 34-90**.					
Climatic Proofing	Damp heat, constant, to IEC 60068-2-78; Damp heat, cyclic, to IEC 60 068-2-30					
Insulation Voltage (U_i) V AC	1000	1000	1000	1000	1000	1000
Impulse Withstand Voltage (U_{imp}) V AC	8000	8000	8000	8000	8000	8000
Operating Voltage (U_e) V AC	1000	1000	1000	1000	1000	1000
Safe Isolation to VDE 0106 Part 101 and Part 101/A1						
Between coil and contacts (V AC)	500	500	500	500	500	500
Between contacts (V AC)	500	500	500	500	500	500
Making Capacity (Amps)	7800	7800	9840	9840	9840	19000, 9840
Breaking Capacity (Amps)						
220/230V	6500	6500	8200	8200	8200	16000, 8200
380/400V	6500	6500	8200	8200	8200	16000, 8200
500V	6500	6500	8200	8200	8200	16000, 8200
660/690V	6500	6500	8200	8200	8200	16000, 8200
1000V	4350	4350	5800	5800	5800	5800
Short-Circuit Protection Rating Maximum Fuse						
Type 2 Coordination ②						
400V; gG/gL 500V	630	630	630	630	—	—
690V; gG/gL 690V	630	630	630	630	—	—
1000V; gG/gL 1000V	500	500	630	630	—	—
Type 1 Coordination ②						
400V; gG/gL 500V	1000	1000	1200	1200	—	—
690V; gG/gL 690V	1000	1000	1200	1200	—	—
1000V; gG/gL 1000V	630	630	800	800	—	—
Degree of Protection	IP00					
Protection Against Direct Contact when Actuated from Front (Iec 536)	Finger- and back-of-hand proof with terminal shroud or terminal block.					
Main Cable Cross-Section						
Flexible with cable lug (mm^2)	50-240	50-240	50-240	50-240	50-240	50-240
Stranded with cable lug (mm^2)	70-240	70-240	70-240	70-240	70-240	70-240
Solid or Stranded (AWG)	2/0 – 500 MCM	2/0 – 500 MCM	2/0 – 500 MCM	2/0 – 500 MCM	2/0 – 500 MCM	2/0 – 500 MCM
Flat Conductor (mm)	①	①	①	①	①	①
Busbar — Width in mm	50	50	50	50	50	50
Main Cable Connection Screw/Bolt	M10	M10	M12	M12	M12	M12
Tightening torque						
Nm	24	24	35	35	35	35
Lb-in	213	213	311	311	311	311
Control Circuit Cable Cross-Sections						
Solid (mm^2)	1 x (0.75 – 2.5)	1 x (0.75 – 2.5)	1 x (0.75 – 2.5)	1 x (0.75 – 2.5)	1 x (0.75 – 2.5)	1 x (0.75 – 2.5)
	2 x (0.75 – 2.5)	2 x (0.75 – 2.5)	2 x (0.75 – 2.5)	2 x (0.75 – 2.5)	2 x (0.75 – 2.5)	2 x (0.75 – 2.5)
Flexible with ferrule (mm^2)	1 x (0.75 – 2.5)	1 x (0.75 – 2.5)	1 x (0.75 – 2.5)	1 x (0.75 – 2.5)	1 x (0.75 – 2.5)	1 x (0.75 – 2.5)
	2 x (0.75 – 2.5)	2 x (0.75 – 2.5)	2 x (0.75 – 2.5)	2 x (0.75 – 2.5)	2 x (0.75 – 2.5)	2 x (0.75 – 2.5)
Solid or Stranded (AWG)	2 x (18 – 12)	2 x (18 – 12)	2 x (18 – 12)	2 x (18 – 12)	2 x (18 – 12)	2 x (18 – 12)
Control Circuit Cable Connection Screw/Bolt	M3.5	M3.5	M3.5	M3.5	M3.5	M3.5
Tightening torque						
Nm	1.2	1.2	1.2	1.2	1.2	1.2
Lb-in	10.6	10.6	10.6	10.6	10.6	10.6

① Screw tightening with flat cable terminal or cable terminal blocks. See terminal capacity for cable terminal blocks.
② IEC 60947 Standard.

Table 34-111. *XT* Contactors Technical Data and Specifications — Frame N – R (Continued)

Description	XTCE580N	XTCE650N	XTCE750N, XTCE820N	XTCEC10N	XTCEC14P	XTCEC16R, XTCEC20R
General (Continued)						
Tools Main cable wrench Control circuit cable pozidriv screwdriver	 16 mm Size 2	 16 mm Size 2	 18 mm Size 2	 18 mm Size 2	 18 mm Size 2	 18 mm Size 2
Mounting Position, AC and DC Operated	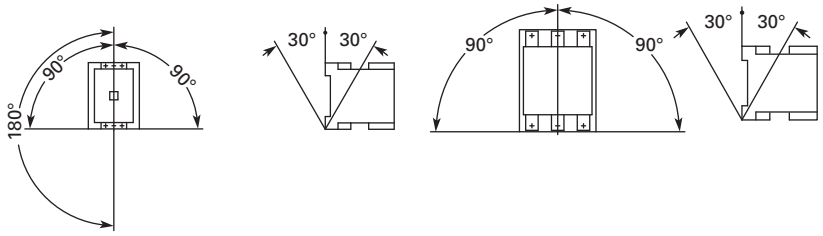					
Ambient Temperature	-25 to 60°C [-13 to 140°F]	-25 to 60°C [-13 to 140°F]	-25 to 60°C [-13 to 140°F]	-25 to 60°C [-13 to 140°F]	-25 to 60°C [-13 to 140°F]	-25 to 60°C [-13 to 140°F]
Ambient Storage Temperature	-40 to 80°C [-40 to 176°F]	-40 to 80°C [-40 to 176°F]	-40 to 80°C [-40 to 176°F]	-40 to 80°C [-40 to 176°F]	-40 to 80°C [-40 to 176°F]	-40 to 80°C [-40 to 176°F]
Environmental						
Mechanical Shock Resistance (IEC/EN 60068-2-27) Half-sinusoidal shock 10 mS (g) Main contact — NO Contact Auxiliary contact — NO Contact Auxiliary contact — NC Contact	 10 10 8	 10 10 8	 10 10 8	 10 10 8	 10 10 8	 10 10 8
Overvoltage Category/Pollution Degree	III/3	III/3	III/3	III/3	III/3	III/3
Switching Capacity, kVar ① Individual Compensation 230V 400/420/440V 525V 690V	 175 300 400 300	 — — — —	 — — — —	 — — — —	 — — — —	 — — — —

① When using contactors for group compensation, a minimum inductance of approx. 6 uh per capacitor must be available to limit the high inrush current peaks. This corresponds to an air-cored coil with 5 windings and a coil diameter of approximately 140 mm. The conductor cross-section must be selected according to the rated current per phase.

Instructional Leaflets

Table 34-112. Instructional Leaflets

Publication Number	Description
Pub51210	7 – 15A, B Frame XTCE, XTCEC and XTCF Contactors and Accessories (Inside of Packaging)
Pub51211	18 – 32A, C Frame XTCE and XTCEC Contactors and Accessories (Inside of Packaging)
Pub51221	XTOB, D Frame Overload Relays (Inside of Packaging)
Pub51222	XTOB, B – C Frame Overload Relays (Inside of Packaging)
Pub51237	7 – 12A, B Frame XTCE Contactors and Auxiliary Contacts
Pub51232	18 – 32A, C Frame XTCE Contactors and Auxiliary Contacts
Pub51216	40 – 65A, D Frame XTCE Contactors and Auxiliary Contacts
Pub51203	185 – 500A, L – M Frame XTCE Contactors and Auxiliary Contacts
Pub51215	S-Series 185 – 500A, L – M Frame XTCE Contactors and Auxiliary Contacts
Pub51204	580 – 1000A, N Frame XTCE Contactors and Auxiliary Contacts
Pub51209	1400 – 2000A, P – R Frame XTCE Contactors and Auxiliary Contacts
Pub51213	7 – 150A, B – G Frame XTAE Non-reversing and XTAR Reversing Starters
Pub51217	XTCEXFA and XTCEXSA Front and Side Mount Auxiliary Contacts from 40 – 150A, D – G Frame XTCE Contactors
Pub51212	XTCEXML Mechanical Interlock for 7 – 150A, B – G Frame XTCE Contactors
Pub51214	XTCEXRL Reversing Link Kits for 18 – 32A, C Frame XTCE Contactors
Pub51218	XTCEXTL Lug Kits for 500 – 820A, M – N Frame XTCE Contactors
Pub51219	XTCEXRLB and XTCEXSDLB Reversing and Star-Delta (Wye-Delta) Link Kits for 7 – 12A, B Frame XTCE Contactors
Pub51205	Accessories for 185 – 500A, L – M Frame XTCE Contactors
Pub51207	Replacement DC Coils
Pub51213	Renewal Parts — Coils for 18 – 32A, C Frame XTCE Contactors
Pub51186	Renewal Parts — Coils for 40 – 65A, D Frame XTCE Contactors

Coil Data

Frame B – D

Table 34-113. Coil Data — Frame B – D

Description	XTCE007B	XTCE009B	XTCE012B, XTCF020B	XTCE015B	XTCE018C	XTCE025C	XTCE032C	XTCE040D	XTCE050D	XTCE065D, XTCE072D
Voltage Tolerance										
Pick-Up (x U_C)										
AC operated	0.8 – 1.1	0.8 – 1.1	0.8 – 1.1	0.8 – 1.1	0.8 – 1.1	0.8 – 1.1	0.8 – 1.1	0.8 – 1.1	0.8 – 1.1	0.8 – 1.1
DC operated	0.8 – 1.1 ①	0.8 – 1.1 ①	0.8 – 1.1 ①	0.8 – 1.1 ①	0.7 – 1.2 ②	0.7 – 1.2 ②	0.7 – 1.2 ②	0.7 – 1.2 ②	0.7 – 1.2 ②	0.7 – 1.2 ②
Drop-Out (x U_C)										
AC operated	0.3 – 0.6	0.3 – 0.6	0.3 – 0.6	0.3 – 0.6	0.3 – 0.6	0.3 – 0.6	0.3 – 0.6	0.3 – 0.6	0.3 – 0.6	0.3 – 0.6
DC operated	0.15 – 0.6	0.15 – 0.6	0.15 – 0.6	0.15 – 0.6	0.15 – 0.6	0.15 – 0.6	0.15 – 0.6	0.15 – 0.6	0.15 – 0.6	0.15 – 0.6
Power Consumption of the coil at cold state and 1.0 x U_C										
AC operated										
Single-voltage coil 50 Hz										
Pick-Up VA	24	24	24	24	52	52	52	149	149	149
Pick-Up W	19	19	19	19	40	40	40	80	80	80
Sealing VA	3.4	3.4	3.4	3.4	7.1	7.1	7.1	16	16	16
Sealing W	1.2	1.2	1.2	1.2	2.1	2.1	2.1	4.3	4.3	4.3
Single-voltage coil 60 Hz										
Pick-Up VA	30	30	30	30	67	67	67	178	178	178
Pick-Up W	23	23	23	23	50	50	50	117	117	117
Sealing VA	4.4	4.4	4.4	4.4	8.7	8.7	8.7	19	19	19
Sealing W	1.4	1.4	1.4	1.4	2.6	2.6	2.6	5.3	5.3	5.3
50/60 Hz										
Pick-Up VA	27	27	27	27	62	62	62	168	168	168
	25	25	25	25	58	58	58	154	154	154
Pick-Up W	22	22	22	22	48	48	48	120	120	120
	21	21	21	21	43	43	43	43	43	43
Sealing VA	4.2	4.2	4.2	4.2	9.1	9.1	9.1	22	22	22
	3.3	3.3	3.3	3.3	6.5	6.5	6.5	14	14	14
Sealing W	1.4	1.4	1.4	1.4	2.5	2.5	2.5	5.3	5.3	5.3
	1.2	1.2	1.2	1.2	2	2	2	4.3	4.3	4.3
DC operated										
Pick-Up W	3	3	4.5	4.5	12 at 24V	12 at 24V	12 at 24V	24 at 24V	24 at 24V	24 at 24V
Sealing W	3	3	4.5	4.5	0.5 at 24V	0.5 at 24V	0.5 at 24V	0.5 at 24V	0.5 at 24V	0.5 at 24V
Duty Factor (%DF)	100	100	100	100	100	100	100	100	100	100
Switching Time at 100% U_C (approximate values)										
Main Contact										
AC operated										
Closing delay (mS)	<21	<21	<21	<21	<22	<22	<22	<18	<18	<18
Opening delay (mS)	<18	<18	<18	<18	<14	<14	<14	<13	<13	<13
DC operated										
Closing delay (mS)	<31	<31	<31	<31	<47	<47	<47	<54	<54	<54
Opening delay (mS)	<12	<12	<12	<12	<30	<30	<30	<24	<24	<24
Arcing time (mS)	10	10	10	10	10	10	10	10	10	10
Electromagnetic Compatibility (EMC)										
Emitted interference	To EN-60947-1									
Noise Immunity	To EN-60947-1									

① 0.7 – 1.3 without additional auxiliary contact modules and ambient temperature +40°C [104°F].

② Coil Suffix TD: U_{min} 24V DC/U_{max} 27V DC.
Coil Suffix WD: U_{min} 48V DC/U_{max} 60V DC.
Coil Suffix AD: U_{min} 110V DC/U_{max} 130V DC.
Coil Suffix BD: U_{min} 200V DC/U_{max} 240V DC.
Example:
$U_C = 0.7 \times U_{min}$ — $1.2 \times U_{max}$
$U_C = 0.7 \times 24V$ — $1.2 \times 27V$ DC

Frame F – G

Table 34-114. Coil Data — Frame F – G

Description	XTCE80F	XTCE95F	XTCE115G	XTCE150G	XTCE170G
Voltage Tolerance					
Pick-Up (x U_C)					
AC operated	0.8 – 1.1	0.8 – 1.1	0.8 – 1.1	0.8 – 1.1	0.8 – 1.1
DC operated	0.7 – 1.2 ①	0.7 – 1.2 ①	0.7 – 1.2 ①	0.7 – 1.2 ①	0.7 – 1.2 ①
Drop-Out (x U_C)					
AC operated	0.3 – 0.6	0.3 – 0.6	0.25 – 0.6	0.25 – 0.6	0.25 – 0.6
DC operated	0.15 – 0.6	0.15 – 0.6	0.15 – 0.6	0.15 – 0.6	0.15 – 0.6
Power Consumption of the coil at cold state and 1.0 x U_C					
AC operated					
Single-voltage coil 50 Hz					
Pick-Up VA	310	310	180	180	180
Pick-Up W	165	165	130	130	130
Sealing VA	26	26	3.1	3.1	3.1
Sealing W	5.8	5.8	2.1	2.1	2.1
Single-voltage coil 60 Hz					
Pick-Up VA	345	345	170	170	170
Pick-Up W	190	190	130	130	130
Sealing VA	30	30	3.1	3.1	3.1
Sealing W	7.1	7.1	2.1	2.1	2.1
50/60 Hz					
Pick-Up VA	372	328	170	170	170
Pick-Up W	190	190	130	130	130
Sealing VA	37.1	22.6	3.1	3.1	3.1
Sealing W	7.5	6.1	2.1	2.1	2.1
DC operated					
Pick-Up W	90 at 24V	90 at 24V	149 at 24V	149 at 24V	149 at 24V
Sealing W	1.3 at 24V	1.3 at 24V	2.1 at 24V	2.1 at 24V	2.1 at 24V
Duty Factor (%DF)	100	100	100	100	100
Switching Time at 100% U_C (approximate values)					
Main Contact					
AC operated					
Closing delay (mS)	<20	<20	<33	<33	<33
Opening delay (mS)	<14	<14	<41	<41	<41
DC operated					
Closing delay (mS)	<45	<45	<35	<35	<35
Opening delay (mS)	<34	<34	<30	<30	<30
Arcing Time (mS)	15	15	15	15	15
Permissible Residual Current with Actuation of A1 – A2 By the Electronics (with 0 signal) (mA)	≤1	≤1	≤1	≤1	≤1
Electromagnetic Compatibility (EMC)					
Emitted interference	To EN60947-1				
Noise Immunity	To EN60947-1				

① At 24V: 0.7 – 1.3 without additional auxiliary contact modules and ambient temperature +40°C [104°F].

34

Frame L – R

Table 34-115. Coil Data — Frame L – R

Description	XTCE185L, XTCS185L	XTCE225L, XTCE250L, XTCS250L	XTCE300M, XTCE400M, XTCS300M	XTCE500M, XTCS500M, XTCE570M, XTCS570M
Voltage Tolerance				
Pick-Up (x U_c) XTCE185L – XTCEC20R XTCS185L – XTCS500M Drop-Out (x U_c) XTCE185L – XTCEC20R XTCS185L – XTCS500M	 0.7 x U_{cmin} — 1.15 x U_{cmax} 0.85 x U_{cmin} — 1.1 x U_{cmax} 0.2 x U_{cmin} — 0.6 x U_{cmax} 0.2 x U_{cmin} — 0.4 x U_{cmax}			
Power Consumption of the coil at cold state and 1.0 x U_C				
XTCE185L – XTCEC20R Pick-Up VA Pick-Up W Sealing VA Sealing W	 250 ① 200 4.3 3.3	 250 ① 200 4.3 3.3	 450 ① 350 4.3 3.3	 450 ① 350 4.3 3.3
XTCS185L – XTCS500M Pick-Up VA Pick-Up W Sealing VA Sealing W	 360 325 4.3 3.3	 360 325 4.3 3.3	 715 645 4.3 3.3	 715 645 4.3 3.3
Duty Factor (%DF)	100	100	100	100
Switching Time at 100% Main Contact U_C (approximate values)				
XTCE185L – XTCEC20R Closing delay (mS) Opening delay (mS) XTCS185L – XTCS500M Closing delay (mS) Opening delay (mS)	 <100 <80 <50 <40	 <100 <80 <50 <40	 <80 <80 <50 <40	 <80 <80 <50 <40
Reaction in Threshold and Sealing State Transition Range (XTCE185L – XTCEC20R)				
Voltage interruptions (0 – 0.2 x U_{cmin}) ≤ 10ms (0 – 0.2 x U_{cmin}) > 10ms	 Time is bridged successfully Drop-out of the contactor			
Voltage Dips (0.2 – 0.6 x U_{cmin}) ≤ 12ms (0.2 – 0.6 x U_{cmin}) > 12ms (0.6 – 0.7 x U_{cmin})	 Time is bridged successfully Drop-out of the contactor Contactor remains switched on			
Excess Voltage (1.15 – 1.3 x U_{cmax}) (>1.3 x U_{cmax}) ≤ 3s (>1.3 x U_{cmax}) > 3s	 Contactor remains switched on Contactor remains switched on Drop-out of the contactor			
Pick – Up phase (0 – 0.7 x U_{cmin}) (0.7 x U_{cmin} –1.15 x U_{cmax}) (>1.15 x U_{cmax})	 Contactor does not switch on Contactor switches on with certainty Contactor switches on with certainty			
Permissible contact resistance (of the external command device with actuation of A11), Ω	≤500	≤500	≤500	≤500
Permissible residual current (with actuation of A11 by the electronics with 0 signal)	≤1	≤1	≤1	≤1
SPS Signal Level (A3 – A4) to IEC/EN 61131-2 (Type 2) High Low	 15V 5V	 15V 5V	 15V 5V	 15V 5V
Electromagnetic compatibility (EMC)	This product is designed for operation in industrial environments. Usage in domestic areas can cause radio frequency interference (RFI). Noise suppression measures must be provided for the additional interference.			

① Control transformer with U_k ≤6%.

Table 34-115. Coil Data — Frame L – R (Continued)

Description	XTCE580N	XTCE750N, XTCE820N	XTCEC10N	XTCEC14P	XTCE16R, XTCEC20R
Voltage Tolerance					
Pick-Up (x U_C) XTCE185L – XTCEC20R XTCS185L – XTCS500M Drop-Out (x U_C) XTCE185L – XTCEC20R XTCS185L – XTCS500M	0.7 x U_{cmin} — 1.15 x U_{cmax} 0.85 x U_{cmin} — 1.1 x U_{cmax} 0.2 x U_{cmin} — 0.6 x U_{cmax} 0.2 x U_{cmin} — 0.4 x U_{cmax}				
Power Consumption of the coil at cold state and 1.0 x U_C					
XTCE185L – XTCEC20R Pick-Up VA Pick-Up W Sealing VA Sealing W	800 ① 700 7.5 6.5	800 ① 700 7.5 6.5	800 ① 700 7.5 6.5	800 ① 700 7.5 6.5	1600 ① 1400 15 13
XTCS185L -– XTCS500M Pick-Up VA Pick-Up W Sealing VA Sealing W	— — — —	— — — —	— — — —	— — — —	— — — —
Duty Factor (%DF)	100	100	100	100	100
Switching Time at 100% Main Contact U_C (approximate values)					
XTCE185L – XTCEC20R Closing delay (mS) Opening delay (mS) XTCS185L – XTCS500M Closing delay (mS) Opening delay (mS)	 <70 <70 — —	 <70 <70 — —	 <70 <70 — —	 <70 <40 — —	 <70 <40 — —
Reaction in Threshold and Sealing State Transition Range (XTCE185L – XTCEC20R)					
Voltage interruptions (0 – 0.2 x U_{cmin}) ≤ 10ms (0 – 0.2 x U_{cmin}) > 10ms	Time is bridged successfully Drop-out of the contactor				
Voltage Dips (0.2 – 0.6 x U_{cmin}) ≤ 12ms (0.2 – 0.6 x U_{cmin}) > 12ms (0.6 – 0.7 x U_{cmin})	Time is bridged successfully Drop-out of the contactor Contactor remains switched on				
Excess Voltage (1.15 – 1.3 x U_{cmax}) (>1.3 x U_{cmax}) ≤ 3s (>1.3 x U_{cmax}) > 3s	Contactor remains switched on Contactor remains switched on Drop-out of the contactor				
Pick – Up phase (0 – 0.7 x U_{cmin}) (0.7 x U_{cmin} –1.15 x U_{cmax}) (>1.15 x U_{cmax})	Contactor does not switch on Contactor switches on with certainty Contactor switches on with certainty				
Permissible contact resistance (of the external command device with actuation of A11), Ω	≤500	≤500	≤500	≤500	≤500
Permissible residual current (with actuation of A11 by the electronics with 0 signal)	≤1	≤1	≤1	≤1	≤1
SPS Signal Level (A3 – A4) to IEC/EN 61131-2 (Type 2) High Low	 15V 5V	 15V 5V	 15V 5V	 15V 5V	 15V 5V
Electromagnetic compatibility (EMC)	This product is designed for operation in industrial environments. Usage in domestic areas can cause radio frequency interference (RFI). Noise suppression measures must be provided for the additional interference.				

① Control transformer with U_k ≤7%.

34

Contactor Contact Travel Diagrams

The diagrams indicate the closing and travel of the contacts of the contactors and auxiliary contacts at no-load. Tolerances are not taken into consideration.

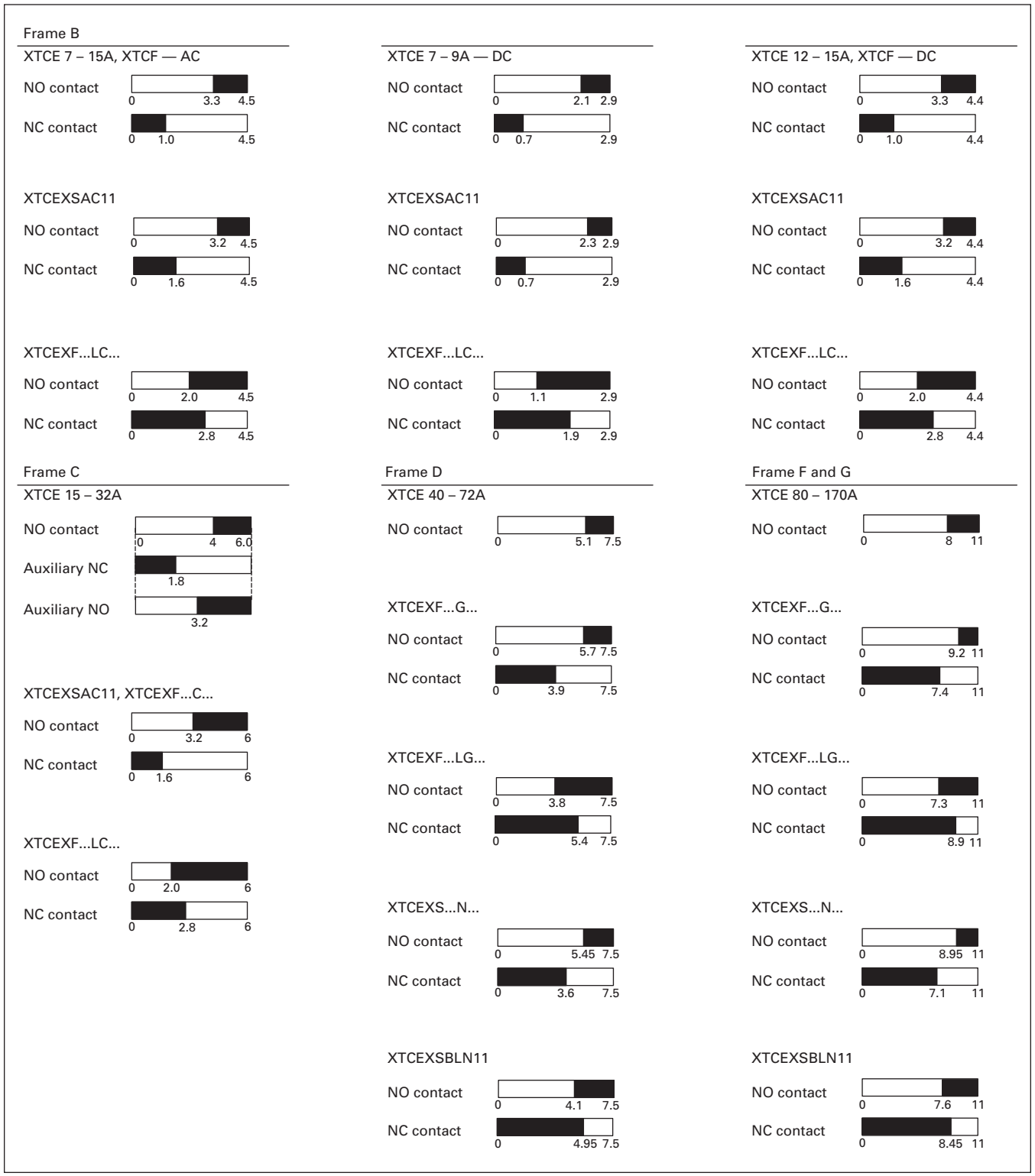

Figure 34-38. Contactor Contact Travel Diagrams

Table 34-116. *XT* Contactors Technical Data and Specifications — 4-Pole

Description	XTCF020B	XTCF032C	XTCF045C	XTCF063D	XTCF080D	XTCF125G	XTCF160G	XTCF200G
General								
Standards	IEC/EN 60947, VDE 0660, UL, CSA							
Weights in kg [Lb] AC operated DC operated	 0.22 [0.49] 0.29 [0.64]	 0.49 [1.1] 0.49 [1.1]		 1.0 [2.3] 1.0 [2.3]		 2.8 [6.2] 2.8 [6.2]		
Mechanical Life	10,000,000							
Mechanical Operating Frequency (ops/hr) AC operated DC operated	 5000 5000					 3600 3600		
Electrical Life	See Curve, **Page 34-88**							
Electrical Operating Frequency (ops/hr)	600							
Climatic Proofing	Damp heat, constant, to IEC 60068-2-3							
	Damp heat, cyclical, to IEC 60068-2-30							
Insulation Voltage (Ui) V AC	690							
Impulse Withstand Voltage (Uimp) V AC	8000							
Operation Voltage (Ue) V AC	690							
Safe Isolation to VDE 0106 Part 101 and Part 101/A1 Between coil and contacts (V AC) Between contacts (V AC)	 400 400	 440 440						
Making Capacity Up to 690V (Amps)	144	238	350	560	700	1120	1330	1800
Breaking Capacity (Amps) 220/230V 380/400V 500V 660/690V	 120 120 100 70	 180 180 180 120	 250 250 250 144	 00 400 400 250	 00 500 500 296	 800 800 800 650	 950 950 950 750	 1150 1150 1150 800
Short Circuit Protection Rating Maximum Fuse Type 2 Coordination 400V; gG/gL 500V 690V; gG/gL 690V Type 1 Coordination 400V; gG/gL 500V 690V; gG/gL 690V	 20 20 35 25	 35 35 63 50	 35 35 100 50	 63 50 125 80	 80 63 160 80	 160 160 250 200	 160 160 250 200	 250 200 250 200
Degree of Protection with Accessories	IP20	IP00						
	—			IP20				
Protection against Direct Contact when Actuated from Front (IEC 536)	Finger- and back-of-hand proof							
Terminal Capacity Main Cable - Screw Terminals Solid (mm^2)	 1 x (0.75 – 4) 2 x (0.75 – 2.5)	 1 x (0.75 – 16) 2 x (0.75 –10)		 1 x (2.5 –16) 2 x (2.5 –16)		 —		
Flexible with ferrule (mm^2)	1 x (0.75 – 2.5) 2 x (0.75 – 2.5)	1 x (0.75 – 16) 2 x (0.75 – 10)		1 x (2.5 – 35) 2 x (2.5 – 25)		1 x (10 –95) 2 x (10 – 70)		
Solid or Stranded (AWG)	18 – 14	18 – 6		12 – 2		8 - 250MCM		
Terminal Capacity Control Circuit Cable — Screw Terminals Solid (mm^2)	 1 x (0.75 – 4) 2 x (0.75 – 2.5)							
Flexible with ferrule (mm^2)	1 x (0.75 – 2.5) 2 x (0.75 – 2.5)							
Solid or Stranded (AWG)	18 – 14							
Main Cable Connection Screw/Bolt Tightening torque Nm Lb-in	 1.2 10.6	 3 26.6		 3.3 29.2		 14 123.9		
Control Circuit Cable Connection Screw/Bolt Tightening torque Nm Lb-in	 1.2 10.6							
Tools Main and Control Circuit Cable — Screw Terminals Pozidriv screwdriver Standard screwdriver	 2 0.8 x 5.5 1 x 6					 — —		

Table 34-116. *XT* Contactors Technical Data and Specifications — 4-pole (Continued)

Description	XTCF020B	XTCF032C	XTCF045C	XTCF063D	XTCF080D	XTCF125G	XTCF160G	XTCF200G
General								
Mounting Position, AC & DC Operated	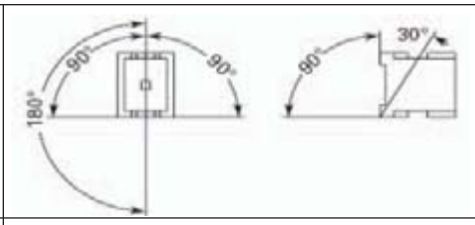							
Ambient Temperature Open	-25 to 60°C [-13 to 140°F]							
Enclosed	-25 to 40°C [-13 to 104°F]							
Ambient Storage Temperature	-40 to 80°C [-40 to 176°F]							
Environmental								
Mechanical Shock Resistance (IEC/EN 60068-2-27) Half-sinusoidal shock 10 mS Main contact - NO Contact Auxiliary contact - NO Contact Auxiliary contact - NC Contact	 10g 7g 5g							
Overvoltage Category/Pollution Degree	III/3							
Coil Data **Voltage Tolerance**								
Pick-Up (x Uc) AC operated DC operated	 0.8 – 1.1 0.8 – 1.1	 0.8 – 1.1 0.7 – 1.2						
Drop-Out (x Uc) AC operated DC operated	 0.4 – 0.6 0.2 – 0.6	 0.4 – 0.6 0.2 – 0.6						
Power Consumption of the Coil at Cold State and 1.0 x Uc								
AC operated 50/50Hz Pick-up VA Pick-up W Sealing VA Sealing W	 24 19 4 1.2	 50 40 8 2.4		 150 95 16 4		 180 150 3.1 2.1		
DC operated Pick-up W Sealing W	 4.5 4.5	 12 0.5		 24 0.5		 149 2.1		
Duty Factor (%DF)	100							
Switching Time at 100% Uc (Approximate Values)								
Main Contact AC operated Closing delay (mS) Opening delay (mS)	 15 to 21 9 to 18	 6 to 22 8 to 14		 12 to 18 8 to 13		 28 to 33 35 to 41		
DC operated Closing delay (mS) Opening delay (mS)	 31 12	 47 30		 54 24		 35 30		
Arcing Time (mS)	10	10		10		15		

Auxiliary Contacts

Table 34-117. Auxiliary Contacts Technical Data and Specifications

Description	XTCE007B…– XTCE032C	XTCEXFAC… XTCEXFATC…	XTCEXFCC… XTCEXSCC…	XTCEXFAG…	XTCEXSBLN… XTCEXSBN… XTCEXSBNC… XTCEXSCN… XTCEXSCNC…
Interlocked opposing contacts with an auxiliary contact module (to IEC 60947-5 -1 Annex L)	—	Yes	Yes	Yes	Yes
Break contact (not late-break contact) suitable as a mirror contact (to IEC/EN 60947-4 -1 Annex F)	XTCE007B… – XTCE032C	XTCE007B… – XTCE032C	XTCE007B… – XTCE032C	XTCE040D… – XTCE065D…	XTCE040D… – XTCE065D… XTCE185L… – XTCEC10N…
Rated impulse withstand voltage, (U_{imp}) V AC	6000	6000	6000	6000	6000
Overvoltage category / pollution degree	III/3	III/3	III/3	III/3	III/3
Rated insulation voltage, (U_i) V AC	690	690	690	690	690
Rated operational voltage, (U_e) V AC	500	500	500	500	500
Safe isolation to VDE 0106 Part 101 and Part 101(A) in V AC Between coil and auxiliary contacts Between the auxiliary contacts	 400 400	 400 400	 400 400	 440 440	 440 440
Rated Operational Current, I_e AC-15 230V 380/415V 500V DC-3 L/R ≤5 mS ① 24V 60V 110V 220V	 6A 4A 1.5A 10A 6A 3A 1A	 6A 3A — 10A 6A 3A 1A	 6A 4A 1.5A 10A 6A 3A 1A	 6A 4A 1.5A 10A 6A 3A 1A	 6A 4A 1.5A 10A 6A 3A 1A
Conventional thermal current, I_{th}	16A	16A	16A ③	10A	10A
Control circuit reliability (at U_e = 24 V DC, U_{min} = 17 V, I_{min} = 5.4 mA)	$<10^{-8}$, < one failure at 100 million operations				
Component Lifespan, Operations x 10^6 at U_e = 230V, AC-15, 3A	1.3	1.3	1.3	1.3	1.3
Short-circuit rating without welding ② Maximum fuse, gG/gL	 10A	 10A	 10A	 16A	 16A

① Making and breaking conditions to DC-13, time L/R contact as stated.
② See fuses overlay for time/current characteristic (on request).
③ Conventional thermal current (I_{th}) of XTCEXSCC_ is 10A.

Table 34-118. Parallel Link Technical Data and Specifications

Description	XTCEXPLKB	XTECXPLKC	XTCEXPLKD	XTCEXPLKG	XTCEXPLK185
Terminal Capacity Solid (mm^2)	 1 – 16	 16	 16	 —	 —
Flexible with ferrule (mm^2)	1 x (0.5 – 25) 2 x (0.5 – 16)	1 x (16 – 35)	1 x (16 – 120)	—	—
Stranded (mm^2)	1 x (0.5 – 25) 2 x (0.5 – 16)	1 x (16 – 50)	1 x (16 – 120)	1 x (35 – 300) 2 x (35 – 120)	—
Flat conductor — number of segments x width x thickness (mm)	6 x 9 x 0.8	—	—	2 x (11 x 21 x 1)	1 x (6 x 16 x 0.8) 2 x (20 x 32 x 0.5) 2 x (11 x 21 x 1)
Tightening Torque (Nm)	4	4	14	—	—
Tools Pozidriv screwdriver Hexagon socket head spanner — SW (mm)	 Size 2 —	 Size 2 —	 — 5	 — 6	 — —
Conventional Thermal Current 3-Pole (I_{th}) A 4-Pole (I_{th}) A	 50 60	 100 —	 180 —	 400 —	 — —

Table 34-119. Cable Terminal Block, Flat Cable Terminal Technical Data and Specifications

Description	XTCEXTLA400	XTCEXPLK185	XTCEXTFB650	XTCEXTFB820
Terminal Capacity Stranded (mm^2)	 1 x (120 – 300) 2 x (70 – 240)	 —	 —	 —
Stranded (AWG)	1 x (1/0 – 600 MCM) 2 x (1/0 – 500 MCM)	—	—	—
Flat conductor — number of segments x width x thickness (mm)	1 x (10 x 16 x 0.8) 2 x (20 x 24 x 0.5) 2 x (11 x 21 x 1)	1 x (6 x 16 x 0.8) 2 x (20 x 32 x 0.5) 2 x (11 x 21 x 1)	1 x (6 x 16 x 0.8) 2 x (20 x 32 x 0.5) 2 x (11 x 21 x 1)	1 x (6 x 16 x 0.8) 2 x (10 x 40 x 1) 2 x (20 x 40 x 0.5)

AC Ratings

Table 34-120. AC Ratings

Description	XTCE007B	XTCE009B	XTCE012B	XTCE015B	XTCE018C	XTCE025C	XTCE032C
AC-1 Operation							
Conventional Free Air Thermal Current, 3-Pole, 50 – 60 Hz							
Open							
at 40°C (I_{th})	22A	22A	22A	22A	40A	45A	45A
at 50°C (I_{th})	21A	21A	21A	21A	38A	43A	43A
at 55°C (I_{th})	21A	21A	21A	21A	37A	42A	42A
at 60°C (I_{th})	20A	20A	20A	20A	35A	40A	40A
Enclosed	18A	18A	18A	18A	32A	36A	36A
Conventional Free Air Thermal Current, 1-Pole (I_{th})							
Open	50A	50A	50A	50A	88A	100A	100A
Enclosed	45A	45A	45A	45A	80A	90A	90A
AC-3 Operation							
Rated Operational Current, 50/60 Hz ① (I_e) in amperes							
220/230V	7	9	12	15.5	18	25	32
240V	7	9	12	15.5	18	25	32
380/400V	7	9	12	15.5	18	25	32
415V	7	9	12	15.5	18	25	32
440V	7	9	12	15.5	18	25	32
500V	5	7	10	12.5	18	25	32
660/690V	4	5	7	9	12	15	18
1000V	—	—	—	—	—	—	—
Rated power (P) in kilowatts							
220/230V	2.2	2.5	3.5	4	5	7.5	10
240V	2.2	3	4	4.6	5.5	8.5	11
380/400V	3	4	5.5	7.5	7.5	11	15
415V	4	5.5	7	8	10	14.5	19
440V	4.5	5.5	7.5	8.4	10.5	15.5	20
500V	3.5	4.5	7	7.5	12	17.5	23
660/690V	3.5	4.5	6.5	7	11	14	17
1000V	—	—	—	—	—	—	—
AC-4 Operation							
Rated Operational Current, 50/60 Hz ① (I_e) in amperes							
220/230V	5	6	7		10	13	15
240V	5	6	7	7	10	13	15
380/400V	5	6	7	7	10	13	15
415V	5	6	7	7	10	13	15
440V	5	6	7	7	10	13	15
500V	4.5	5	6	6	10	13	15
660/690V	4	4.5	5	5	8	10	12
1000V	—	—	—	—	—	—	—
Rated power (P) in kilowatts							
220/230V	1	1.5	2	2	2.5	3.5	4
240V	1.5	1.6	2.2	2.2	3	4	4.5
380/400V	2.2	2.5	3	3	4.5	6	7
415V	2.3	2.8	3.4	3.4	5	6.5	7.5
440V	2.4	3	3.6	3.6	5.5	7	8
500V	2.5	2.8	3.5	3.5	6	8	9
660/690V	2.9	3.6	4.4	4.4	6.5	8.5	10
1000V	—	—	—	—	—	—	—
AC-6A Operation							
Transformer Loads	Values are application specific. Calculation is I_{eAC-3} = X / 6 * Ie Transformer where X is the inrush current of the transformer and Ie Transformer is the nominal current. ②						
AC-6B Operation							
Capacitor Loads Individual compensation rated operational current I_e of three-phase capacitors in amperes Up to 525V 690V	See **Page 34-48** for Capacitor Ratings						
Maximum inrush current peak (x I_e)	30	30	30	30	30	30	30
Component Lifesaving (Operations)	—	—	—	—	—	—	—
Maximum Operating Frequency (ops/hr)	—	—	—	—	—	—	—

① At maximum permissible ambient temperature.

② Example —
The transformer has a nominal current of 10A with an inrush current of 18 times the nominal current. So, the contactor must have an AC-3 current of 18/6 x 10A = 30A. Using an XTCE032C (32A AC-3) contactor is recommended.

Table 34-120. AC Ratings (Continued)

Description	XTCE040D	XTCE050D	XTCE065D	XTCE072D	XTCE080F	XTCE095F	XTCE115G	XTCE150G	XTCE170G
AC-1 Operation									
Conventional Free Air Thermal Current, 3-Pole, 50 – 60 Hz									
Open									
at 40°C (I_{th})	60A	80A	98A	98A	110A	130A	160A	190A	275A ①
at 50°C (I_{th})	57A	71A	88A	88A	98A	125A	142A	180A	200A
at 55°C (I_{th})	55A	68A	83A	83A	94A	115A	135A	170A	190A
at 60°C (I_{th})	50A	65A	80A	80A	90A	110A	130A	160A	185A
Enclosed	45A	58A	72A	72A	80A	100A	115A	144A	166A
Conventional Free Air Thermal Current, 1-Pole (I_{th})									
Open	125A	162A	200A	200A	225A	275A	325A	400A	460A
Enclosed	112A	145A	180A	180A	200A	250A	285A	360A	415A
AC-3 Operation									
Rated Operational Current, 50/60 Hz ② (I_e)									
in amperes	40	50	65	72	80	95	115	150	170
220/230V	40	50	65	72	80	95	115	150	170
240V	40	50	65	72	80	95	115	150	170
380/400V	40	50	65	72	80	95	115	150	170
415V	40	50	65	72	80	95	115	150	170
440V	40	50	65	72	80	95	115	150	170
500V	25	32	37	37	65	80	93	100	150
660/690V	—	—	—	—	—	—	—	—	—
1000V									
Rated power (P) in kilowatts									
220/230V	12.5	15.5	20	22	25	30	37	48	52
240V	13.5	17	22	35	27.5	34	40	52	57
380/400V	18.5	22	30	37	37	45	55	75	90
415V	24	30	39	41	43	57	70	91	100
440V	25	32	41	44	51	60	75	95	105
500V	28	36	47	45	58	70	85	110	120
660/690V	23	30	35	35	63	75	90	96	140
1000V	—	—	—	—	—	—	—	—	—
AC-4 Operation									
Rated Operational Current, 50/60 Hz ② (I_e)									
in amperes	18	21	25	25	40	50	55	65	65
220/230V	18	21	25	25	40	50	55	65	65
240V	18	21	25	25	40	50	55	65	65
380/400V	18	21	25	25	40	50	55	65	65
415V	18	21	25	25	40	50	55	65	65
440V	18	21	25	25	40	50	55	65	65
500V	14	17	20	20	40	50	45	50	50
660/690V	—	—	—	—	—	—	—	—	—
1000V									
Rated power (P) in kilowatts									
220/230V	5	6	7	7	12	16	17	20	20
240V	5.5	6.5	7.5	7.5	13	17	19	22	22
380/400V	9	10	12	12	20	26	28	33	33
415V	9.5	11	13	13	24	30	33	39	39
440V	10	12	14	14	25	32	35	41	41
500V	11	13	16	16	29	36	40	47	47
660/690V	12	14	17	17	26	35	43	48	48
1000V	—	—	—	—	—	—	—	—	—
AC-6A Operation									
Transformer Loads	Values are application specific. Calculation is I_{eAC-3} = X / 6 * Ie Transformer where X is the inrush current of the transformer and Ie Transformer is the nominal current. ③								
AC-6B Operation									
Capacitor Loads Individual compensation rated operational current I_e of three-phase capacitors in amperes	See **Page 34-48** for Capacitor Ratings								
Up to 525V									
690V									
Maximum inrush current peak (x I_e)	30	30	30	30	30	30	30	30	30
Component Lifesaving (Operations)	—	—	—	—	—	—	—	—	—
Maximum Operating Frequency (ops/hr)	—	—	—	—	—	—	—	—	—

① For 225 – 275A, use 2X 70 mm^2 wire.
② At maximum permissible ambient temperature.
③ Example — The transformer has a nominal current of 10A with an inrush current of 18 times the nominal current. So, the contactor must have an AC-3 current of 18/6 x 10A = 30A. Using an XTCE032C (32A AC-3) contactor is recommended.

Table 34-120. AC Ratings (Continued)

Description	XTCE185L	XTCE225L	XTCE250L	XTCE300M	XTCE400M	XTCE500M	XTCE570M	XTCE580N
AC-1 Operation								
Conventional Free Air Thermal Current, 3-Pole, 50 – 60 Hz								
at 40°C (I_{th})	337	386	429	490	612	857	857	980
at 50°C (I_{th})	301	345	383	438	548	767	767	876
at 55°C (I_{th})	287	329	366	418	522	731	731	836
at 60°C (I_{th})	275	315	350	400	500	700	700	800
Conventional Free Air Thermal Current, 1-Pole (I_{th})	685	785	875	1000	1250	1750	1750	2000
AC-3 Operation								
Rated Operational Current, 50/60 Hz ① (I_e) in amperes								
220/230V	185	225	250	300	400	500	580	580
240V	185	225	250	300	400	500	580	580
380/400V	185	225	250	300	400	500	580	580
415V	185	225	250	300	400	500	580	580
440V	185	225	250	300	400	500	580	580
500V	185	225	250	300	400	500	580	580
660/690V	185	225	250	300	400	500	580	580
1000V	76	76	76	95	95	95	95	435
Rated power (P) in kilowatts								
220/230V	55	70	75	90	125	155	185	185
240V	62	75	85	100	132	170	200	200
380/400V	90	110	132	160	200	250	315	315
415V	110	132	148	180	240	300	348	348
440V	115	142	157	190	255	345	370	370
500V	132	160	180	215	290	360	420	420
660/690V	175	215	240	286	344	344	344	560
1000V	108	108	108	132	132	132	132	600
AC-4 Operation								
Rated Operational Current, 50/60 Hz ① (I_e) in amperes								
220/230V	136	164	200	240	296	360	360	456
240V	136	164	200	240	296	360	360	456
380/400V	136	164	200	240	296	360	360	456
415V	136	164	200	240	296	360	360	456
440V	136	164	200	240	296	360	360	456
500V	136	164	200	240	296	360	360	456
660/690V	136	164	200	240	296	296	296	456
1000V	76	76	76	95	95	95	95	348
Rated power (P) in kilowatts								
220/230V	41	51	62	75	92	112	112	143
240V	45	54	68	82	101	122	122	156
380/400V	75	90	110	132	160	200	200	250
415V	80	96	117	142	176	216	216	274
440V	85	102	125	151	186	229	229	290
500V	96	116	143	172	214	260	260	330
660/690V	127	155	189	229	283	344	344	440
1000V	108	108	108	132	132	132	132	509
AC-6A Operation								
Transformer Loads	Values are application specific. Calculation is I_{eAC-3} = X / 6 * Ie Transformer where X is the inrush current of the transformer and Ie Transformer is the nominal current. ②							
AC-6B Operation								
Capacitor Loads Individual compensation rated operational current I_e of three-phase capacitors in amperes								
Up to 525V	220	220	220	307	307	307	307	463
690V	133	133	133	177	177	177	177	265
Maximum inrush current peak (x I_e)	30	30	30	30	30	30	30	30
Component Lifesaving (Operations)	100,000	100,000	100,000	100,000	100,000	100,000	100,000	100,000
Maximum Operating Frequency (ops/hr)	200	200	200	200	200	200	200	200

① At maximum permissible ambient temperature.

② Example —
The transformer has a nominal current of 10A with an inrush current of 18 times the nominal current. So, the contactor must have an AC-3 current of 18/6 x 10A = 30A. Using an XTCE032C (32A AC-3) contactor is recommended.

Table 34-120. AC Ratings (Continued)

Description	XTCE650N	XTCE750N	XTCE820N	XTCEC10N	XTCEC14P	XTCEC16R	XTCEC20R
AC-1 Operation							
Conventional Free Air Thermal Current, 3-Pole, 50 – 60 Hz							
at 40°C (I_{th})	1041	1102	1225	1225	1714 ①	2200	2450 ①
at 50°C (I_{th})	931	986	1095	1095	1533 ①	1970	2190 ①
at 55°C (I_{th})	888	940	1044	1044	1462 ①	1800	2089 ①
at 60°C (I_{th})	850	900	1000	1000	1400 ①	1800	2000 ①
Conventional Free Air Thermal Current, 1-Pole (I_{th})	2125	2250	2500	2500	3500	4500	5000
AC-3 Operation							
Rated Operational Current, 50/60 Hz ② (I_e) in amperes							
220/230V	650	750	820	1000	—	1600	—
240V	650	750	820	1000	—	1600	—
380/400V	650	750	820	1000	—	1600	—
415V	650	750	820	1000	—	1600	—
440V	650	750	820	1000	—	1600	—
500V	650	750	820	1000	—	1600	—
660/690V	650	750	820	1000	—	1600	—
1000V	435	580	580	700	—	—	—
Rated power (P) in kilowatts							
220/230V	205	240	260	315	—	500	—
240V	225	260	285	340	—	550	—
380/400V	355	400	450	560	—	900	—
415V	390	455	500	610	—	930	—
440V	420	480	525	650	—	1000	—
500V	470	550	600	730	—	1180	—
660/690V	630	720	750	1000	—	1600	—
1000V	600	800	800	1000	—	—	—
AC-4 Operation							
Rated Operational Current, 50/60 Hz ② (I_e) in amperes							
220/230V	512	576	656	800	—	1280	—
240V	512	576	656	800	—	1280	—
380/400V	512	576	656	800	—	1280	—
415V	512	576	656	800	—	1280	—
440V	512	576	656	800	—	1280	—
500V	512	576	656	800	—	1280	—
660/690V	512	576	656	800	—	1280	—
1000V	348	464	464	700	—	—	—
Rated power (P) in kilowatts							
220/230V	161	181	209	260	—	430	—
240V	176	200	228	280	—	450	—
380/400V	280	315	355	450	—	750	—
415V	307	346	394	490	—	770	—
440V	326	367	418	520	—	830	—
500V	370	417	474	590	—	940	—
660/690V	494	556	633	780	—	1300	—
1000V	509	678	678	1000	—	—	—
AC-6A Operation							
Transformer Loads	Values are application specific. Calculation is $I_{eAC-3} = X / 6 * I_e$ Transformer where X is the inrush current of the transformer and Ie Transformer is the nominal current. ③						
AC-6B Operation							
Capacitor Loads Individual compensation rated operational current I_e of three-phase capacitors in amperes							
Up to 525V	463	463	463	463	—	—	—
690V	265	265	265	265	—	—	—
Maximum inrush current peak (x I_e)	30	30	30	30	—	—	—
Component Lifesaving (Operations)	100,000	100,000	100,000	100,000	—	—	—
Maximum Operating Frequency (ops/hr)	200	200	200	200	—	—	—

① Up to 690V.

② At maximum permissible ambient temperature.

③ Example —
The transformer has a nominal current of 10A with an inrush current of 18 times the nominal current. So, the contactor must have an AC-3 current of 18/6 x 10A = 30A. Using an XTCE032C (32A AC-3) contactor is recommended.

34

Table 34-121. AC Ratings — 4-Pole

Description	XTCF020B	XTCF032C	XTCF045C	XTCF063D	XTCF080D	XTCF125G	XTCF160G	XTCF200G
AC-1 Operation								
Conventional Free Air Thermal Current, 3-Pole, 50-60 Hz								
Open (Amps)								
at 40°C (I_{th})	22	32	45	3	80	125	160	200
at 50°C (I_{th})	21	30	41	60	76	116	150	188
at 60°C (I_{th})	20	28	39	54	69	108	138	172
Enclosed (Amps)	18	27	36	50	64	100	128	160
Conventional Free Air Thermal Current, 1-Pole								
Open (Amps)	60	84	117	162	207	325	415	516
Enclosed (Amps)	54	76	105	146	186	292	373	464
AC-3 Operation								
Rated Operational Current, 50/60 Hz (I_e) in amperes								
220/230V	12	18	25	40	50	80	95	115
240V	12	18	25	40	50	80	95	115
380/400V	12	18	25	40	50	80	95	115
415V	12	18	25	40	50	80	95	115
440V	12	18	25	40	50	80	95	115
500V	10	18	25	40	50	80	95	115
660/690V	7	12	15	25	32	65	80	93
Rated Power, (P) in kilowatts								
220/230V	3.5	5	7.5	2.5	15.5	25	30	37
240V	4	5.5	8.5	13.5	17	27.5	33	40
380/400V	5.5	7.5	11	18.5	22	37	45	55
415V	7	10	14.5	24	30	48	57	70
440V	7.5	10.5	15.5	25	32	51	60	75
500V	7	12	17.5	28	36	58	70	85
660/690V	6.5	11	14	23	30	63	75	90

DC Ratings

Table 34-122. DC Ratings — DC-1

Description	XTCE007B	XTCE009B	XTCE012B, XTCF020B	XTCE015B	XTCE018C	XTCE025C	XTCE032C
Rated operation current {1} (I_e) in amperes							
60V	20	20	20	20	35	40	40
110V	20	20	20	20	35	40	40
220V	15	15	15	15	35	40	40
440V	1	1.3	1.3	1.3	2.9	2.9	2.9
	XTCE040D	**XTCE050D**	**XTCE065D**	**XTCE080F**	**XTCE095F**	**XTCE115G**	**XTCE150G**
60V	50	60	72	110	110	160	160
110V	50	50	72	110	110	160	160
220V	45	45	65	70	70	90	90
440V	2.9	2.9	2.9	4.5	4.5	4.5	4.5
	XTCE185L	**XTCE225L**	**XTCE250L**	**XTCE300M**	**XTCE400M**	**XTCE500M**	**XTCE580N**
60V	300	300	300	400	400	400	—
110V	300	300	300	400	400	400	—
220V	300	300	300	400	400	400	—
440V	11	11	11	11	11	11	—
	XTCE650N	**XTCE750N**	**XTCE820N**	**XTCEC10N**	**XTCEC14P**	**XTCEC20R**	**XTCEC16R**
60V	—	—	—	—	—	—	—
110V	—	—	—	—	—	—	—
220V	—	—	—	—	—	—	—
440V	—	—	—	—	—	—	—

Table 34-123. DC Ratings — DC-3

Description	XTCE007B	XTCE009B	XTCE012B	XTCE015B	XTCE018C	XTCE025C	XTCE032C
Rated operation current {1} (I_e) in amperes							
60V	20	20	20	20	35	35	40
110V	20	20	20	20	35	35	40
220V	1.5	1.5	1.5	1.5	10	10	25
440V	0.2	0.2	0.2	0.2	0.6	0.6	0.6
	XTCE040D	**XTCE050D**	**XTCE065D**	**XTCE080F**	**XTCE095F**	**XTCE115G**	**XTCE150G**
60V	50	60	72	110	110	160	160
110V	50	50	72	110	110	160	160
220V	25	25	35	35	35	40	40
440V	0.6	0.6	0.6	1	1	1	1
	XTCE185L	**XTCE225L**	**XTCE250L**	**XTCE300M**	**XTCE400M**	**XTCE500M**	**XTCE580N**
60V	300	300	300	400	400	400	—
110V	300	300	300	400	400	400	—
220V	300	300	300	400	400	400	—
440V	—	—	—	—	—	—	—
	XTCE650N	**XTCE750N**	**XTCE820N**	**XTCEC10N**	**XTCEC14P**	**XTCEC20R**	**XTCEC16R**
60V	—	—	—	—	—	—	—
110V	—	—	—	—	—	—	—
220V	—	—	—	—	—	—	—
440V	—	—	—	—	—	—	—

34

Table 34-124. DC Ratings — DC-5

Description	XTCE007B	XTCE009B	XTCE012B	XTCE015B	XTCE018C	XTCE025C	XTCE032C
Rated operation current {1} (I_e) in amperes							
60V	20	20	20	20	35	35	40
110V	20	20	20	20	35	35	40
220V	1.5	1.5	1.5	1.5	10	10	25
440V	0.2	0.2	0.2	0.2	0.6	0.6	0.6
	XTCE040D	**XTCE050D**	**XTCE065D**	**XTCE080F**	**XTCE095F**	**XTCE115G**	**XTCE150G**
60V	50	60	72	110	110	160	160
110V	50	50	72	110	110	160	160
220V	25	25	35	35	35	40	40
440V	0.6	0.6	0.6	1	1	1	1
	XTCE185L	**XTCE225L**	**XTCE250L**	**XTCE300M**	**XTCE400M**	**XTCE500M**	**XTCE580N**
60V	300	300	300	400	400	400	—
110V	300	300	300	400	400	400	—
220V	300	300	300	400	400	400	—
440V	—	—	—	—	—	—	—
	XTCE650N	**XTCE750N**	**XTCE820N**	**XTCEC10N**	**XTCEC14P**	**XTCEC20R**	**—**
60V	—	—	—	—	—	—	—
110V	—	—	—	—	—	—	—
220V	—	—	—	—	—	—	—
440V	—	—	—	—	—	—	—

Table 34-125. DC Ratings — 4-Pole

Description	XTCF020B	XTCF032C	XTCF045C	XTCF063D	XTCF080D	XTCF125G	XTCF160G	XTCF200G
Rated operational current, open (I_e) in amperes								
DC-1 Operation								
60V	22	32	45	63	80	125	160	200
110V	22	32	45	63	80	125	160	200
220V	6	32	45	63	80	125	160	200
440V	1.3	3	3	5	5	100	125	150
DC-3 Operation								
60V	20	32	45	63	80	125	160	200
110V	20	32	45	63	80	125	160	200
220V	1.5	32	45	63	80	125	160	200
440V	0.2	6	6	8	8	75	95	115
DC-5 Operation								
60V	20	32	45	63	80	125	160	200
110V	20	25	32	50	80	125	160	200
220V	1.5	15	22	38	70	100	125	150
440V	0.2	4	4	8	8	60	75	90

Heat Loss

Table 34-126. Current Heat Loss (3-Pole) in Watts

Description	XTCE007B	XTCE009B	XTCE012B, XTCF020B	XTCE015B	XTCE018C	XTCE025C	XTCE032C
Current heat loss (3-Pole) in watts at I_{th} at I_e to AC-3/400V	 3 0.37	 3 0.6	 3 1.1	 3 1.8	 7.3 1.9	 9.6 3.8	 12.1 6.1
Impedance per pole, mΩ	2.5	2.5	2.5	2.5	2	2	2

	XTCE040D	XTCE050D	XTCE065D	XTCE072D	XTCE080F	XTCE095F	XTCE115G	XTCE150G	XTCE170G
Current heat loss (3-Pole) in watts at I_{th} at I_e to AC-3/400V	 11.3 7.2	 19 11.3	 28.8 19	 28.8 23	 12.2 9.6	 18.2 13.5	 20.3 15.9	 30.7 27.0	 41.1 34.7
Impedance per pole, mΩ	1.5	1.5	1.5	1.5	0.5	0.5	0.4	0.4	0.4

	XTCE185L	XTCE225L	XTCE250L	XTCE300M	XTCE400M	XTCE500M	XTCE580N
Current heat loss (3-Pole) in watts at I_{th} at I_e to AC-3/400V	 34 16	 45 23	 55 28	 37 21	 58 37	 113 58	 61 32
Impedance per pole, mΩ	—	—	—	—	—	—	—

	XTCE650N	XTCE750N	XTCE820N	XTCEC10N	XTCEC14P	XTCEC20R	XTCEC16R
Current heat loss (3-Pole) in watts at I_{th} at I_e to AC-3/400V	 69 41	 78 54	 96 65	 96 96	 188 —	 192 —	 155 123
Impedance per pole, mΩ	—	—	—	—	—	—	—

Table 34-127. Current Heat Loss (4-Pole) in Watts

Description	XTCF020B	XTCF032C	XTCF045C	XTCF063D	XTCF080D	XTCF125G	XTCF160G	XTCF200G
Current Heat Loss (3-Pole) at I_{th} in watts Impedence per pole, mΩ	 4.7 2.5	 8.2 2	 12 1.5	 16 1	 23 0.7	 29 0.6	 46 0.6	 60 0.5

34

Life Curves

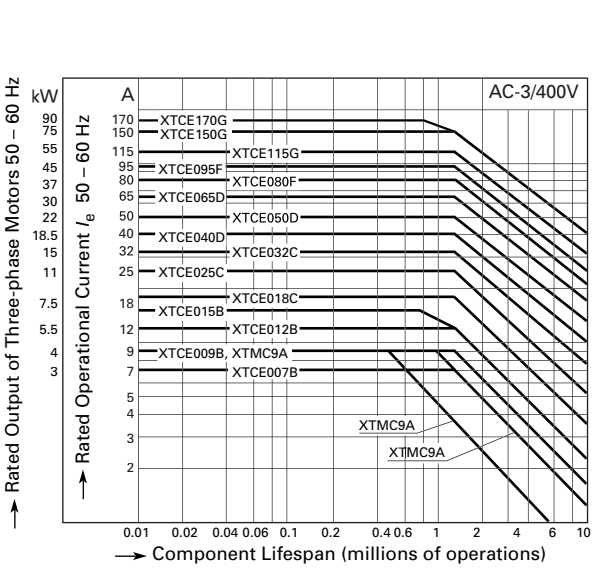

XTCE007B – XTCE170G

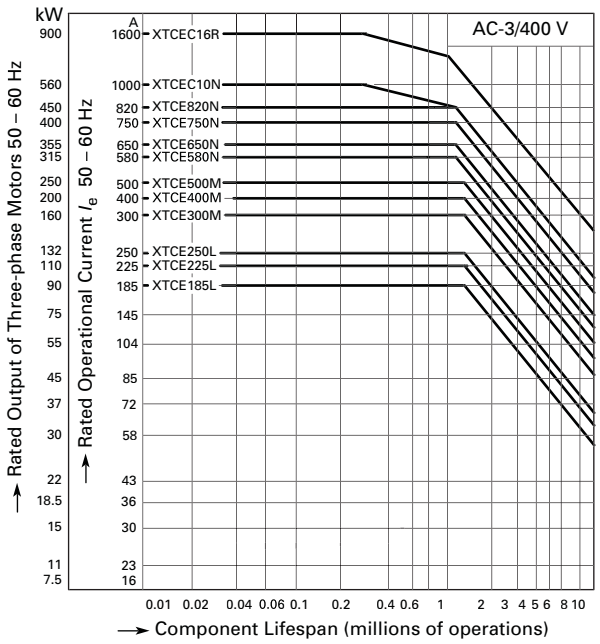

XTCE185L – XTCEC16R

Figure 34-39. Normal Switching Duty

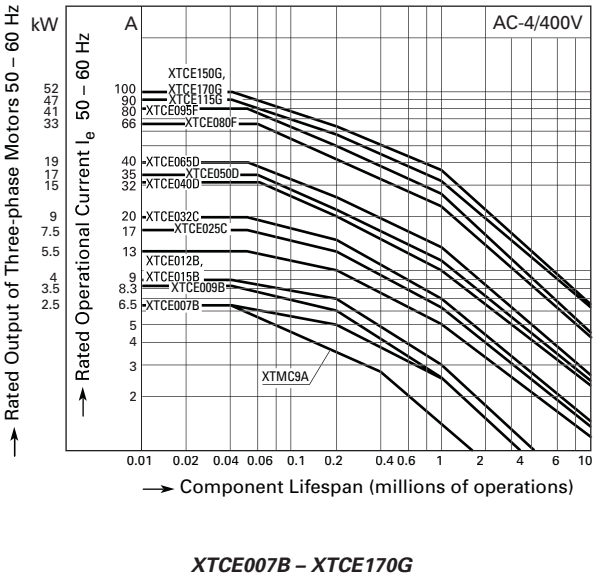

XTCE007B – XTCE170G

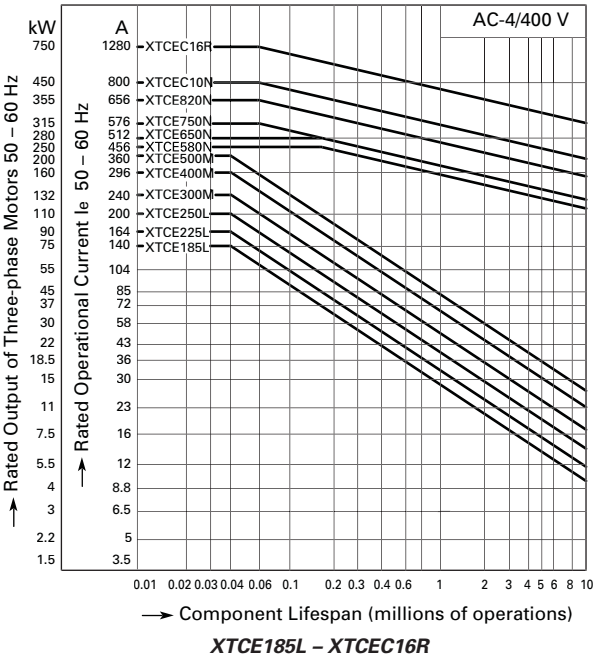

XTCE185L – XTCEC16R

Figure 34-40. Extreme Switching Duty

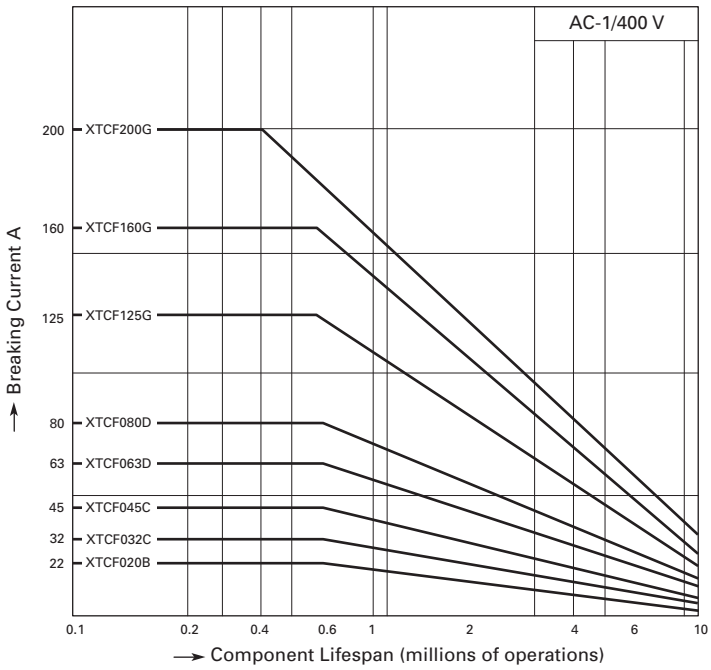

Operating characteristics:
Non-inductive and slightly inductive loads
Electrical characteristics:
Switch on: 1 x Rated current
Switch off: 1 x Rated current
Utilization category:
100% AC-1
Typical applications:
Electrical heating

Figure 34-41. Switching Duty for Non-motor Loads, 4-Pole — XTCF020B – XTCF200G

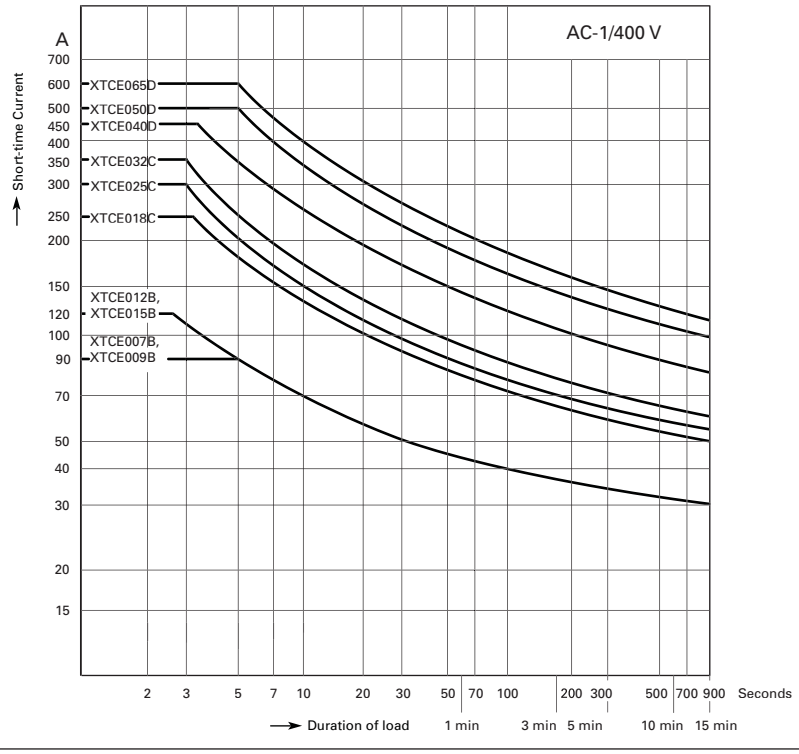

Figure 34-42. Short-time Loading, 3-Pole — XTCE007B – XTCE065D

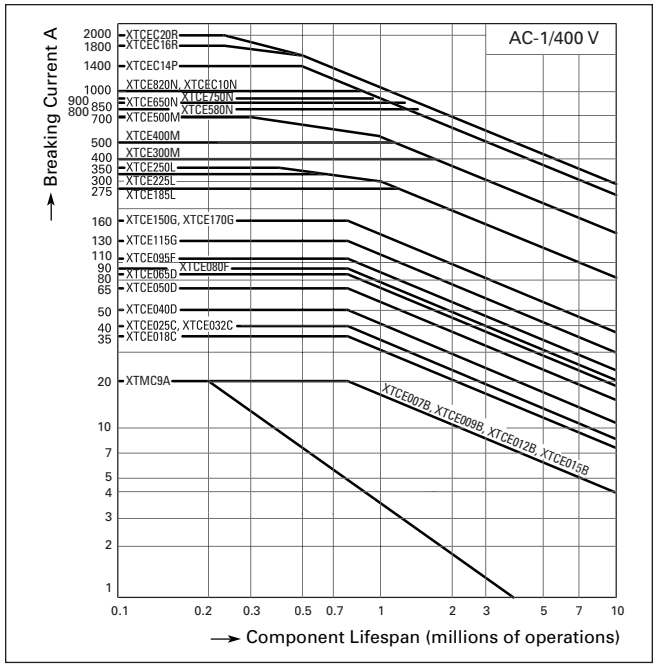

Figure 34-43. Switching Duty for Non-motor Loads, 3-Pole — XTCE007B – XTCEC20R

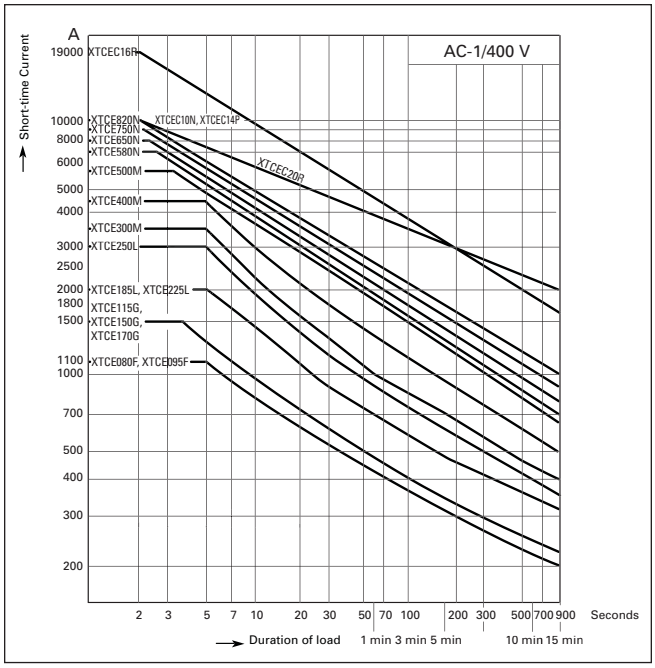

Figure 34-44. Short-Time Loading, 3-Pole — XTCE080F – XTCEC16R

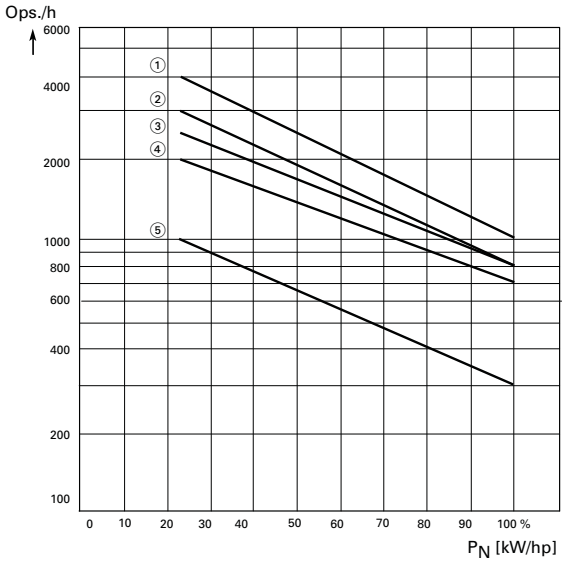

Utilization Category ①

Type	Characteristic Curve Above		
	AC-1	AC-3	AC-2 AC-4
XTCE007B – XTCE015B	3	1	5
XTCE018C – XTCE032C	3	2	5
XTCE040D – XTCE065D	3	2	5
XTCE080F – XTCE150G	3	4	5

① P_N = max. motor rating (kW/hp) of the relevant contactor.
ops./h = max. number of operations per hour.

7 to 150 hp

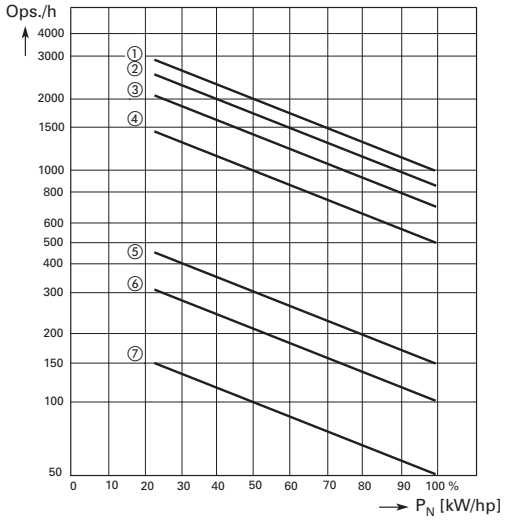

Utilization Category ④

Type	Characteristic Curve Above		
	AC-1	AC-3	AC-4
XTCE185L	2	1	6
XTCE225L	2	1	6
XTCE250L	2	1	6
XTCE300M	3	2	7
XTCE400M	3	2	7
XTCE500M	3	2	7
XTCE580N	3	4	5
XTCE650N	3	4	5
XTCE750N	3	4	5
XTCE820N	3	4	5

④ P_N = max. motor rating (kW/hp) of the relevant contactor.
ops./h = max. number of operations per hour.

185 to 820 hp

Figure 34-45. Maximum Operating Frequency — Related to Rating and Utilization Category (400V)

Dimensions

XTCE Contactors (3-Pole)

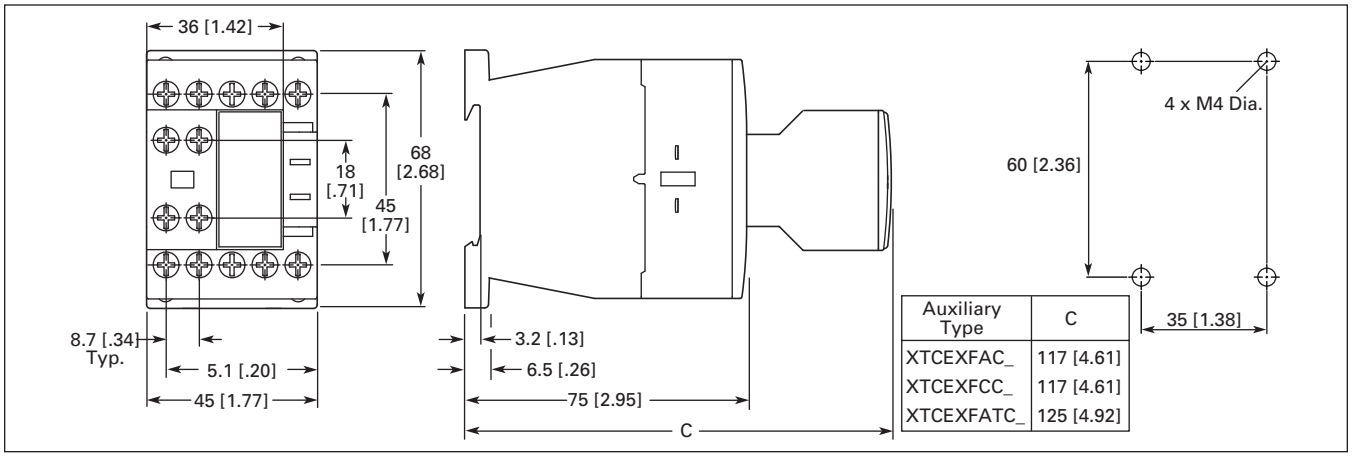

Auxiliary Type	C
XTCEXFAC_	117 [4.61]
XTCEXFCC_	117 [4.61]
XTCEXFATC_	125 [4.92]

Figure 34-46. Frame B, XTCE007B and XTCE015B Contactors with Screw Terminals (7 – 15A) XTCF020B — Approximate Dimensions in mm [in]

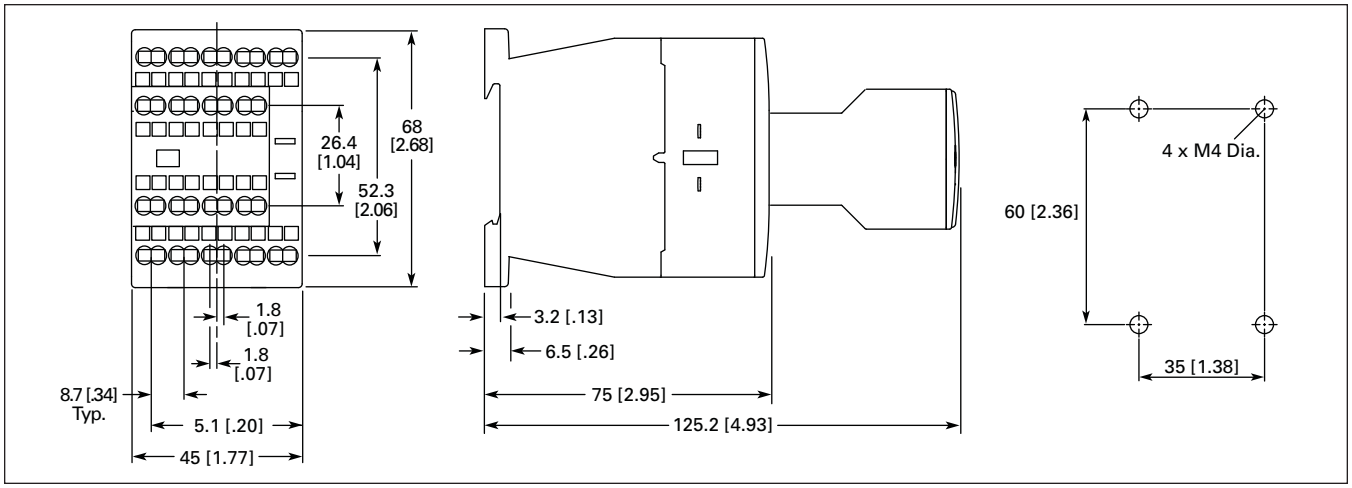

Figure 34-47. Frame B, XTCEC007B – XTCEC012B Contactors with Spring Cage Terminals (7 – 12A) — Approximate Dimensions in mm [in]

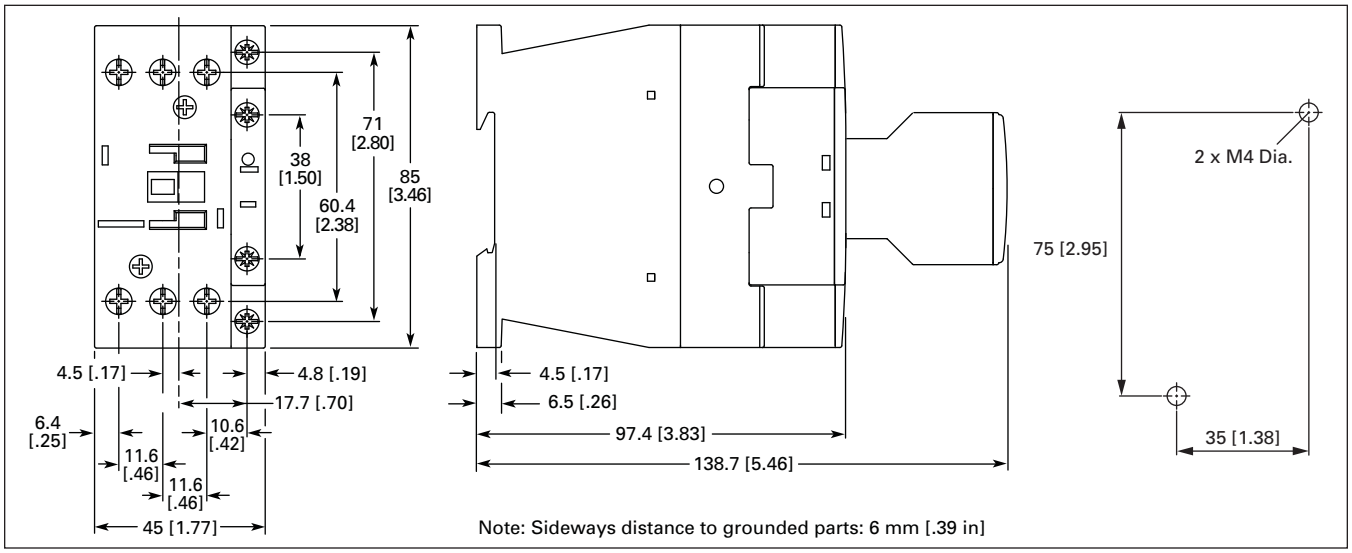

Figure 34-48. Frame C, XTCE018C – XTCE032C Contactors (18 – 32A) — Approximate Dimensions in mm [in]

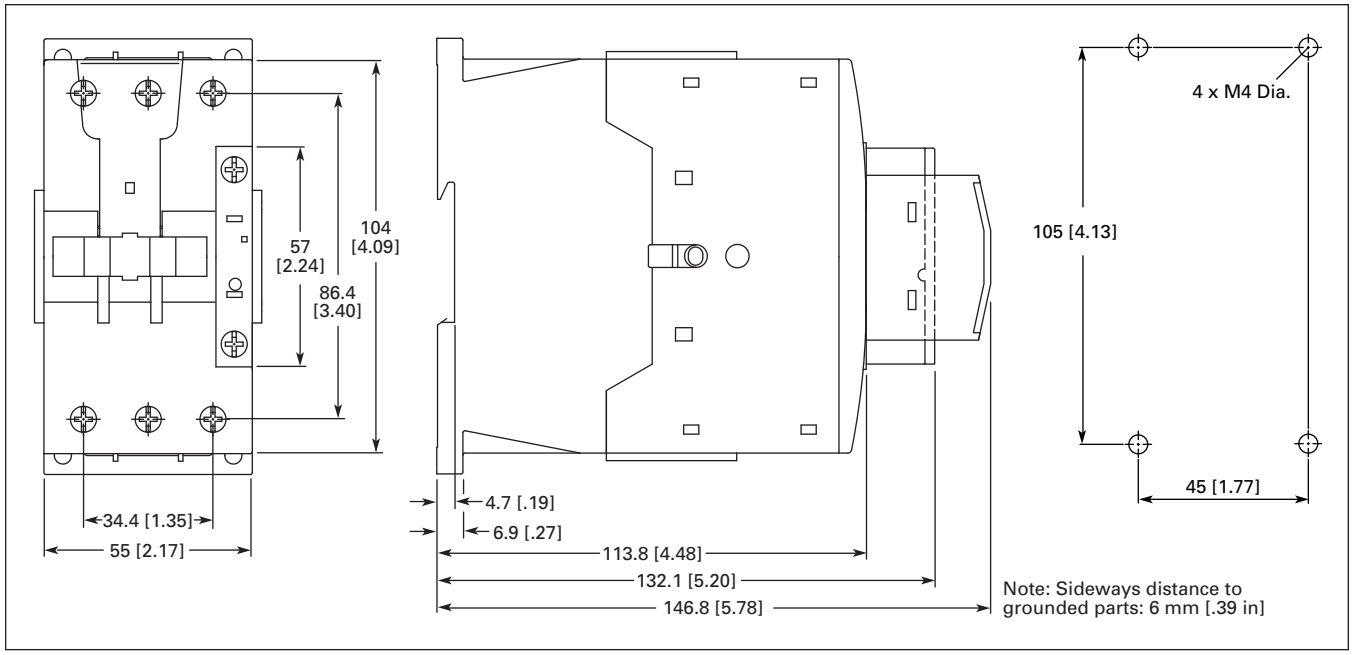

Figure 34-49. Frame D, XTCE040D – XTCE072D Contactors (40 – 75A) — Approximate Dimensions in mm [in]

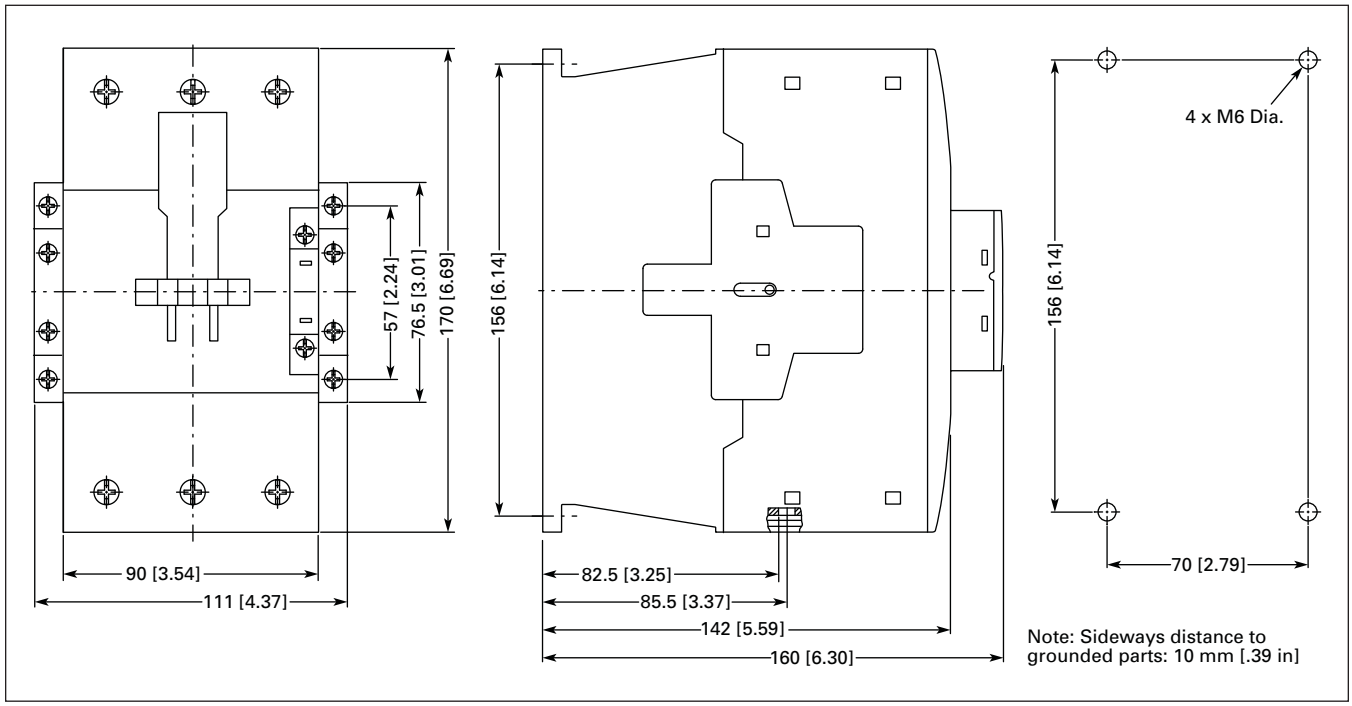

Figure 34-50. Frame F – G, XTCE080F – XTCE170G Contactors (80 – 170A) — Approximate Dimensions in mm [in]

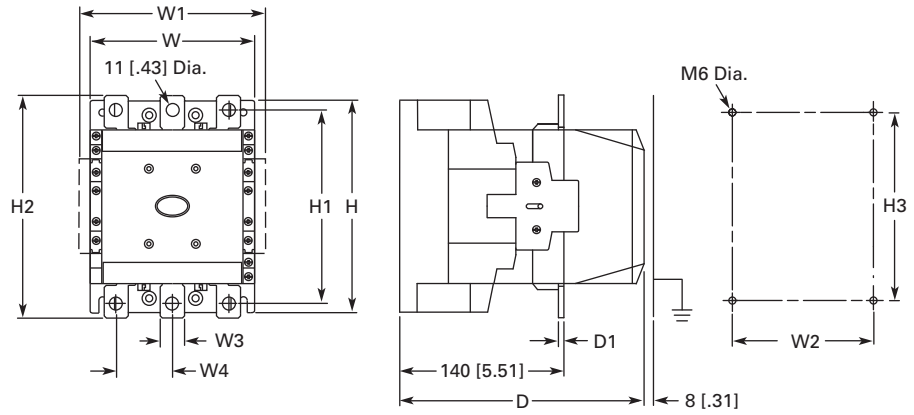

	W	W1	W2	W3	W4	H	H1	H2	H3	D	D1
Frame L (185 – 250A)	140 [5.51]	160 [6.30]	120 [4.72]	20 [.79]	48 [1.89]	180 [7.09]	164 [6.46]	189 [7.44]	160 [6.30]	208 [8.19]	5 [.20]
Frame M (300A – 400A)	160 [6.30]	180 [7.09]	130 [5.12]	25 [.98]	48 [1.89]	200 [7.87]	184 [7.24]	209 [8.23]	180 [7.09]	216 [8.50]	6 [.24]
Frame M (500A – 580A)	160 [6.30]	180 [7.09]	130 [5.12]	38 [1.50]	57 [2.24]	200 [7.87]	189 [7.44]	219 [8.62]	180 [7.09]	216 [8.50]	6 [.24]

Figure 34-51. Frame L – M, XTCE185L – XTCE570M Contactors (185 – 580A) — Approximate Dimensions in mm [in]

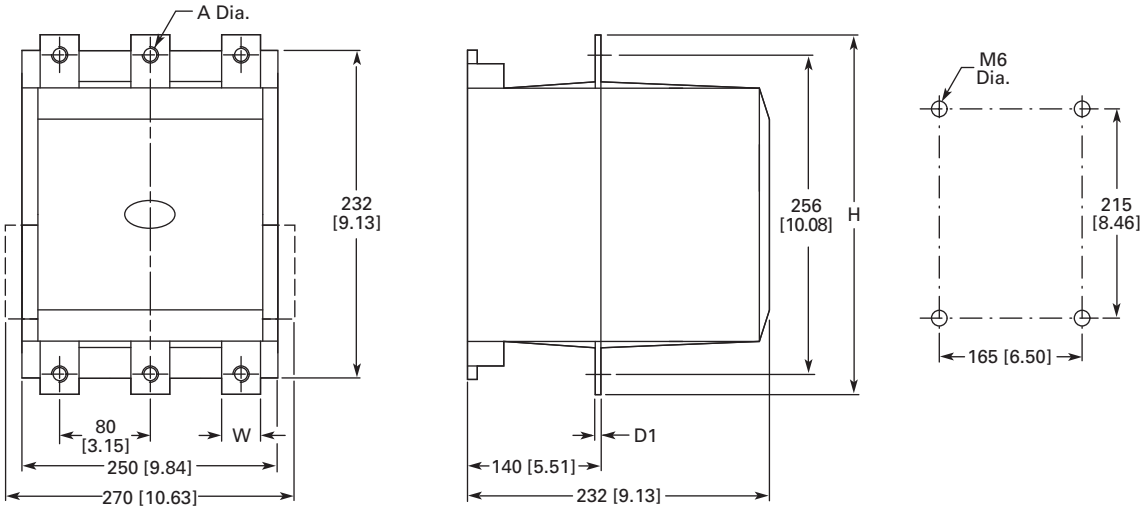

	W	H	D1	A (Dia.)
XTCE580N	45 [1.77]	296 [11.65]	6 [.24]	13.5 [.53]
XTCE650N	45 [1.77]	296 [11.65]	6 [.24]	13.5 [.53]
XTCE750N	45 [1.77]	296 [11.65]	6 [.24]	13.5 [.53]
XTCE820N	45 [1.77]	296 [11.65]	6 [.24]	13.5 [.53]
XTCEC10N	45 [1.77]	296 [11.65]	10 [.40]	13.5 [.53]

Figure 34-52. Frame N, XTCE580N – XTCEC10N Contactors (580 – 1000A) — Approximate Dimensions in mm [in]

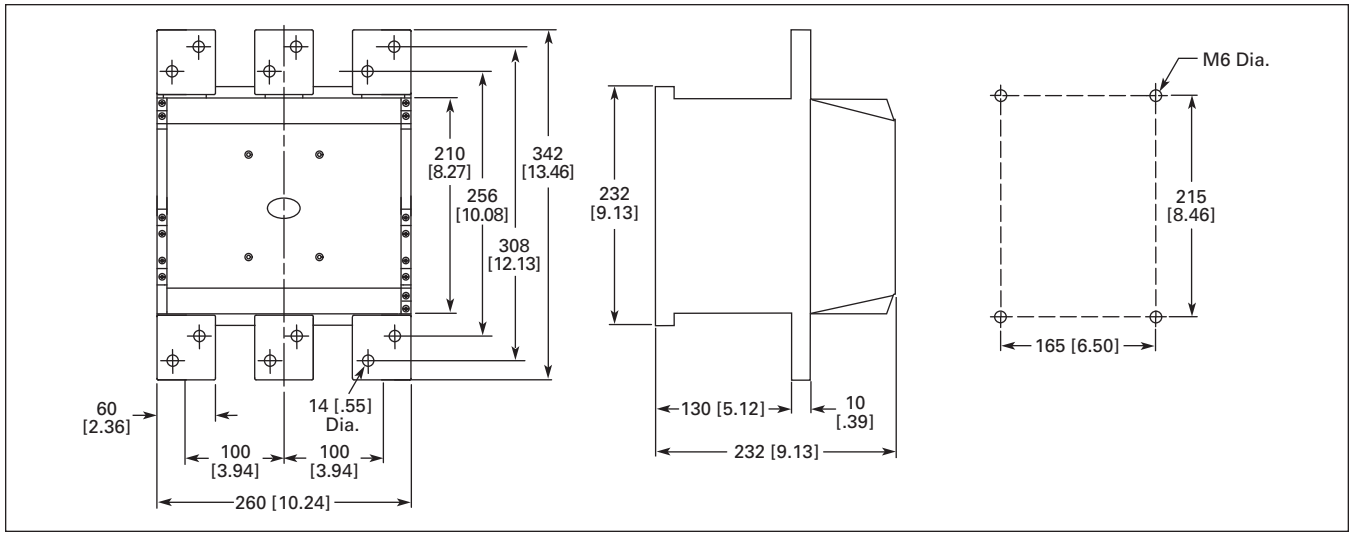

Figure 34-53. Frame P, XTCEC14P Contactor (1400A, AC-1) — Approximate Dimensions in mm [in]

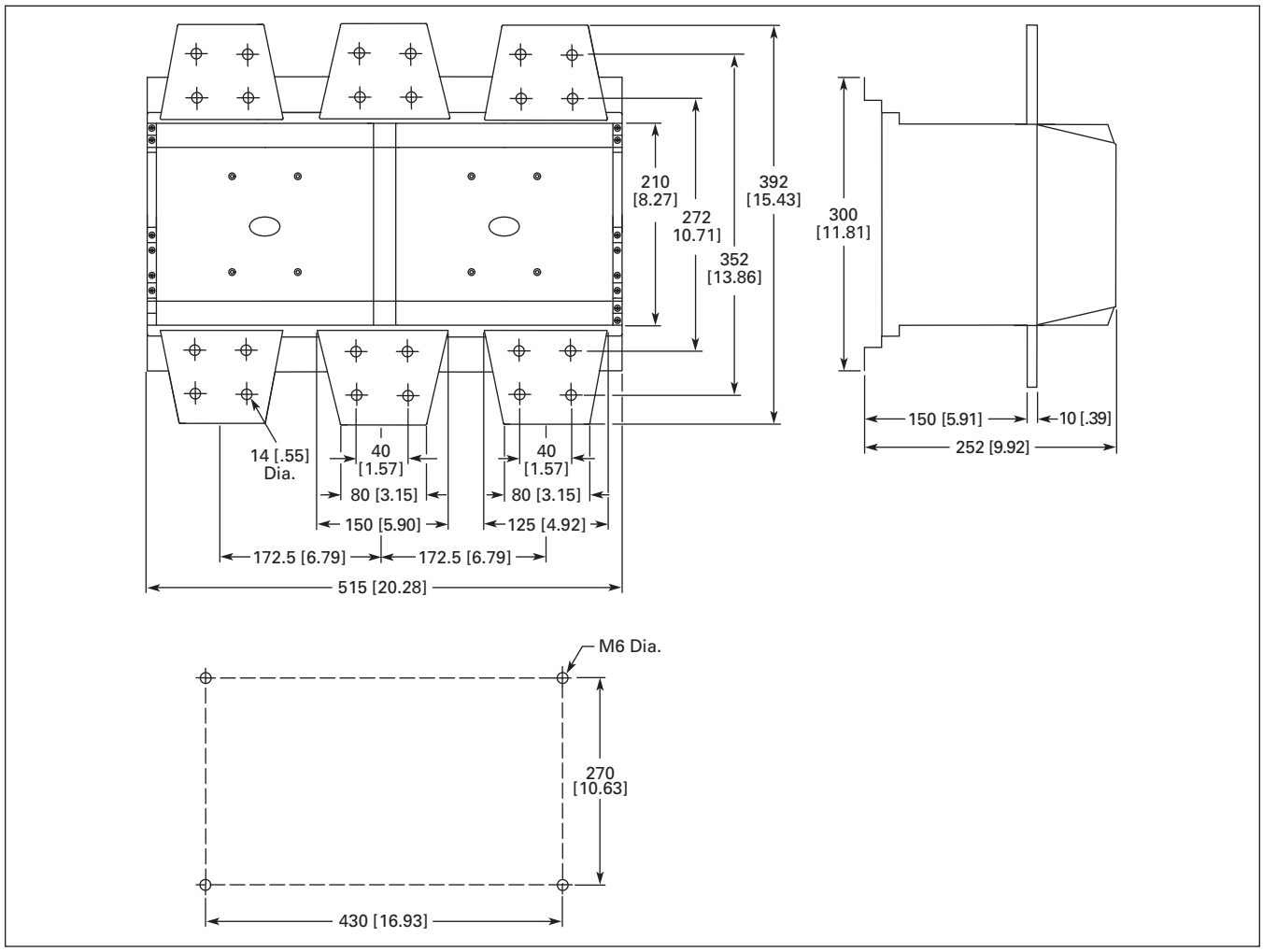

Figure 34-54. Frame R, XTCEC16R, XTCEC20R Contactors — Approximate Dimensions in mm [in]

XTCF Contactors (4-Pole)

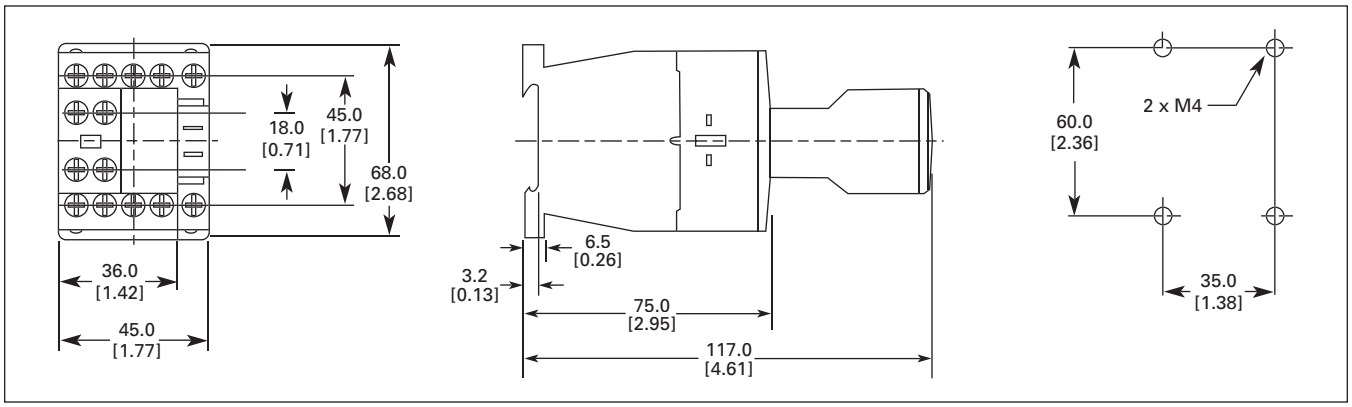

Figure 34-55. Frame B, XTCF020B Contactors — Approximate Dimensions in mm [in]

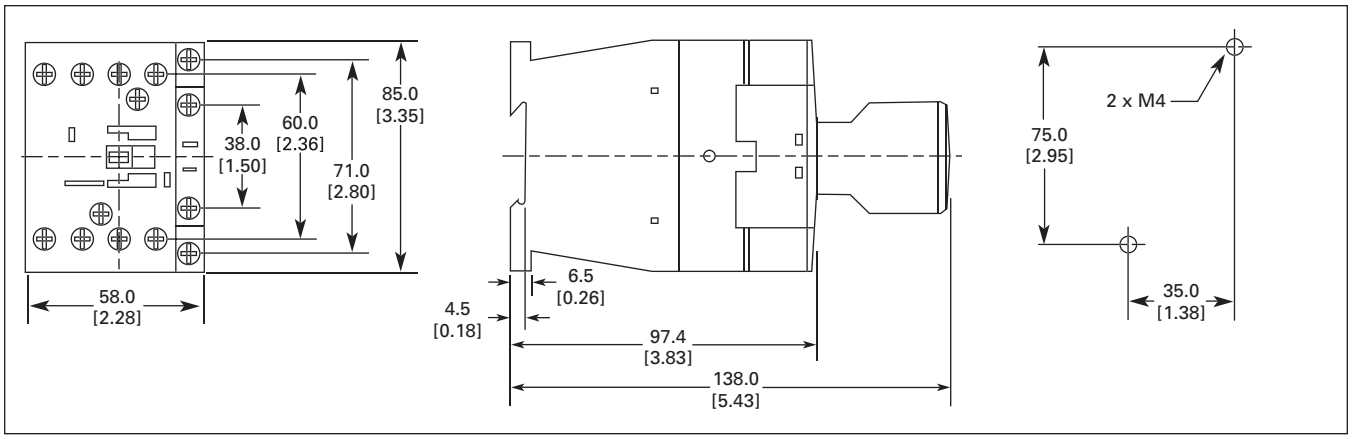

Figure 34-56. Frame C, XTCF032C – XTCF045C Contactors — Approximate Dimensions in mm [in]

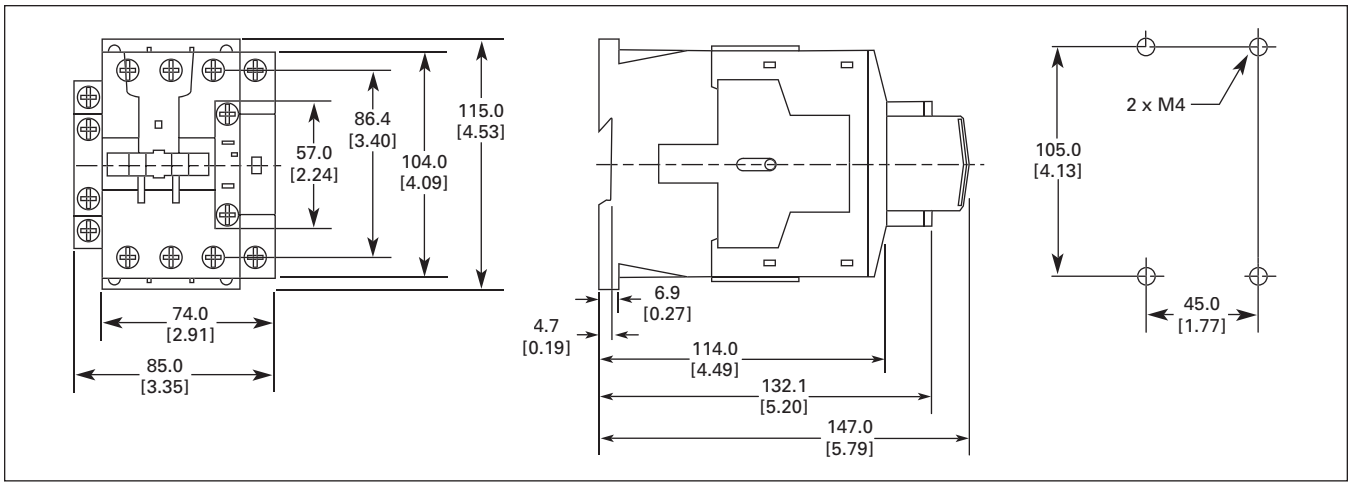

Figure 34-57. Frame D, XTCF063D – XTCF080D Contactors — Approximate Dimensions in mm [in]

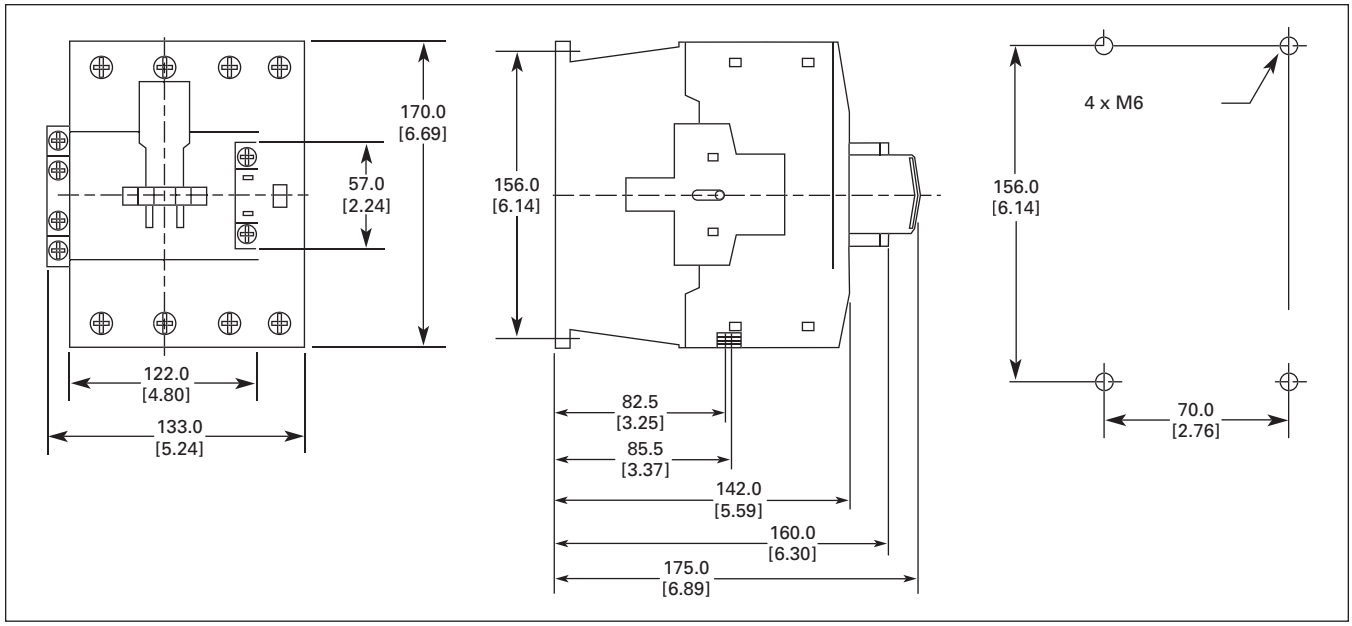

Figure 34-58. Frame G, XTCF125G – XTCF200G Contactors — Approximate Dimensions in mm [in]

XTAE Starters with XTOB Overload Relay

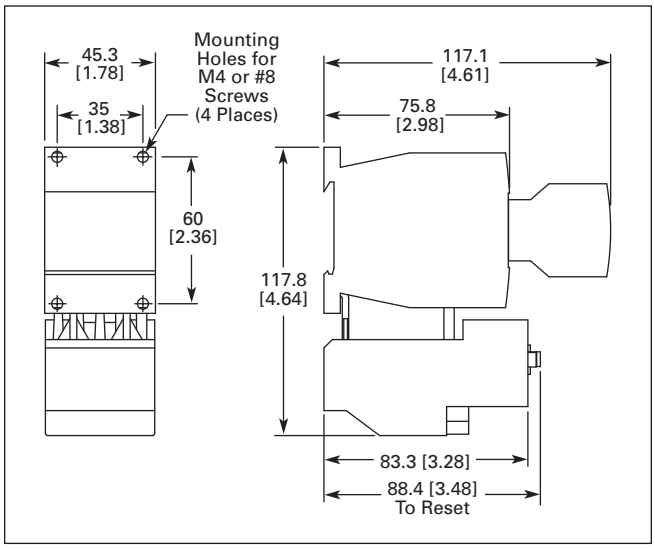

Figure 34-59. Frame B, XTAE007B – XTAE012B Starters with XTOB (7 – 12A) — Approximate Dimensions in mm [in.]

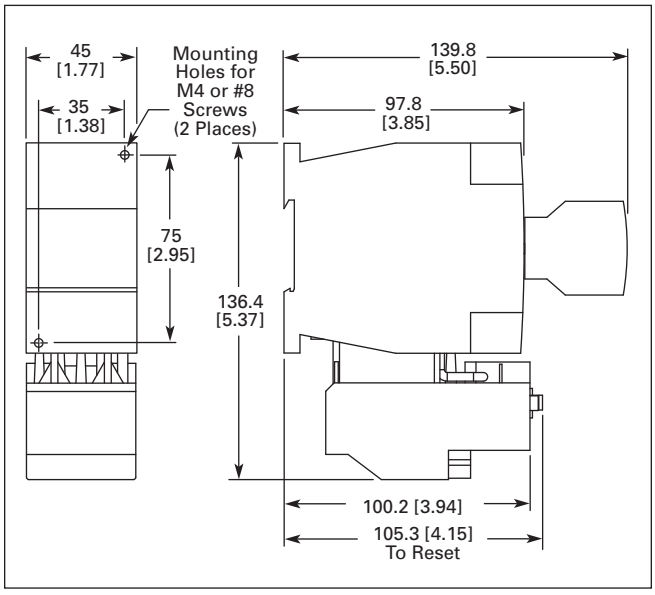

Figure 34-60. Frame C, XTAE018C – XTAE032C Starters with XTOB (18 – 32A) — Approximate Dimensions in mm [in.]

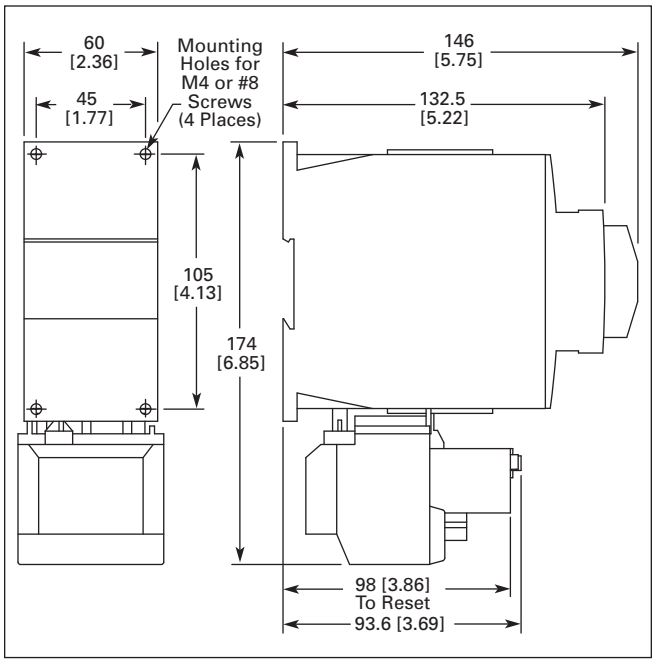

Figure 34-61. Frame D, XTAE040D – XTAE065D Starters with XTOB (40 – 65A) — Approximate Dimensions in mm [in.]

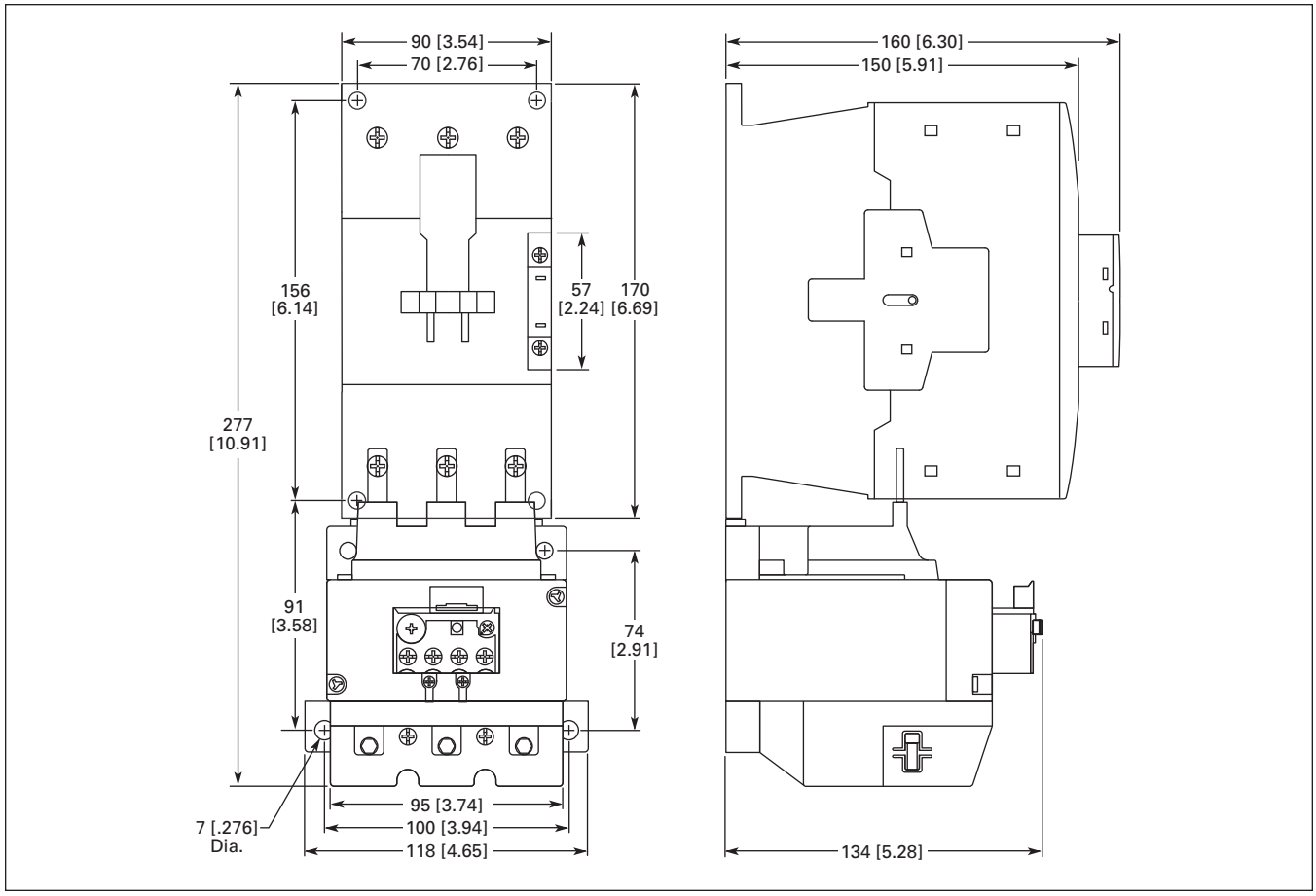

Figure 34-62. Frame F – G, XTAE080F – XTAE150G Starters with XTOB (80 – 150A) — Approximate Dimensions in mm [in.]

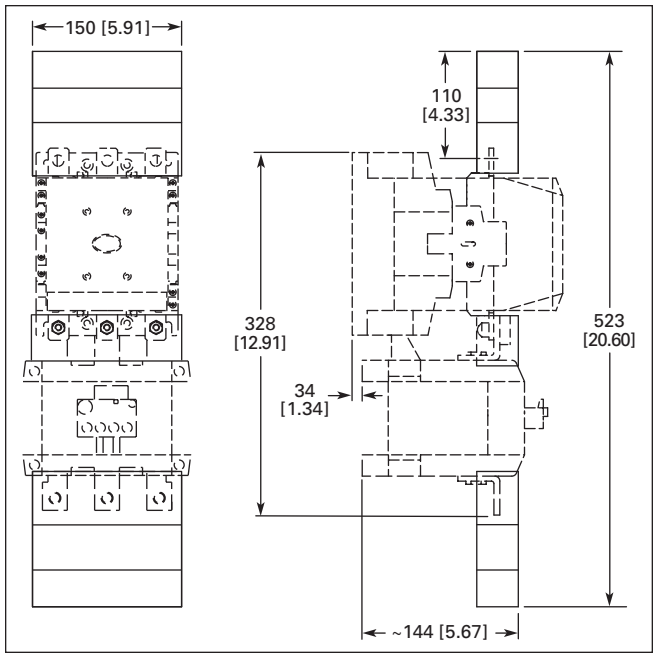

Figure 34-63. Frame L, XTAE185L – XTAE250L Starters with XTOB (185 – 250A) — Approximate Dimensions in mm [in.]

XTAE Starters with C396 Overload Relay

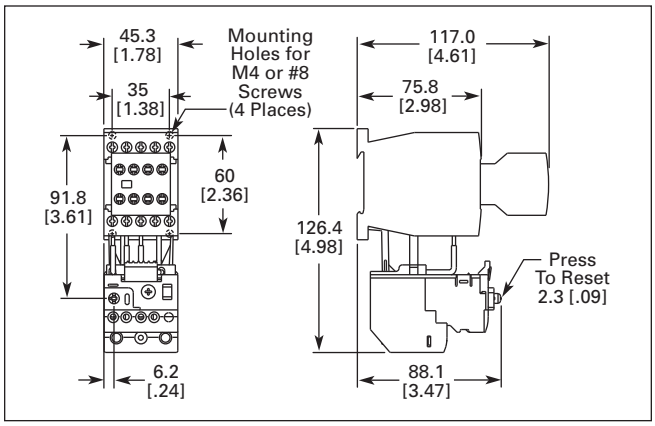

Figure 34-64. Frame B, XTAE007B – XTAE012B Starters with C396 (0.1 – 15A) — Approximate Dimensions in mm [in.]

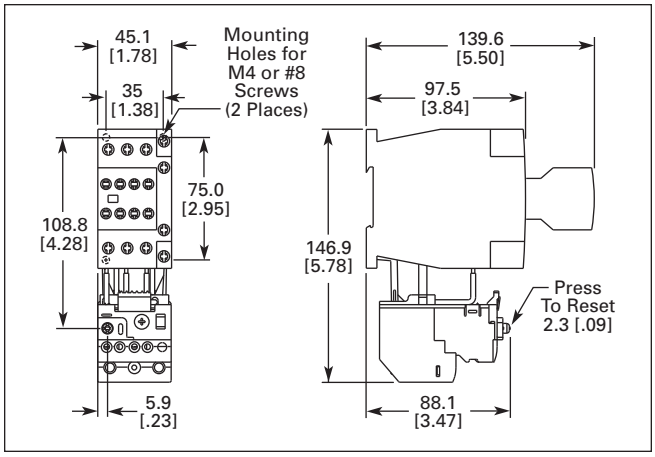

Figure 34-65. Frame C, XTAE018C – XTAE032C Starters with C396 (0.1 – 32A) — Approximate Dimensions in mm [in.]

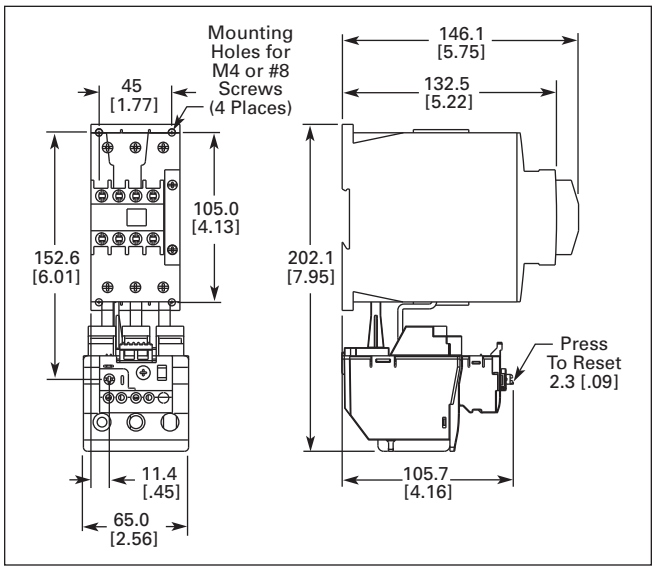

Figure 34-66. Frame D, XTAE040D – XTAE065D Starters with C396 (15 – 75A) — Approximate Dimensions in mm [in.]

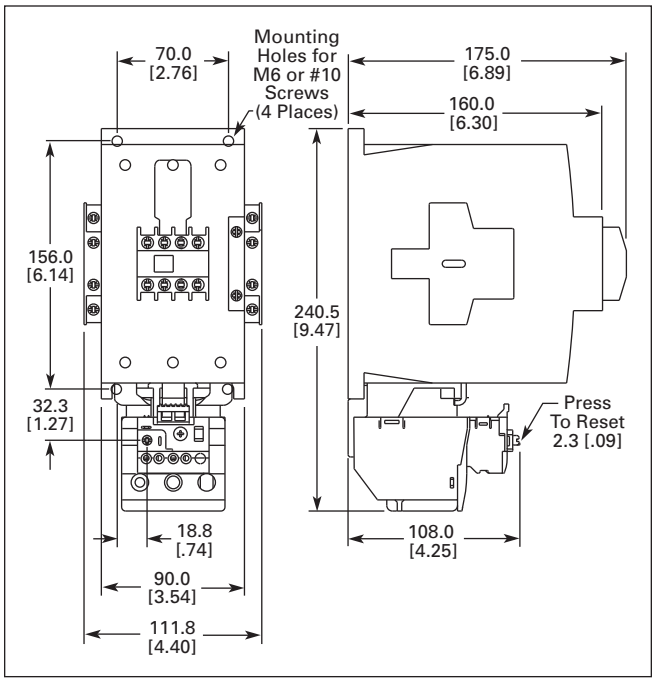

Figure 34-67. Frame F and G, XTAE080F – XTAE115G Starters with C396 (22 – 110A) — Approximate Dimensions in mm [in.]

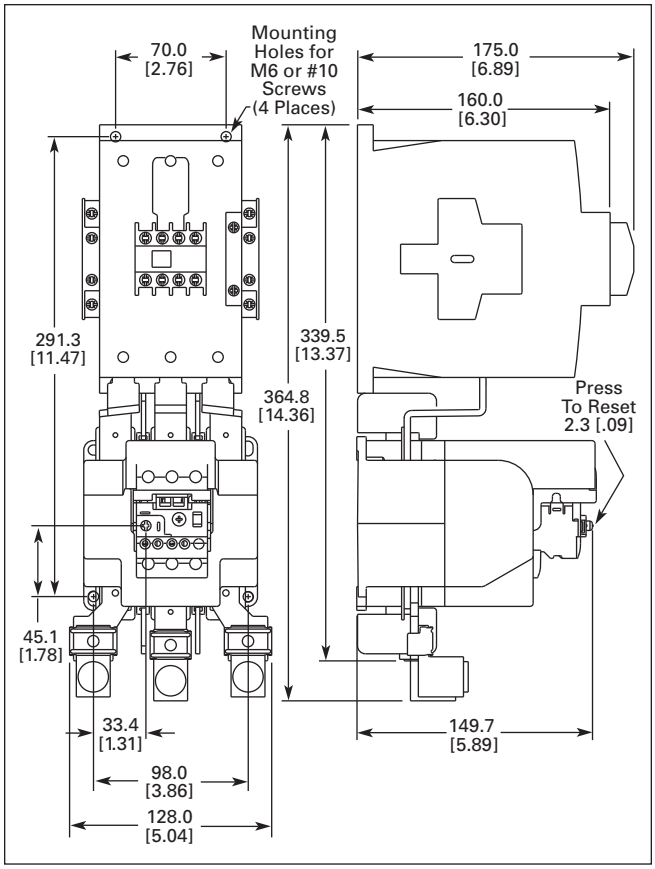

Figure 34-68. Frame G, XTAE115G – XTAE150G Starters with C396 (30 – 150A) — Approximate Dimensions in mm [in.]

34

Reversing Combination

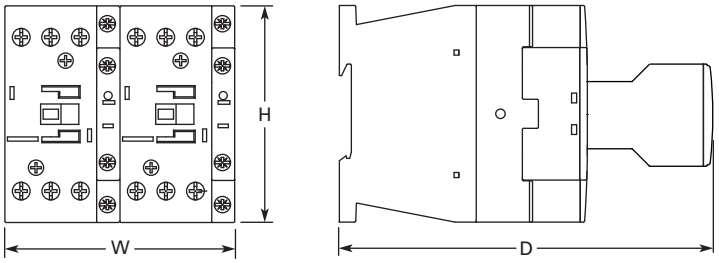

Frame B (7 – 15A)			Frame C (18 – 32A)			Frame D (40 – 65A)		
W	H	D	W	H	D	W	H	D
90 [3.54]	68 [2.68]	117 [4.61]	90 [3.54]	85 [3.34]	138 [5.43]	110 [4.33]	115 [4.53]	146.8 [5.78]

Figure 34-69. XTCR Reversing Combination Frame B – D — Approximate Dimensions in mm [in]

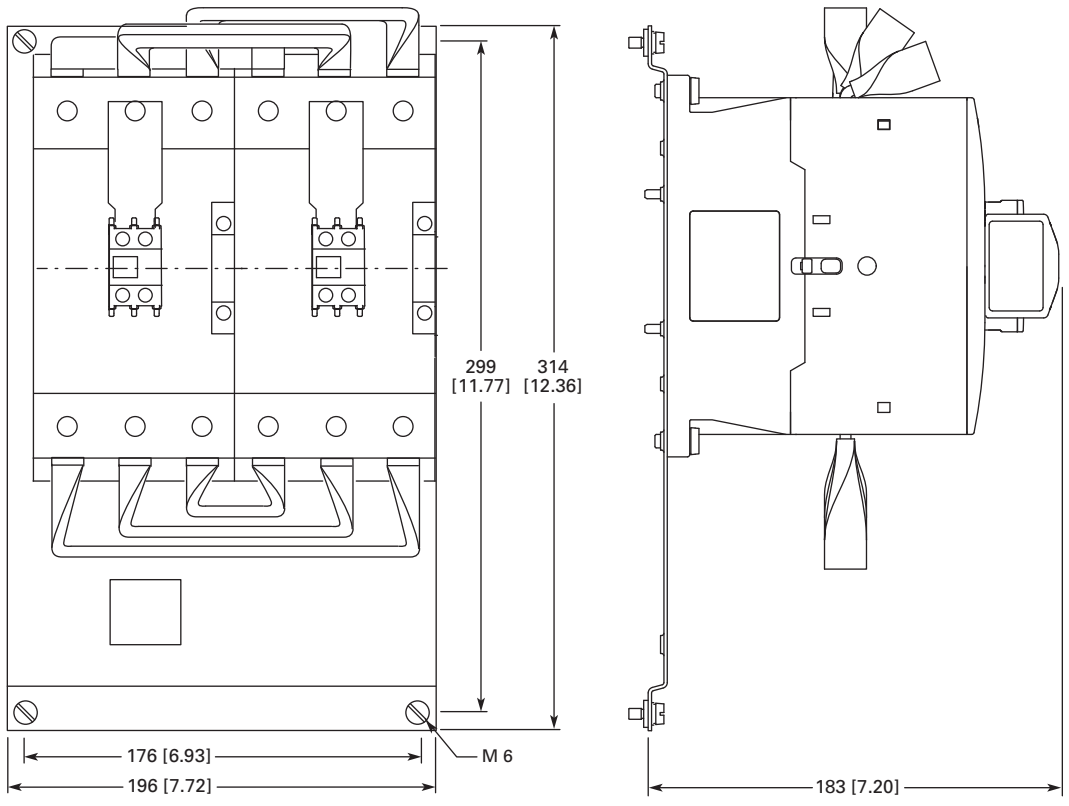

Figure 34-70. XTCR Reversing Combination Frame F – G — Approximate Dimensions in mm [in]

Star-Delta Combination

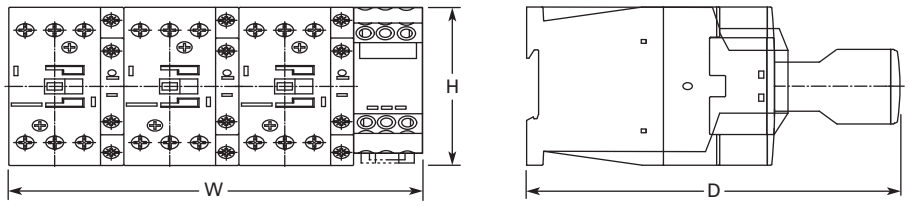

Frame B			Frame C			Frame D		
W	H	D	W	H	D	W	H	D
158 [6.22]	68 [2.68]	117 [4.61]	158 [6.22]	85 [3.34]	138 [5.43]	188 [7.40]	115 [4.53]	146.8 [5.78]

Figure 34-71. Star-Delta Combination Frame B – D — Approximate Dimensions in mm [in]

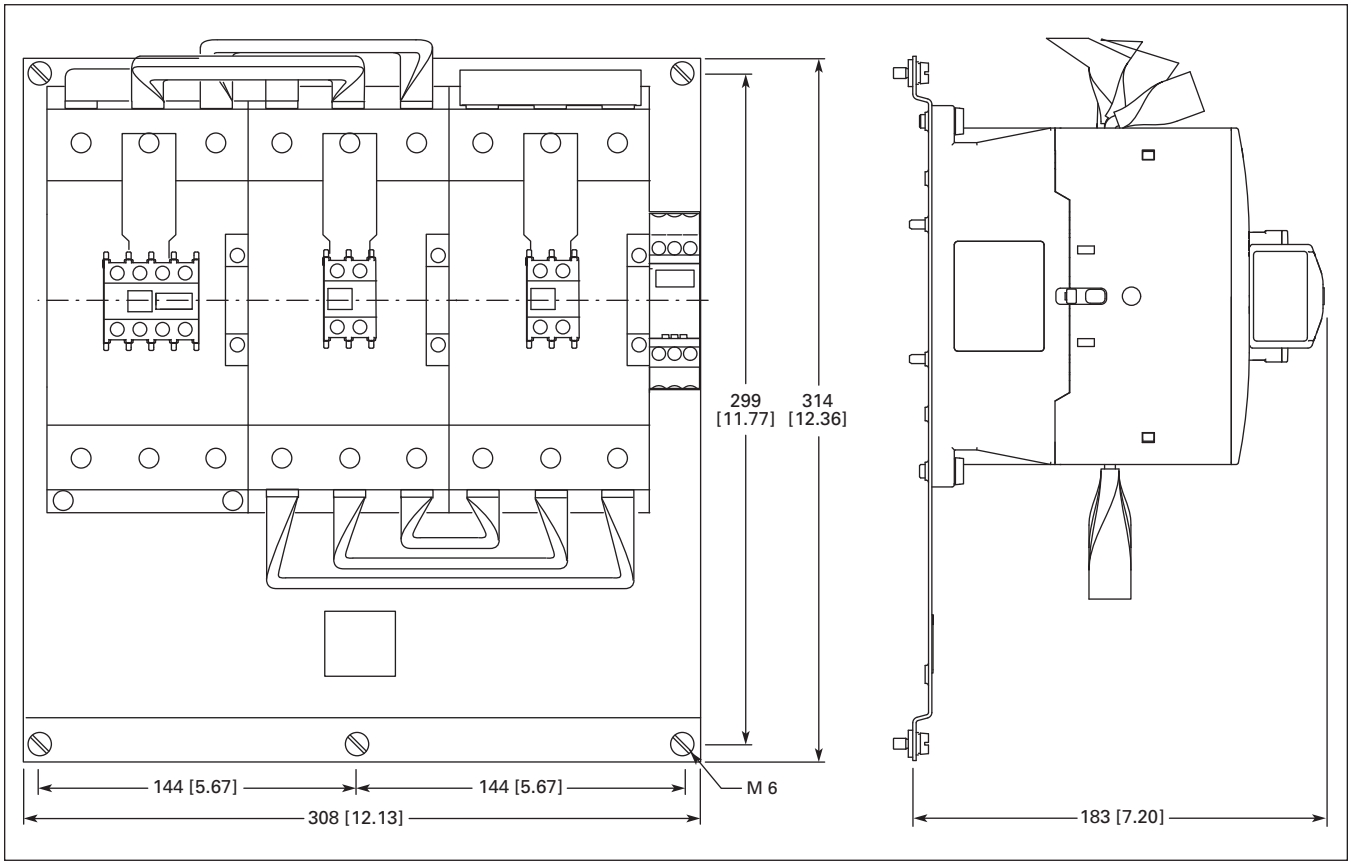

Figure 34-72. Star-Delta Combination Frame F – G — Approximate Dimensions in mm [in]

Mechanical Interlock

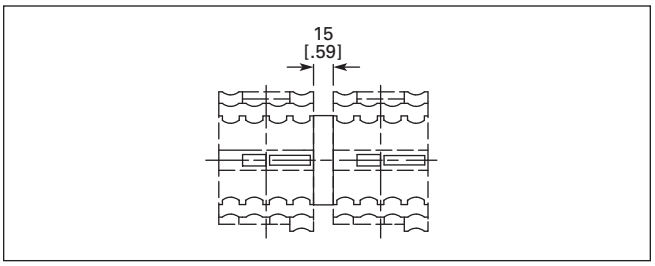

Figure 34-73. Frame L – M. XTCEXMLM Mechanical Interlock — Approximate Dimensions in mm [in]

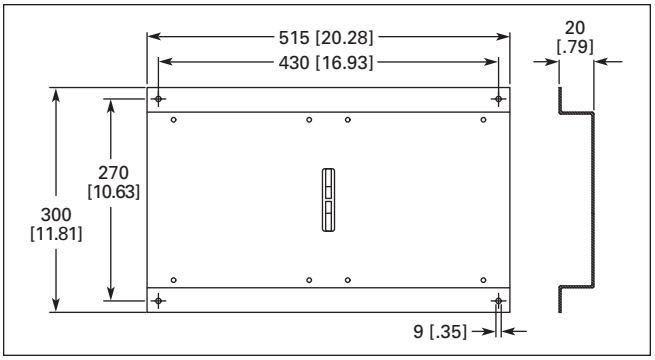

Figure 34-74. XTCEXMLN — Approximate Dimensions in mm [in]

Contactor with Terminal Shroud

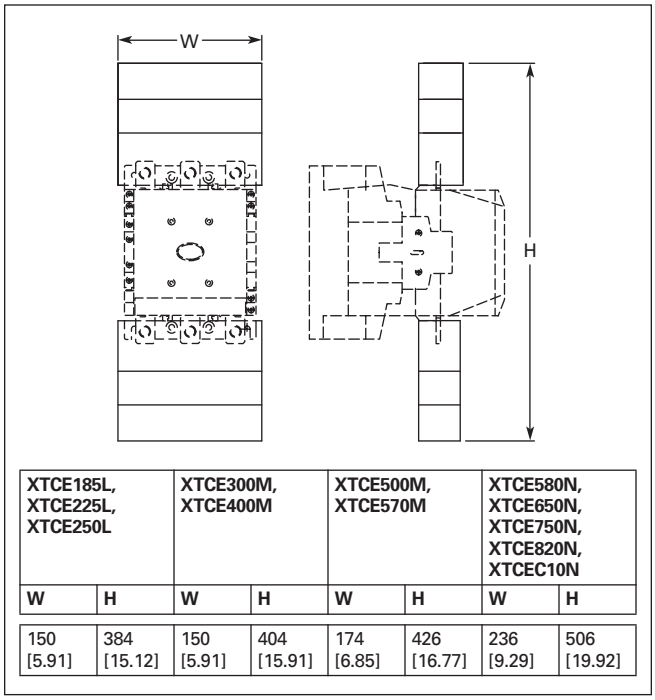

XTCE185L, XTCE225L, XTCE250L		XTCE300M, XTCE400M		XTCE500M, XTCE570M		XTCE580N, XTCE650N, XTCE750N, XTCE820N, XTCEC10N	
W	**H**	**W**	**H**	**W**	**H**	**W**	**H**
150 [5.91]	384 [15.12]	150 [5.91]	404 [15.91]	174 [6.85]	426 [16.77]	236 [9.29]	506 [19.92]

Figure 34-75. Frame L – N Contactors, XTCE185L – XTCEC10N, with Terminal Shroud XTLEXTS — Approximate Dimensions in mm [in]

Suppressor

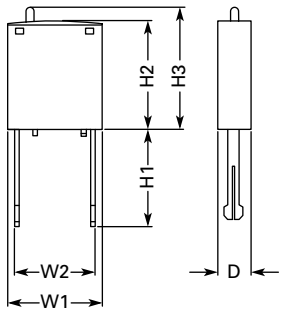

	W1	W2	H1	H2	H3	D
XTCEXRSB... **XTCEXVSB...** **XTCEXVSLB...** **XTCEXDSB...**	25 [.98]	9.2 [.36]	25.9 [1.02]	28 [1.10]	32 [1.26]	9 [.35]
XTCEXRSC... **XTCEXVSC...** **XTCEXVSLC...**	25 [.98]	9.2 [.36]	16 [.63]	28 [1.10]	32 [1.26]	9 [.35]
XTCEXRSF... **XTCEXVSF...** **XTCEXVSLF...**	25 [.98]	20 [.79]	18.5 [.73]	28 [1.10]	32 [1.26]	9 [.35]

Figure 34-76. Suppressor — Approximate Dimensions in mm [in]

Cable Terminal Block

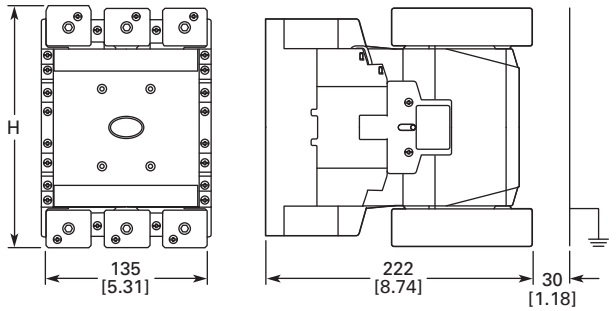

	H
XTCE185L – XTCE250L	198 [7.80]
XTCE300M – XTCE400M	218 [8.58]

Figure 34-77. XTCEXTLA — Approximate Dimensions in mm [in]

Flat Strip Conductor Terminals

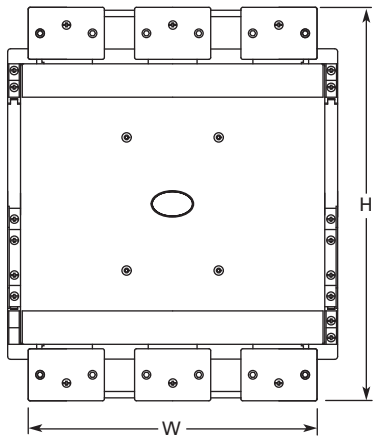

	W	H
XTCE500M – XTCE570M	171 [6.73]	232 [9.13]
XTCE750N – XTCE820N	231 [9.09]	310 [12.20]

Figure 34-78. XTCEXTFB — Approximate Dimensions in mm [in]

Three-Phase Commoning Link

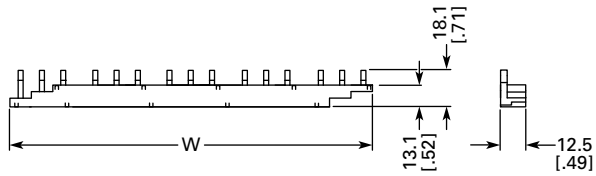

	W
XTCEXCLK3B	112 [4.41]
XTCEXCLK4B	157 [6.18]
XTCBXCLK5B	202 [7.95]

Figure 34-79. Frame B Three-Phase Commoning Link — Approximate Dimensions in mm [in]

Contents

Description	*Page*
Overload Relays — XTOB, XTOT	
Catalog Number Selection	**34-104**
Product Selection	**34-105**
Accessories	**34-106**
Technical Data and Specifications	**34-108**
Dimensions	**34-110**
Reference Data	**34-210**



XTOB Overload Relay



XTOT Overload Relay

Catalog Number Selection

Table 34-128. *XT* IEC Overload Relays — Catalog Numbering System

XT OB P16 B C1 S

Designation
XT = ***XT*** Line of IEC Control

Type
OB = Bimetallic Overload Relay
OT = Current Transformer Overload Relay

Overload Release	
Frame B	*Frame G*
P16 = 0.1 – 0.16A	**035** = 25 – 35A
P24 = 0.16 – 0.24A	**050** = 35 – 50A
P40 = 0.24 – 0.4A	**070** = 50 – 70A
P60 = 0.4 – 0.6A	**100** = 70 – 100A
001 = 0.6 – 1A	**125** = 95 – 125A
1P6 = 1.0 – 1.6A	**150** = 120 – 150A
2P4 = 1.6 – 2.4A	**175** = 145 – 175A
004 = 2.4 – 4A	*Frame L*
006 = 4 – 6A	**070** = 50 – 70A
010 = 6 – 10A	**100** = 70 – 100A
012 = 9 – 12A	**125** = 95 – 125A
016 = 12 – 16A	**160** = 120 – 160A
Frame C	**220** = 160 – 220A
P16 = 0.1 – 0.16A	**250** = 200 – 250A
P24 = 0.16 – 0.24A	*Frame M*
P40 = 0.24 – 0.4A	**063** = 42 – 63A
P60 = 0.4 – 0.6A	**090** = 60 – 90A
001 = 0.6 – 1A	**125** = 85 – 125A
1P6 = 1.0 – 1.6A	**160** = 110 – 160A
2P4 = 1.6 – 2.4A	**240** = 160 – 240A
004 = 2.4 – 4A	**290** = 190 – 290A
006 = 4 – 6A	**400** = 270 – 400A
010 = 6 – 10A	**540** = 360 – 540A
016 = 10 – 16A	*Frame N*
024 = 16 – 24A	**063** = 42 – 63A
032 = 24 – 32A	**090** = 60 – 90A
Frame D	**125** = 85 – 125A
010 = 6 – 10A	**160** = 110 – 160A
016 = 10 – 16A	**240** = 160 – 240A
024 = 16 – 24A	**290** = 190 – 290A
040 = 24 – 40A	**400** = 270 – 400A
057 = 40 – 57A	**540** = 360 – 540A
065 = 50 – 65A	**630** = 420 – 630A
075 = 65 – 75A	
Frame F	
035 = 25 – 35A	
050 = 35 – 50A	
070 = 50 – 70A	
100 = 70 – 100A	

Frame Size Designation
B = 45 mm
C = 45 mm
D = 55 mm
G = 90 mm
L = 140 mm
BLANK = XTOT Only

Trip Class
C1 = Class 10A
C3 = Class 30

Mounting
BLANK Direct to Contactor
=
S = Separate Mount

Product Selection

Table 34-129. Overload Relay

	Overload Releases, I_r	Contact Sequence	Contact Configuration	For Use with Contactor Amp Range	Short-Circuit Protection (A) Fuse Type 1 Coordination, gG/gL	Fuse Type 2 Coordination, gG/gL	Maximum Circuit Breaker	CEC/NEC Fuse	Catalog Number	Price U.S. $
Frame B — Direct Mount										
	0.1 – 0.16	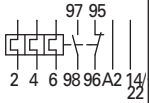	1NO-1NC	7 – 15A	25	0.5	25	3	**XTOBP16BC1**	
	0.16 – 0.24		1NO-1NC	7 – 15A	25	1	25	3	**XTOBP24BC1**	
	0.24 – 0.4		1NO-1NC	7 – 15A	25	2	25	3	**XTOBP40BC1**	
	0.4 – 0.6		1NO-1NC	7 – 15A	25	4	25	3	**XTOBP60BC1**	
	0.6 – 1		1NO-1NC	7 – 15A	25	4	25	3	**XTOB001BC1**	
	1 – 1.6		1NO-1NC	7 – 15A	25	6	25	6	**XTOB1P6BC1**	
	1.6 – 2.4		1NO-1NC	7 – 15A	25	10	25	6	**XTOB2P4BC1**	
	2.4 – 4		1NO-1NC	7 – 15A	25	16	25	15	**XTOB004BC1**	
	4 – 6		1NO-1NC	7 – 15A	25	20	25	20	**XTOB006BC1**	
	6 – 10		1NO-1NC	7 – 15A	50	25	25	35	**XTOB010BC1**	
	9 – 12		1NO-1NC	9 – 15A	50	25	25	45	**XTOB012BC1**	
	12 – 16		1NO-1NC	12 – 15A	50	25	30	45	**XTOB016BC1**	
Frame C — Direct Mount										
	0.1 – 0.16	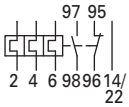	1NO-1NC	18 – 32A	25	0.5	25	3	**XTOBP16CC1**	
	0.16 – 0.24		1NO-1NC	18 – 32A	25	1	25	3	**XTOBP24CC1**	
	0.24 – 0.4		1NO-1NC	18 – 32A	25	2	25	3	**XTOBP40CC1**	
	0.4 – 0.6		1NO-1NC	18 – 32A	25	4	25	3	**XTOBP60CC1**	
	0.6 – 1		1NO-1NC	18 – 32A	25	4	25	3	**XTOB001CC1**	
	1 – 1.6		1NO-1NC	18 – 32A	25	6	25	6	**XTOB1P6CC1**	
	1.6 – 2.4		1NO-1NC	18 – 32A	25	10	25	6	**XTOB2P4CC1**	
	2.4 – 4		1NO-1NC	18 – 32A	25	16	25	15	**XTOB004CC1**	
	4 – 6		1NO-1NC	18 – 32A	25	20	25	20	**XTOB006CC1**	
	6 – 10		1NO-1NC	18 – 32A	50	25	25	25	**XTOB010CC1**	
	10 – 16		1NO-1NC	18 – 32A	63	35	30	25	**XTOB016CC1**	
	16 – 24		1NO-1NC	18 – 32A	100	35	30	25	**XTOB024CC1**	
	24 – 32		1NO-1NC	25 – 32A	125	63	30	25	**XTOB032CC1**	
Frame D — Direct Mount										
	6 – 10	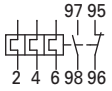	1NO-1NC	40 – 72A	50	25	25	25	**XTOB010DC1**	
	10 – 16		1NO-1NC	40 – 72A	63	35	25	25	**XTOB016DC1**	
	16 – 24		1NO-1NC	40 – 72A	63	50	30	25	**XTOB024DC1**	
	24 – 40		1NO-1NC	40 – 72A	125	63	125	125	**XTOB040DC1**	
	40 – 57		1NO-1NC	50 – 72A	160	80	150	150	**XTOB057DC1**	
	50 – 65		1NO-1NC	65 – 72A	160	100	150	200	**XTOB065DC1**	
	65 – 75		1NO-1NC	72A	200	125	150	200	**XTOB075DC1**	
Frame F – G — Direct Mount										
	25 – 35	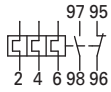	1NO-1NC	80 – 170A	125	100	125	125	**XTOB035GC1**	
	35 – 50		1NO-1NC	80 – 170A	160	125	150	200	**XTOB050GC1**	
	50 – 70		1NO-1NC	80 – 170A	250	160	150	200	**XTOB070GC1**	
	70 – 100		1NO-1NC	80 – 170A	315	200	400	400	**XTOB100GC1**	
	95 – 125		1NO-1NC	80 – 170A	315	250	500	400	**XTOB125GC1**	
	120 – 150		1NO-1NC	80 – 170A	315	250	600	600	**XTOB150GC1**	
	145 – 175		1NO-1NC	150 – 170A	315	250	600	600	**XTOB175GC1**	
Frame F – G — Separate Mount										
	25 – 35	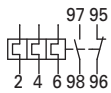	1NO-1NC	80 – 170A	125	100	125	125	**XTOB035GC1S**	
	35 – 50		1NO-1NC	80 – 170A	160	125	150	200	**XTOB050GC1S**	
	50 – 70		1NO-1NC	80 – 170A	250	160	150	200	**XTOB070GC1S**	
	70 – 100		1NO-1NC	80 – 170A	315	200	400	400	**XTOB100GC1S**	
	95 – 125		1NO-1NC	80 – 170A	315	250	500	400	**XTOB125GC1S**	
	120 – 150		1NO-1NC	80 – 170A	315	250	600	600	**XTOB150GC1S**	
	145 – 175		1NO-1NC	150 – 170A	315	250	600	600	**XTOB175GC1S**	
Frame L										
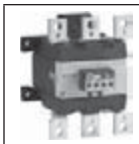	50 – 70	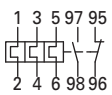	1NO-1NC	185 – 250A	250	160	150	200	**XTOB070LC1**	
	70 – 100		1NO-1NC	185 – 250A	315	200	400	400	**XTOB100LC1**	
	95 – 125		1NO-1NC	185 – 250A	315	250	500	400	**XTOB125LC1**	
	120 – 160		1NO-1NC	185 – 250A	400	250	600	600	**XTOB160LC1**	
	160 – 220		1NO-1NC	185 – 250A	400 ①	315 ①	800	800	**XTOB220LC1**	
	200 – 250		1NO-1NC	225 – 250A	400 ①	315 ①	600	700	**XTOB250LC1**	

① For separate mounting, short circuit Type 1 rating is 500A and short circuit Type 2 rating is 400A.

Notes:

Short circuit protection: Observe the maximum permissible fuse of the contactor with direct device mounting. See MN03402001E for more information on overload relays for Frame B – G.

Trip Class: 10A

Suitable for protection of EEx e-motors. EC prototype test certificate available upon request.

Observe manuals MN03402001E and MN03407001E, see **Table 34-134**.

Technical Data ..... **Page 34-108**
Dimensions ..... **Page 34-110**
Discount Symbol **1CD7**

Table 34-130. Current Transformer Operated Overload Relays ①

	Overload Releases, I_r	Contact Sequence	Contact Configuration	For Use with Contactor Amp Range	Short-Circuit Protection (A)				Catalog Number	Price U.S. $
					Type 1 Coordination, gG/gL	Type 2 Coordination, gG/gL	Circuit Breaker	CEC/NEC Fuse		
Frame M – N — Separate Mount										
	42 – 63	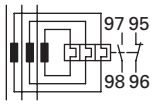	1NO-1NC	300 – 500A	—	—	150	200	**XTOT063C3S**	
	60 – 90		1NO-1NC	300 – 500A	—	—	250	250	**XTOT090C3S**	
	85 – 125		1NO-1NC	300 – 500A	—	—	500	400	**XTOT125C3S**	
	110 – 160		1NO-1NC	300 – 500A	—	—	600	600	**XTOT160C3S**	
	160 – 240		1NO-1NC	300 – 500A	—	—	600	700	**XTOT240C3S**	
	190 – 290		1NO-1NC	300 – 500A	—	—	600	700	**XTOT290C3S**	
	270 – 400		1NO1-NC	300 – 500A	—	—	1000	1000	**XTOT400C3S**	
	360 – 540		1NO-1NC	500A	—	—	600	1000	**XTOT540C3S**	
	420 – 630		1NO-1NC	630A	—	—	600	1000	**XTOT630C3S**	

① The main current parameters are defined by the main current wiring which is used.

Accessories

Table 34-131. DIN Rail or Panel Mount Adapter, Frame C – D ②

	For Use with…	Pkg. Qty.	Catalog Number	Price U.S. $
	XTOB…CC1	5	**XTOBXDINC**	
	XTOB…DC1	2	**XTOBXDIND**	

② Can be snap fitted on a top hat rail (DIN rail) to IEC/EN 60715 or can be screw fitted.

Table 34-132. Terminal Shroud

	For Use with…	Catalog Number	Price U.S. $
	XTOB…LC1	**XTOBXTSL**	

	For direct mounting of …	Catalog Number	Price U.S. $
	XTOB…LC1 to XTCE185L, XTCE225L or XTCE250L	**XTOBXTSCL**	

Table 34-133. Terminal Lug Kit — Set of (3) Lugs

Description	For Use with…	Pkg. Qty.	Catalog Number	Price U.S. $
Set of 3 Lugs #6 AWG-350MCM	XTOB…LC1	1	**XTOBXTLL**	

Table 34-134. Documentation — Manuals for Overload Monitoring of EEX e-motors

Publication Number	For Use with…
MN03402001E	XTOB…BC1 XTOB…CC1
MN03407001E	XTOB…DC1 XTOB…GC1

Dimensions ..... **Page 34-110**
Discount Symbol **1CD7**

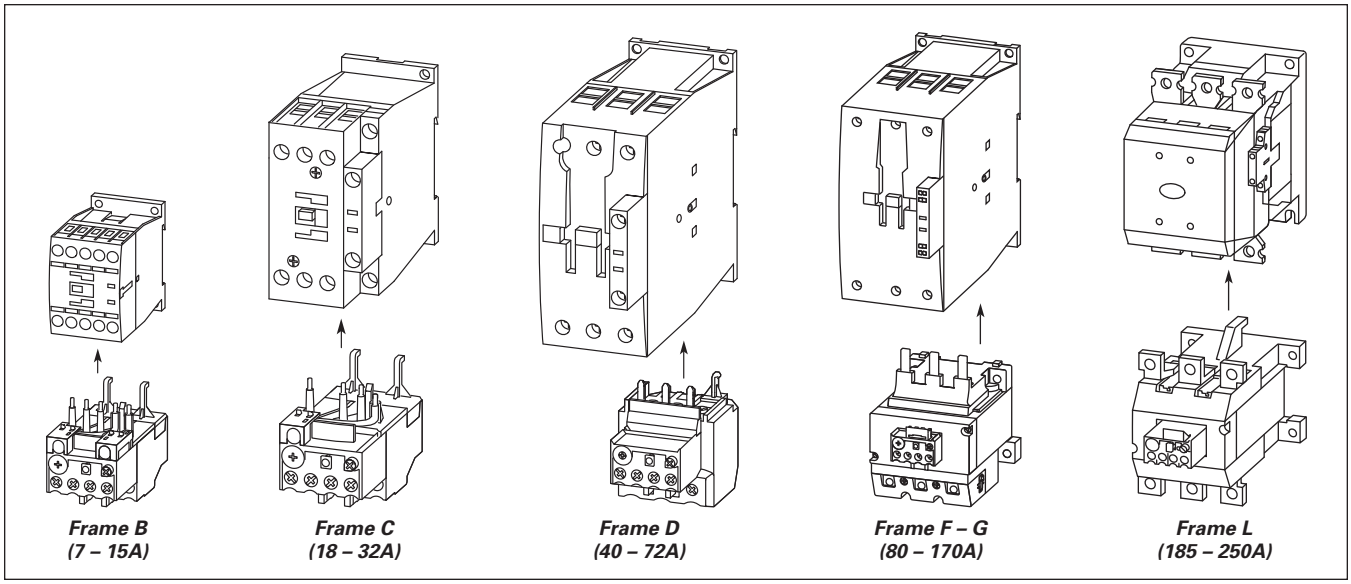

Figure 34-80. Overload Fitted Directly to the Contactor

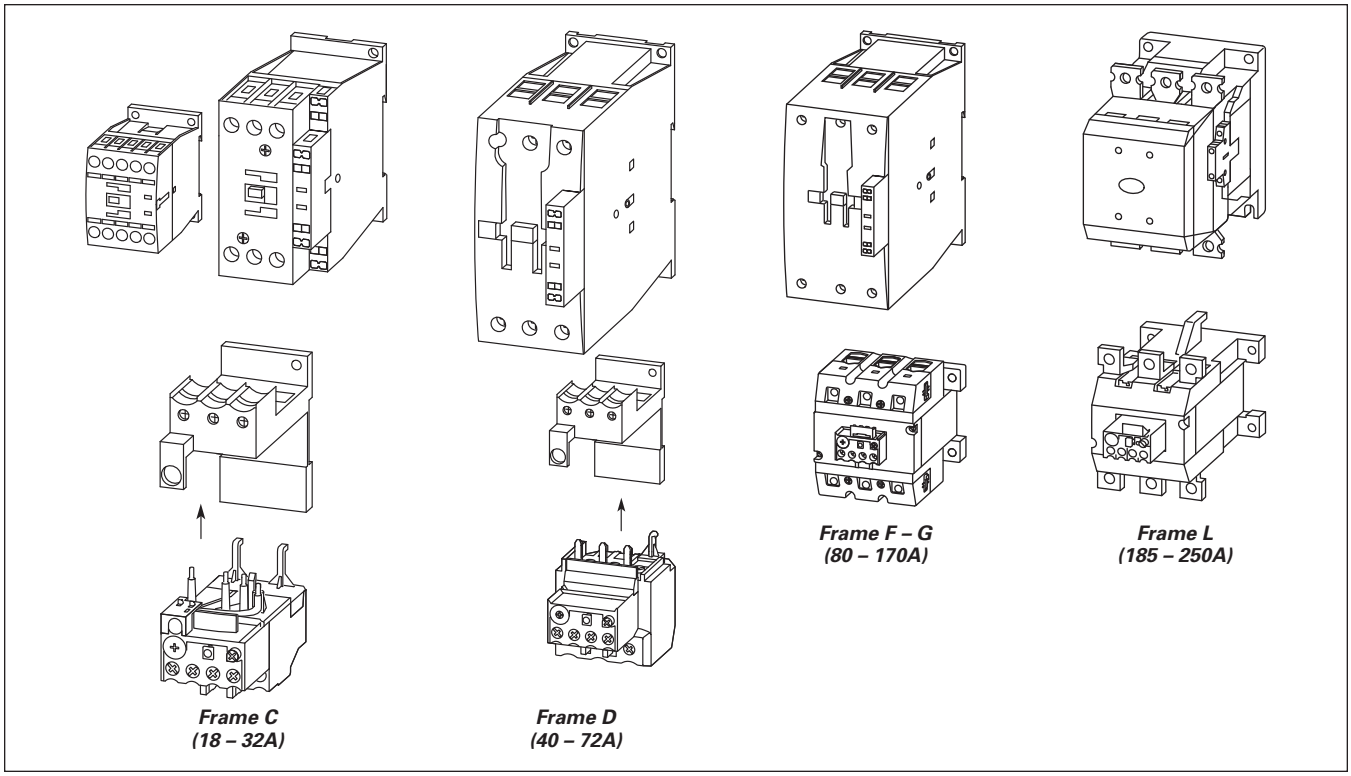

Figure 34-81. Overload Mounted Separately from the Contactor

34

Technical Data and Specifications

Table 34-135. XTOB Overload Relay — Technical Data and Specifications

Description	XTOB…BC1, XTOB…CC1	XTOB…DC1	XTOB…GC1, XTOB…GC1S	XTOB...LC1
General				
Standards	IEC/EN 60947, VDE 0660, UL, CSA			
Climate Proofing	Damp heat, constant, to IEC 60068-2-78; Damp heat, cyclic, to IEC 60068- 2-30			
Ambient Temperature ①	-25°C to +55°C [-13°F to 131°F]	-25°C to +55°C [-13°F to 131°F]	-25°C to +55°C [-13°F to 131°F]	-25°C to +50°C [-13°F to 22°F]
Temperature Compensation	Continuous	Continuous	Continuous	Continuous
Mechanical Shock Resistance (IEC/EN 60068-2-27) Half-Sinusoidal Shock 10 mS	 10g	 10g	 10g	 10g
Degree of Protection	IP20	IP20	IP20	P00
Protection Against Direct Contact when Actuated from Front (IEC 536)	Finger and back of hand proof	Finger and back of hand proof	Finger and back of hand proof	With terminal cover XTOBXTS...L
Insulation Voltage (Ui) V AC	690	690	690	1000
Overvoltage Category / Pollution Degree	III/3	III/3	III/3	III/3
Impulse Withstand Voltage (Uimp) V AC	6000	6000	6000	8000
Operational Voltage (Ue) V AC	690	690	690	1000
Safe Isolation to VDE 0106 Part 101 and part 101/A1 Between auxiliary contacts and main contacts (V AC) Between main contacts (V AC)	 440 440	 440 440	 440 440	 440 440
Overload Release Setting Range	0.1 – 32A	6 – 75A	25 – 150A	50 – 250A
Short Circuit Protection Maximum Fuse	See **Table 34-129** on **Page 34-105**.			
Temperature Compensation Residual Error > 40°C	<0.25	<0.25	<0.25	<0.25
Current Heat Loss (3 Conductors) Lower value of setting range, W Upper value of setting range	 2.5 6	 3 7.5	 16 28	 16 28
Terminal Capacity Solid, mm^2 Flexible with ferrule, mm^2 Flexible with cable lug, mm^2 Stranded with cable lug, mm^2	 2 x (1 – 6) 2 x (1 – 4) 2 x (1 – 6) ② — —	 2 x (1 – 16) 1 x 25 2 x (1 – 10) ③ — —	 2 x (4 – 16) 1 x (4 – 70) 2 x (4 – 50) — —	 — — — 95 120
Solid or Stranded, AWG	14 - 8	14 - 2	2 / 0	250MCM
Flat Conductor (number of segments x width x thickness, mm^2	—	—	—	6 x 16 x 18
Busbar — Width (mm)	—	—	—	20 x 3
Terminal Screw Tightening Torque Nm Lb-in	M4 1.8 16	M6 3.5 31	M10 10 88.5	M8 x 25 24 221.3
Tools Pozidriv screwdriver Standard screwdriver Hexagon socket head spanner (SW)	 Size 2 1 x 6 —	 Size 2 1 x 6 —	 — — 5 mm	 — — 13 mm
Auxiliary and Control Circuit Connections				
Impulse Withstand Voltage (Uimp) V AC	6000	6000	6000	6000
Overvoltage Category/Pollution Degree	III/3	III/3	III/3	III/3
Terminal Capacity Solid, mm^2 Flexible with ferrule, mm^2 Solid or Stranded (AWG)	 2 x (0.75 – 4) 2 x (0.75 – 2.5) 2 x (18 – 12)	 2 x (0.75 – 4) 2 x (0.75 – 2.5) 2 x (18 – 12)	 2 x (0.75 – 4) 2 x (0.75 – 2.5) 2 x (18 – 12)	 2 x (0.75 – 4) 2 x (0.75 – 2.5) 2 x (18 – 12)
Terminal Screw Tightening Torque Nm Lb-in	M3.5 0.8 – 1.2 7 – 10.6	M3.5 0.8 – 1.2 7 – 10.6	M3.5 0.8 – 1.2 7 – 10.6	M3.5 0.8 – 1.2 7 – 10.6
Tools Pozidriv screwdriver Standard screwdriver	 Size 2 1 x 6	 Size 2 1 x 6	 Size 2 1 x 6	 Size 2 1 x 6
Rated Insulated Voltage (Ui) V AC	500	500	500	500
Rated Operational Voltage	500	500	500	500
Safe Isolation to VDE 0106 Part 101 and part 101/A1 Between auxiliary contacts	 240	 240	 240	 240
Conventional Thermal Current, I_{th}	6	6	6	—

① Ambient Temperature Operating Range to IEC/EN 60947, PTB: -5°C to +50°C.
② 6 mm^2 flexible with ferrules to DIN 46228.
③ Main contact terminal capacity, solid and stranded conductors with ferrules: When using 2 conductors use identical cross-section.

Table 34-135. XTOB Overload Relay — Technical Data and Specifications (Continued)

Description	XTOB…BC1, XTOB…CC1	XTOB…DC1	XTOB…GC1, XTOB…GC1S	XTOB...LC1
Auxiliary and Control Circuit Connections (Continued)				
Rated Operational Current — AC-15				
Make Contact				
120V	1.5	1.5	1.5	1.5
240V	1.5	1.5	1.5	1.5
415V	0.5	0.5	0.5	0.5
500V	0.5	0.5	0.5	0.5
Break Contact				
120V	1.5	1.5	1.5	1.5
240V	1.5	1.5	1.5	1.5
415V	0.9	0.9	0.9	0.9
500V	0.8	0.8	0.8	0.8
Rated Operational Current — DC-13 L/R ≤ 15 mS ①				
24V	0.9	0.9	0.9	0.9
60V	0.75	0.75	0.75	0.75
110V	0.4	0.4	0.4	0.4
220V	0.2	0.2	0.2	0.2
Short Circuit Rating without Welding Maximum Fuse, A gG/gl	6	6	6	6

① Rated operational current: Making and breaking conditions to DC-13, L/R constant as stated.

Tripping Characteristics

These tripping characteristics are the mean values of the spread at 20°C ambient temperature in a cold state.

Tripping time depends on response current. With devices at operating temperature, the tripping time of the overload relay reduces to approximately 25% of the read off value. Specific characteristics for each individual setting range can be found in MN03402001E.

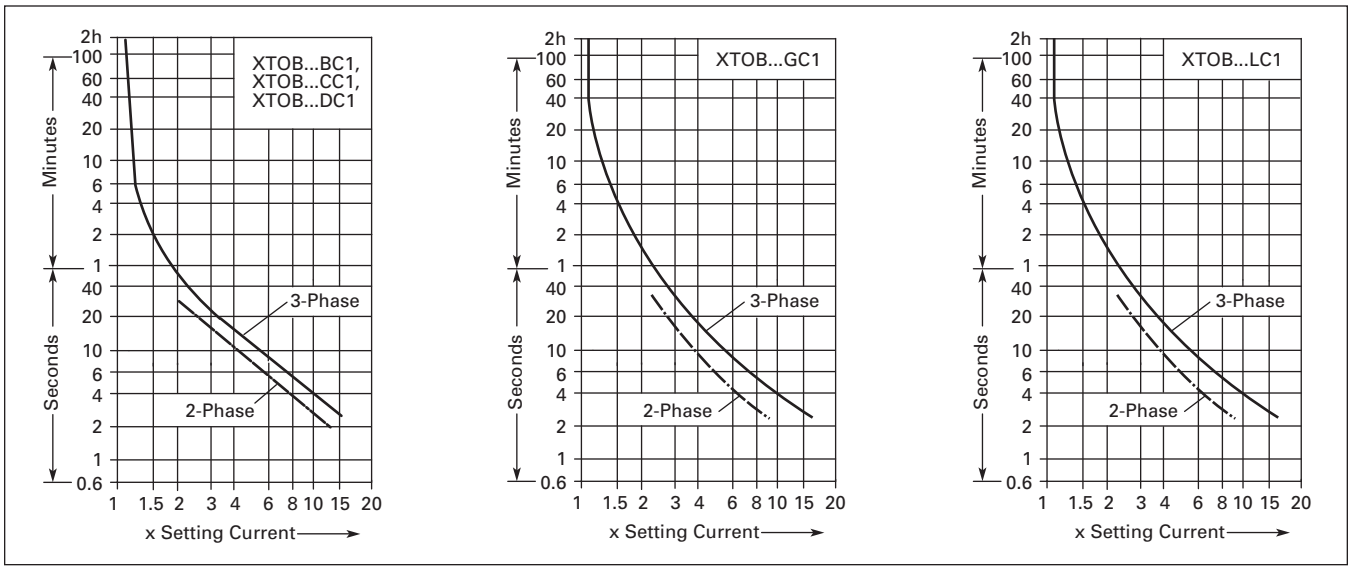

Figure 34-82. Tripping Characteristics

Instructional Leaflets

Table 34-136. Instructional Leaflets

Publication Number	Description
Pub51221	XTOB, D Frame Overload Relays (Inside of Packaging)
Pub51222	XTOB, B – C Frame Overload Relays (Inside of Packaging)

34

Dimensions

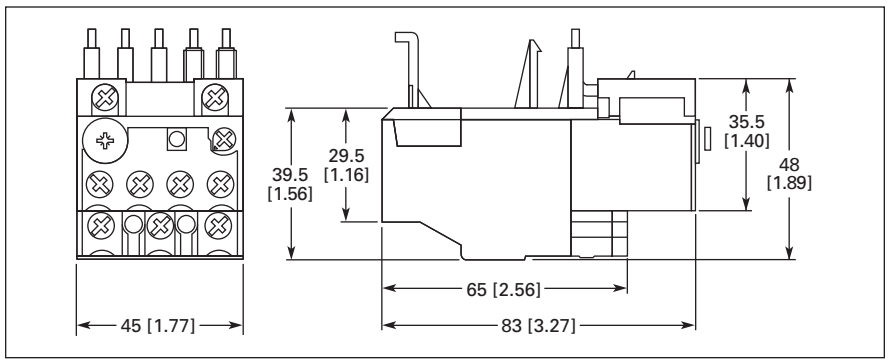

Figure 34-83. Frame B – C, XTOB…BC1 and XTOB…CC1 Overload Relays — Approximate Dimensions in mm [in]

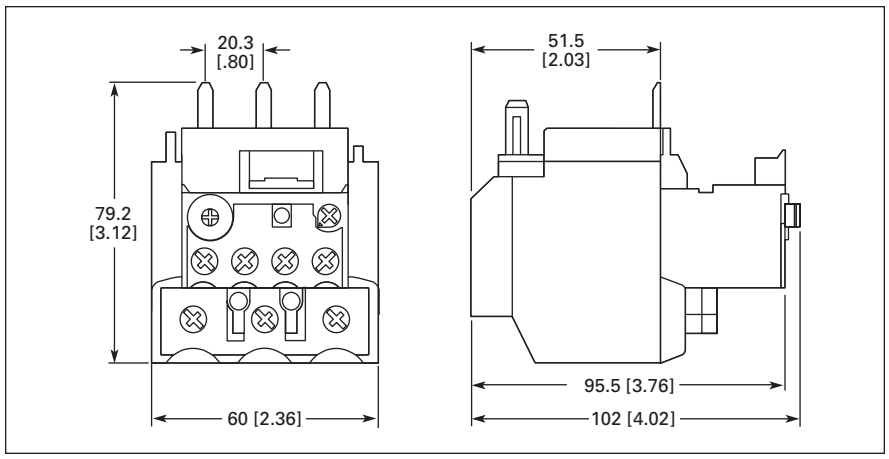

Figure 34-84. Frame D, XTOB…DC1 Overload Relay — Approximate Dimensions in mm [in]

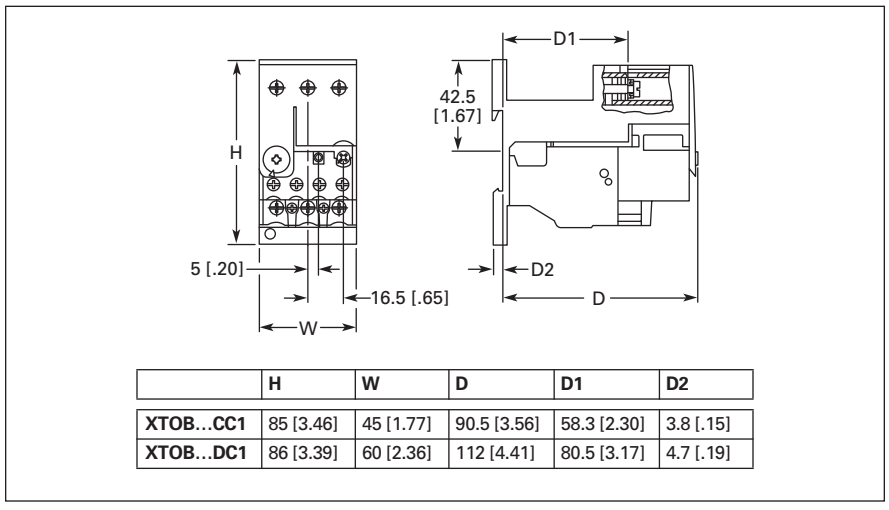

	H	W	D	D1	D2
XTOB…CC1	85 [3.46]	45 [1.77]	90.5 [3.56]	58.3 [2.30]	3.8 [.15]
XTOB…DC1	86 [3.39]	60 [2.36]	112 [4.41]	80.5 [3.17]	4.7 [.19]

Figure 34-85. Frame B – C, XTOBXDINC DIN Rail or Panel Mount Adapter and Frame D, XTOBXDIND DIN Rail or Panel Mount Adapter — Approximate Dimensions in mm [in]

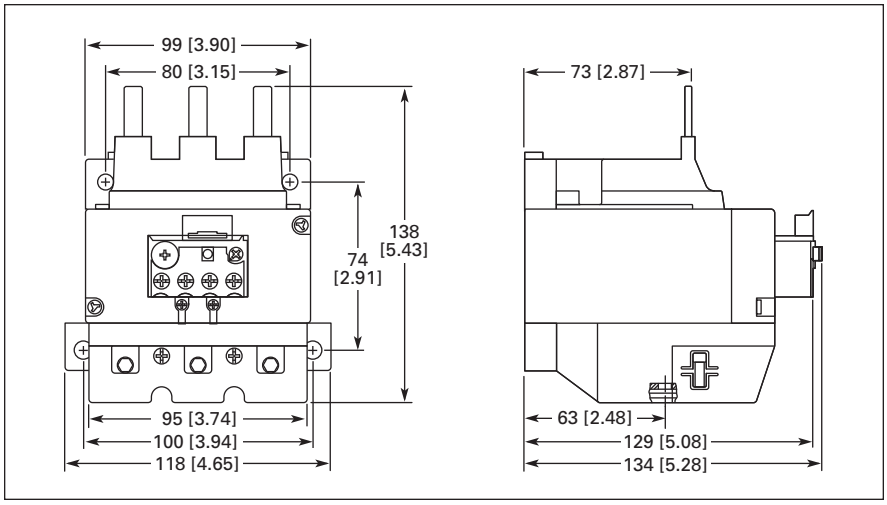

Figure 34-86. Frame F – G, XTOB…GC1 Overload Relay — Approximate Dimensions in mm [in]

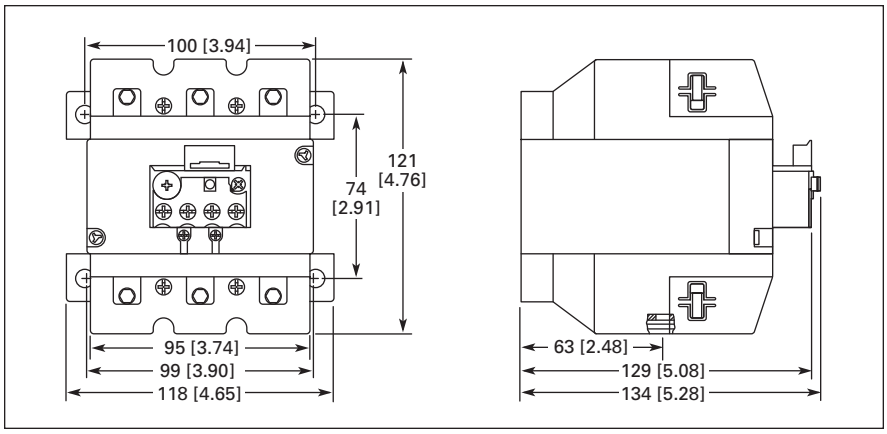

Figure 34-87. Frame F – G, XTOB…G1CS Overload Relay — Approximate Dimensions in mm [in]

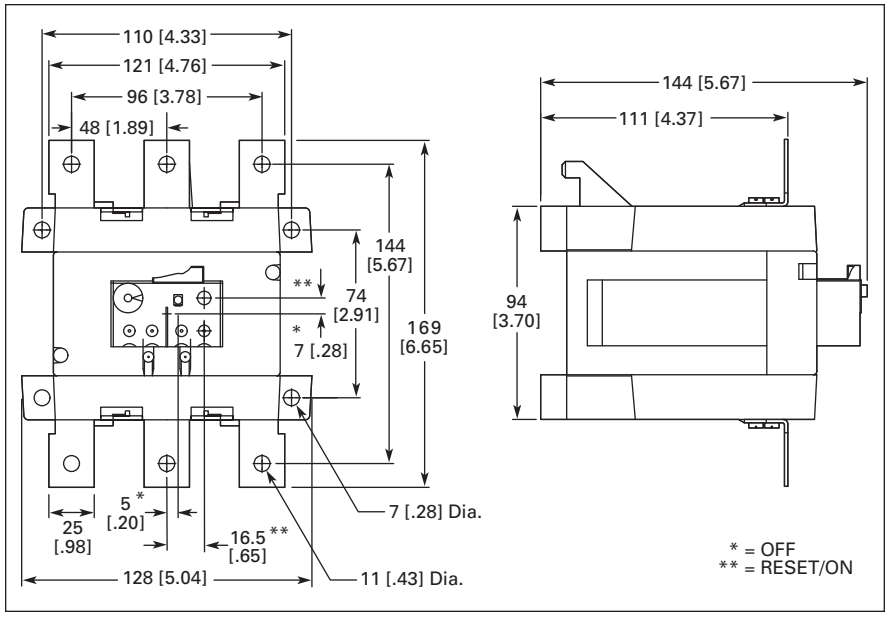

Figure 34-88. Frame L, XTOB…LC1 Overload Relay — Approximate Dimensions in mm [in]

Current Transformer Operated Overload Relay

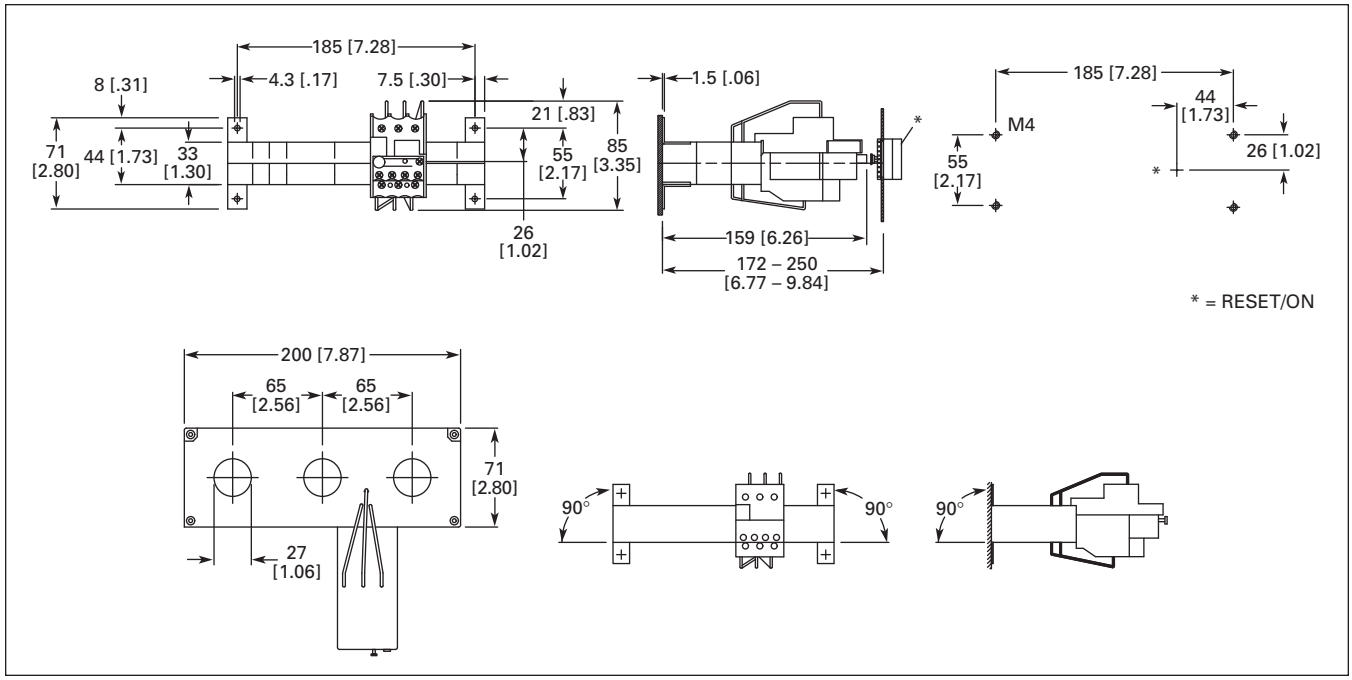

Figure 34-89. XTOT…C3S — Approximate Dimensions in mm [in]

Contents

Description	*Page*
Overload Relays — C396	
Catalog Number Selection	**34-113**
Product Selection	**34-114**
Accessories	**34-115**
Technical Data and Specifications	**34-116**
Dimensions	**34-117**
Reference Data	**34-210**



C396 Electronic Overload Relay

Product Description

The C396 is a self-powered, robust electronic overload designed for integrated use with Freedom NEMA, ***XT*** IEC, and DP contactors. The overload can be ordered as a stand-alone version that is designed for Panel-Mounting and for use on 35 mm DIN rail. The C396 has an FLA range of 0.1 – 150 Amps with internal CTs, and up to 1500 Amps using external CTs.

Features

- Standard Version: Selectable trip class (5, 10, 20, 30) with Selectable Manual or Auto Reset
- Broad 5:1 FLA range
- Self-Powered Design, will accept AC voltages from 12 – 690V 50/60 Hz
- Ambient Temperature Compensation
- Low Heat Generation
- Phase Loss Protection
- Phase Unbalance Protection
- Electrically isolated 1NO-1NC Contacts (Push-to-Test)
- Trip Status Indicator
- FLA range of 0.1 – 1500 Amps

Standards and Certifications

- UL Listed Components: Stand-alone, starter-mounted devices and remote reset kit.
- CSA Certified Components: Stand-alone, starter-mounted devices and remote reset kit.
- IEC EN 60947-4-1, EN 60947-5-1
- CE
- RoHS

34

Catalog Number Selection

Table 34-137. C396 Electronic Overload Relays — Catalog Numbering System

C396 A 2 A P05 SEL AX

Device Type
C396 = C396 Electronic Overload Relay

Frame Size
A = 45 mm
B = 65 mm
C = 110 mm

Feature Set	Reset Type
2 = Standard	**A** = Auto

Max. Amperes Current Rating
Frame A (45 mm)
P05 = 0.1 – 0.5
002 = 0.4 – 2.0
005 = 1 – 5
008 = 1.6 – 8
032 = 6.4 – 32
045 = 9 – 45
Frame B (65 mm)
075 = 15 – 75
110 = 22 – 110
Frame C (110 mm)
150 = 30 – 150

Stand-Alone Overload Relay Suffix
AX = All Frame Sizes
XT **IEC Adapter Suffix**
Frame B **XB** = 0.1 – 0.5A, 0.4 – 2.0A, 1 – 5A, 1.6 – 8A, 6.4 – 32A
Frame C **XC** = 0.1 – 0.5A, 0.4 – 2.0A, 1 – 5A, 1.6 – 8A, 6.4 – 32A
Frame D **XD** = 6.4 – 32A, 9 – 45A, 15 – 75A
Frame F – G **XF** = 22 – 110A

Class
SEL = Selectable

Product Selection



Frame C XT Starter with C396 Electronic Overload



Cat. No. C396C3A150SELAX with C396CBARXT

Table 34-138. C396 Stand-Alone Overload Relay

FLA Range (Amps)	Description	Catalog Number	Price U.S. $
45 mm Overload Frame Size ①			
0.1 – 0.5 0.4 – 2.0 1 – 5 1.6 – 8 6.4 – 32 9 – 45	—	**C396A2AP05SELAX** **C396A2A002SELAX** **C396A2A005SELAX** **C396A2A008SELAX** **C396A2A032SELAX** **C396A2A045SELAX**	
65 mm Overload Frame Size ①			
15 – 75 22 – 110	—	**C396B2A075SELAX** **C396B2A110SELAX**	
110 mm Overload Frame Size ②			
30 – 150	—	**C396C2A150SELAX**	

① Overload comes with a panel/DIN rail mounting adapter assembled. No separate mounting adapter accessory offered.

② Panel mount only! Overload comes with integrated pass-through holes for power wires. Bus Bar Kit (C396CBAR or C396CBARXT, see **Table 34-141**) and Lug Kit (C396CLUG) must be purchased separately if customer refers not to use pass-through capability.

Table 34-139. Current Transformer Kits for Use with Stand-Alone Overload Relay C396A2A005SELAX ③

FLA Range (Amps)	Description	Catalog Number	Price U.S. $
60 – 300	300: 5 Panel-mount CT Kit with integrated, pass-through holes. Kit includes CT, bus bars, lugs and hardware to mount C396A2A005SELAX(*not* included).	**C396CTK300**	
120 – 600	600: 5 Panel-mount CT Kit with integrated, pass-through holes. Kit includes CT, bus bars, lugs andhardware to mount C396A2A005SELAX (*not* included).	**C396CTK600**	
200 – 1000	1000: 5 Panel-mount CT Kit with integrated, pass-through holes. Kit includes CT, bus bars, lugs and hardware to mount C396A2A005SELAX (*not* included).	**C396CTK1000**	
300 – 1500	1500: 5 Panel-mount CT Kit with integrated, pass-through holes. Kit includes CT, bus bars, lugs and hardware to mount C396A2A005SELAX (*not* included).	**C396CTK1500**	

③ C396A2A005SELAX is *not* included in the current transformer kits. This item must be ordered separately.

Table 34-140. C396 Overload for Integrated Use with *XT* IEC Contactors

FLA Range (Amps)	*XT* IEC Contactor Frame Size / Width	Catalog Number	Price U.S. $
45 mm Overload Frame Size			
0.1 – 0.5 0.4 – 2.0 1 – 5 1.6 – 8 6.4 – 32	B / 45 mm B / 45 mm B / 45 mm B / 45 mm B / 45 mm	**C396A2AP05SELXB** **C396A2A002SELXB** **C396A2A005SELXB** **C396A2A008SELXB** **C396A2A032SELXB**	
0.1 – 0.5 0.4 – 2.0 1 – 5 1.6 – 8 6.4 – 32	C / 45 mm C / 45 mm C / 45 mm C / 45 mm C / 45 mm	**C396A2AP05SELXC** **C396A2A002SELXC** **C396A2A005SELXC** **C396A2A008SELXC** **C396A2A032SELXC**	
6.4 – 32 9 – 45	D / 55 mm D / 55 mm	**C396A2A032SELXD** **C396A2A045SELXD**	
65 mm Overload Frame Size			
15 – 75	D / 55 mm	**C396B2A075SELXD**	
22 – 110	F – G / 90 mm	**C396B2A110SELXF**	
110 mm Overload Frame Size — Stand-Alone or Direct to *XT* Contactor with Indicated Kit			
30 – 150	G / 90 mm	**C396C2A150SELAX** ④	
110 mm ***XT*** Bus Bar Kit		**C396CBARXT**	

④ Catalog Number shown is for Stand-Alone C396 Overload Relay. For direct connection to ***XT*** Frame G contactor, order additional ***XT*** Bus Bar Kit, C396CBARXT, shown in **Tables 34-140** and **34-141**. If load side lugs are required, order C396CLUG (set of 3).

Technical Data . . . . . **Page 34-116**
Dimensions . . . . . **Pages 34-117, 34-118**
Accessories . . . . . **Page 34-49**
Discount Symbol **1CD7**

Accessories

Table 34-141. C396 Electronic Overload Accessories

	Description	Catalog Number	Price U.S. $
	Reset Bar Kit ① assembles to the top of the overload to increase reset area.	**C396ARST**	
	110 mm Lug Kit ①③	**C396CLUG**	
	110 mm Bus Bar Kit ①④	**C396CBAR**	
	110 mm ***XT*** Bus Bar Kit ①④	**C396CBARXT**	
 ***C396ARST + C396RR_ _ _ _ _ Assembled to a C396 Overload Relay***	Remote Reset 24V DC ①⑥	**C396RR024DC**	
	Remote Reset 24V AC ①⑥	**C396RR024AC**	
	Remote Reset 120V AC ①⑥	**C396RR120AC**	
	Remote Reset 240V AC ①⑥	**C396RR240AC**	
	Mechanical Reset with E22 Flush Push-button and Mechanical Push Rod ②⑤ Plastic Black Bezel Chrome Bezel	 **E22PB6N29L** **E22P6N29L**	
	Mechanical Push Rod — for external mechanical reset ②⑦	**E22MRL**	
	Mounting Hole Adapter Kit ②⑧	**E22ARK**	

① Discount Symbol **1CD7**.
② Discount Symbol **1CD1**.
③ Set of 3 lugs and hardware, 2 sets are required to wire line and load sides. Bus Bar Kit (C396CBAR or C396CBARXT) is needed to use the Lug Kit.
④ Bus bar kits do not include lugs. Order C396CLUG if lugs are needed (3 lugs per kit).
⑤ The operator button is blue with the letters "RESET" printed in white. The push rod is 4.72" long and can be cut to the desired length. This kit can be used alone or in conjunction with the C396 Reset Bar Kit, C396ARST, to increase the size of the reset area on the overload.
⑥ Reset Bar Kit (C396ARST) required to use the Remote Reset modules. Note that all Freedom Starters come with Reset Bars.
⑦ Must be cut to proper length — uncut 4.72 inches (119.9 mm) long.
⑧ Enables a 22.5 mm operator to be mounted in a 30.5 mm holes — 1/16 to 7/32 inch (1.6 to 5.6 mm) panel thickness.

Technical Data . . . . . **Page 34-116**
Dimensions . . . . . **Pages 34-117, 34-118**
Discount Symbol **1CD7**

34

Technical Data and Specifications

Table 34-142. Overload Relay Specifications

General Description	C396_2_
	Standard
Protection	
Thermal	1.05 x FLA: Does not trip 1.25 x FLA: Overload trip
Phase Loss	1 Phase = 0, Trip time = 3s (Hot Status)
Phase Imbalance	Max - Min / Max > 40%, Trip time = 3s (Hot Status)
Inrush Current	> 8 x Max FLA, Trip time is 0.3s (Cold Status)
Trip Class	
Class 5, 10, 20, 30	Selectable
Reset	
M / M-O A / A-O	Manual / Manual + Stop Auto / Auto + Stop Auto Reset Time = 165s
Indications	
Test Indicator	Yellow
Trip Indicator	Yellow
PCBA	
Power Sensing	3 phase
Instant Reset by Power ON	CPU reset by Power ON after 2 – 3s
Thermal memory	< 3 min.
Cold and Hot Trip Curves	Power ON > 20 min. is Hot Status
Power Consumption	< 300 mW
Options	
Safety Cover	Covers FLA dial, DIP switches
Remote Reset	24V DC, 24V AC, 120V AC, 240V AC

Overload Relay Specifications (Continued)

General Description	C396_2_
	Standard
Climate Considerations	
Ambient Temperature (Operating)	-25° to 65°C (-13° to 149°F) inside enclosure
Ambient Temperature (Storage / Transportation)	-40° to 80°C (-40° to 176°F)
Humidity	UL991 (H3): 20 – 95% non-condensing
Altitude (Operating)	NEMA ICS1: 2000 meters max above sea level
Pollution (Operating — External)	Pollution degree 3
Mechanical Shock Resistance (IEC/EN 68-2-17)	15g
Vibration (Lloyd's Register of Shipping, Vibration Test 2)	6g
Temperature Compensation	Continuous
Voltages	
Control Voltage	12 – 690V AC, 50/60 Hz
Insulation Voltage (Ui) — Main Circuit	1000V AC
Insulation Voltage (Ui) — Control Circuit	690V AC
Impulse Withstand Voltage (Uimp) VAC	6000
FLA Range	
45 mm Frame: C396A_	0.1 – 45A
65 mm Frame: C396B_	15 – 110A
110 mm Frame: C396C_	30 – 150A
Safety	
Degree of Protection	IP20 (Stand-Alone Version Only)
Capacity	
Control Terminal Capacity	18 – 14 AWG
Control Terminal Tightening Torque in Nm (lb-in)	0.79 (7)
Load Terminal Capacity	
45 mm Frame: C396A_	14 – 6 AWG
65 mm Frame: C396B_	10 – 1 AWG
110 mm Frame: C396C_	6 AWG – 250 mcm
Load Terminal Tightening Torque in Nm (lb-in)	
45 mm Frame: C396A_	3.2 (28)
65 mm Frame: C396B_	9.0 (80)
110 mm Frame: C396C_	22.6 (200)

Dimensions . . . . . **Pages 34-117, 34-118**

Dimensions

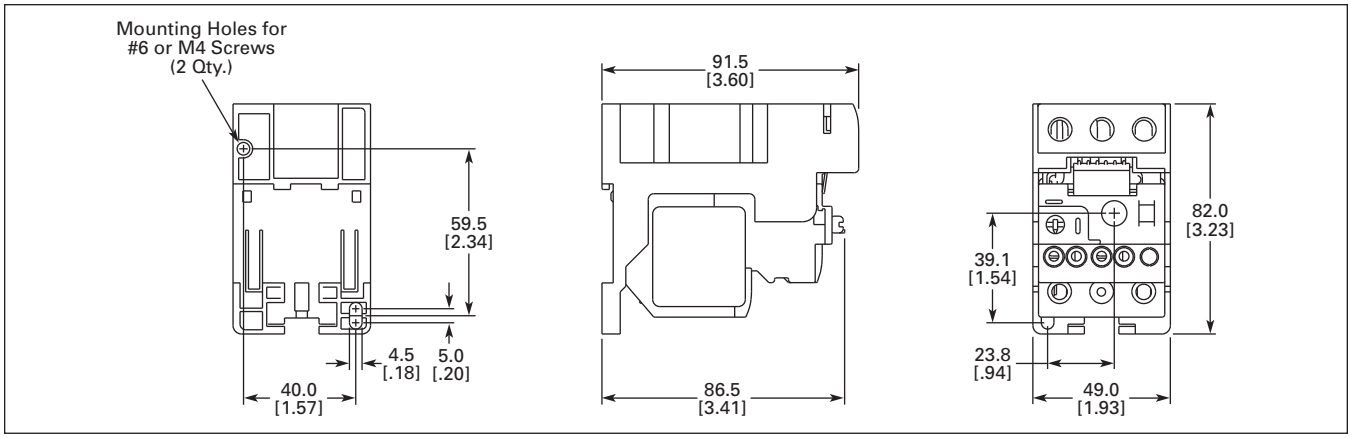

Figure 34-90. 45 mm Stand-Alone C396 Electronic Overload Relay — Approximate Dimensions in mm [in]

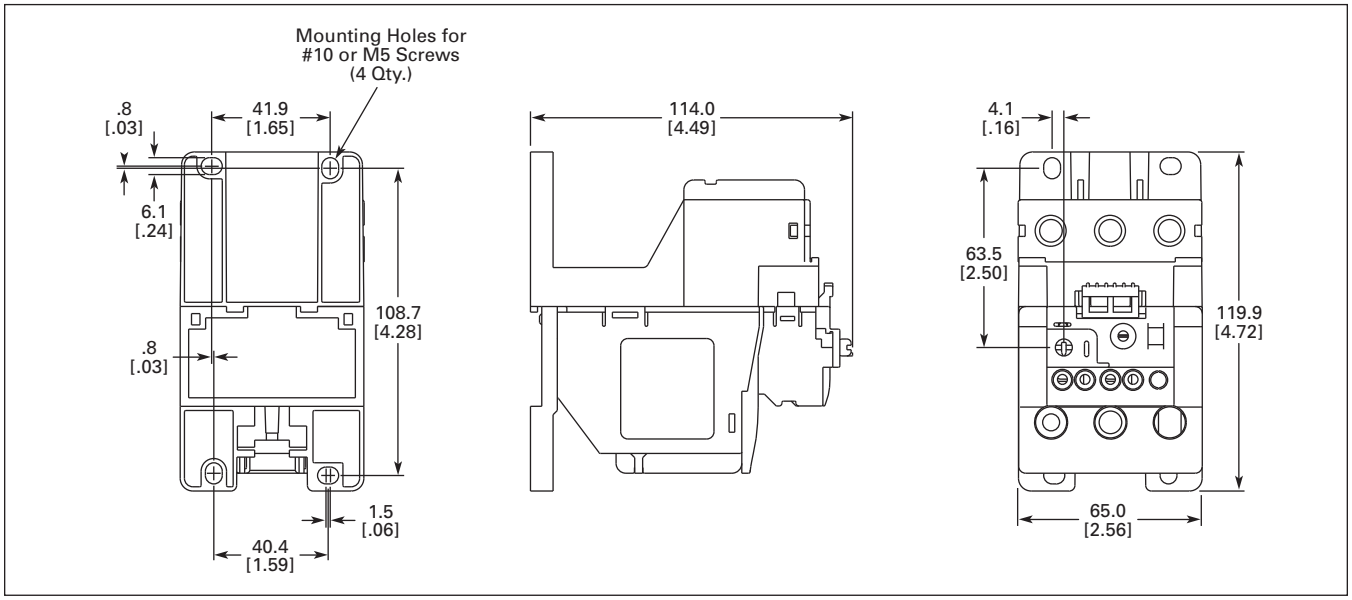

Figure 34-91. 65 mm Stand-Alone C396 Electronic Overload Relay — Approximate Dimensions in mm [in]

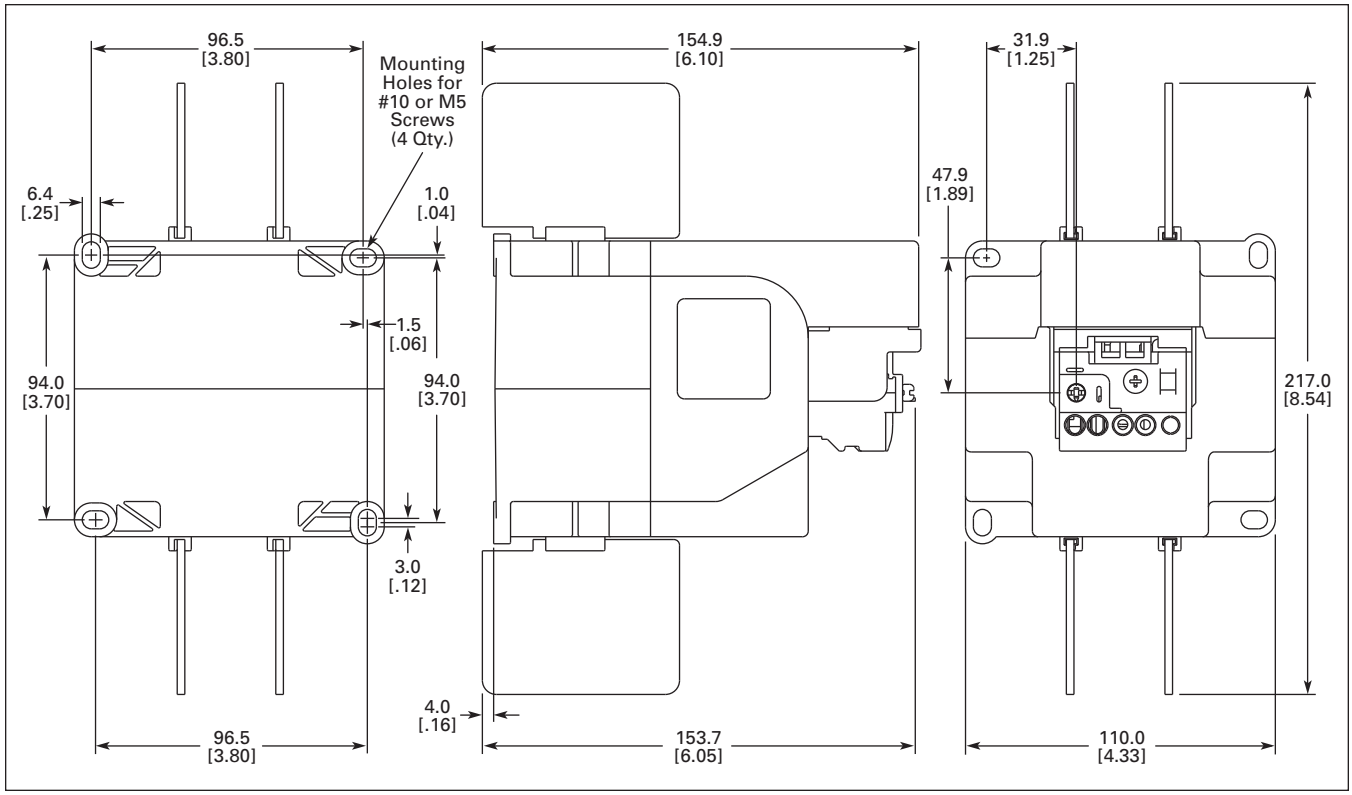

Figure 34-92. 110 mm Stand-Alone C396 Electronic Overload Relay — Approximate Dimensions in mm [in]

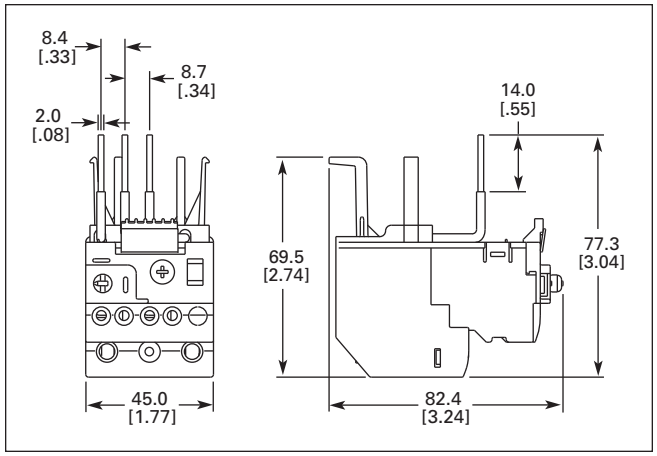

Figure 34-93. 45 mm C396 (0.1 – 8A) Direct Connect to *XT* Frame B Contactor — Approximate Dimensions in mm [in]

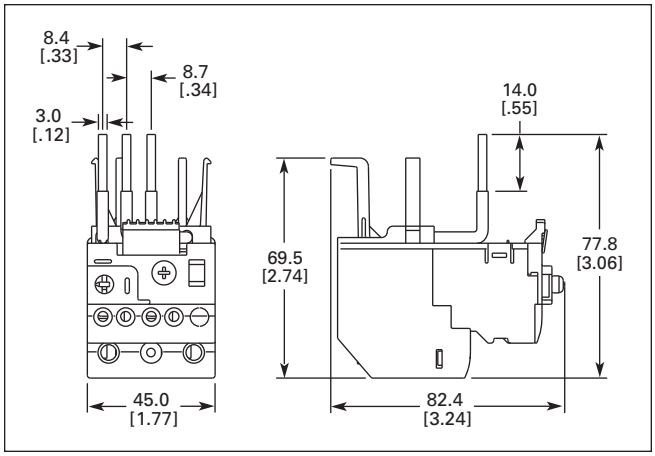

Figure 34-94. 45 mm C396 (6.4 – 32A) Direct Connect to *XT* Frame B Contactor — Approximate Dimensions in mm [in]

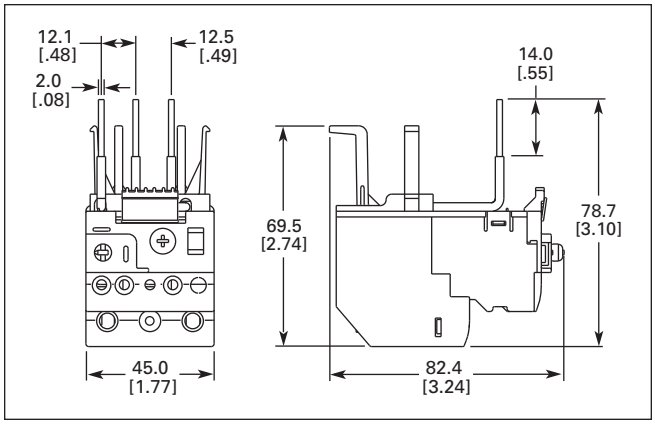

Figure 34-95. 45 mm C396 (0.1 – 8A) Direct Connect to *XT* Frame C Contactor — Approximate Dimensions in mm [in]

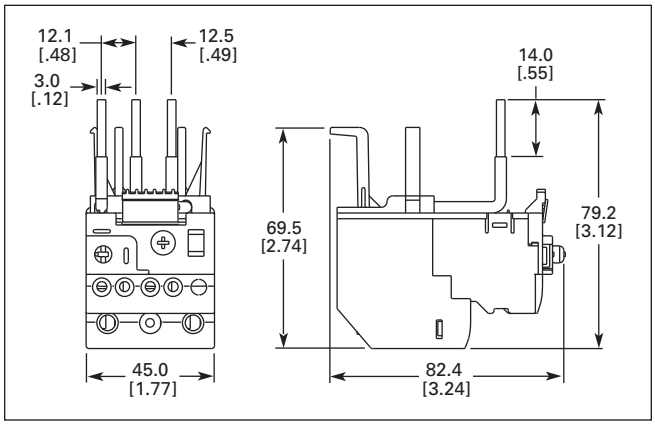

Figure 34-96. 45 mm C396 (6.4 – 32A) Direct Connect to *XT* Frame C Contactor — Approximate Dimensions in mm [in]

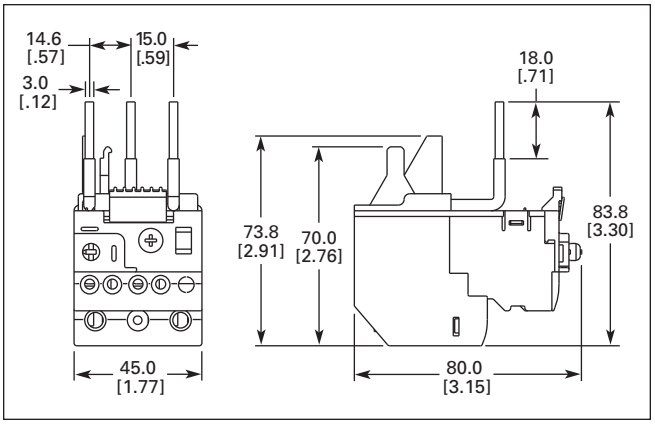

Figure 34-97. 45 mm C396 (6.4 – 45A) Direct Connect to *XT* Frame D Contactor — Approximate Dimensions in mm [in]

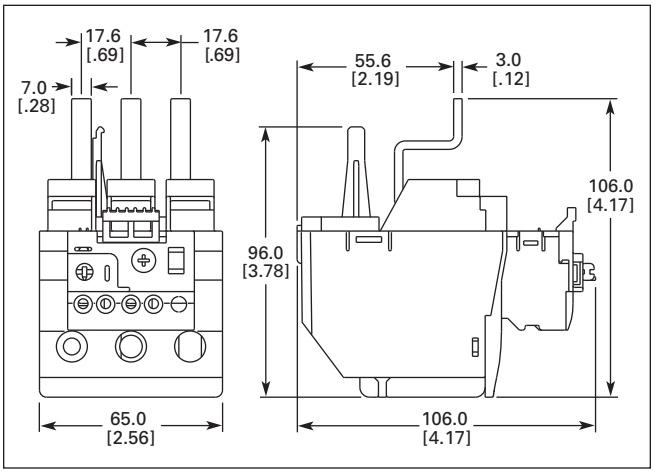

Figure 34-98. 65 mm C396 (15 – 75A) Direct Connect to *XT* Frame D Contactor — Approximate Dimensions in mm [in]

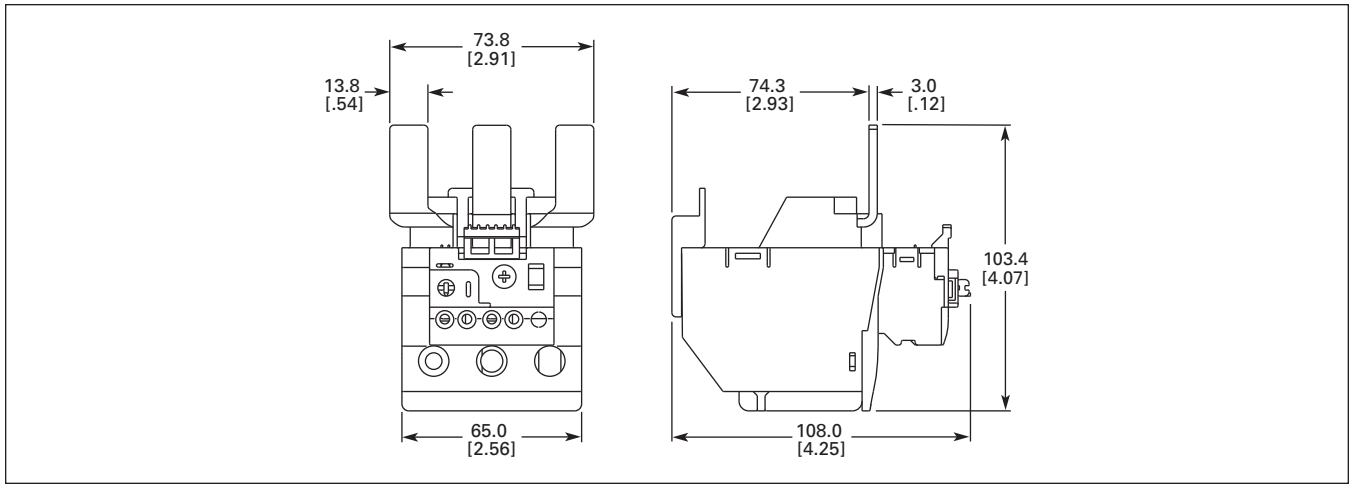

Figure 34-99. 65 mm C396 (22 – 110A) Direct Connect to *XT* Frame F – G Contactor — Approximate Dimensions in mm [in]

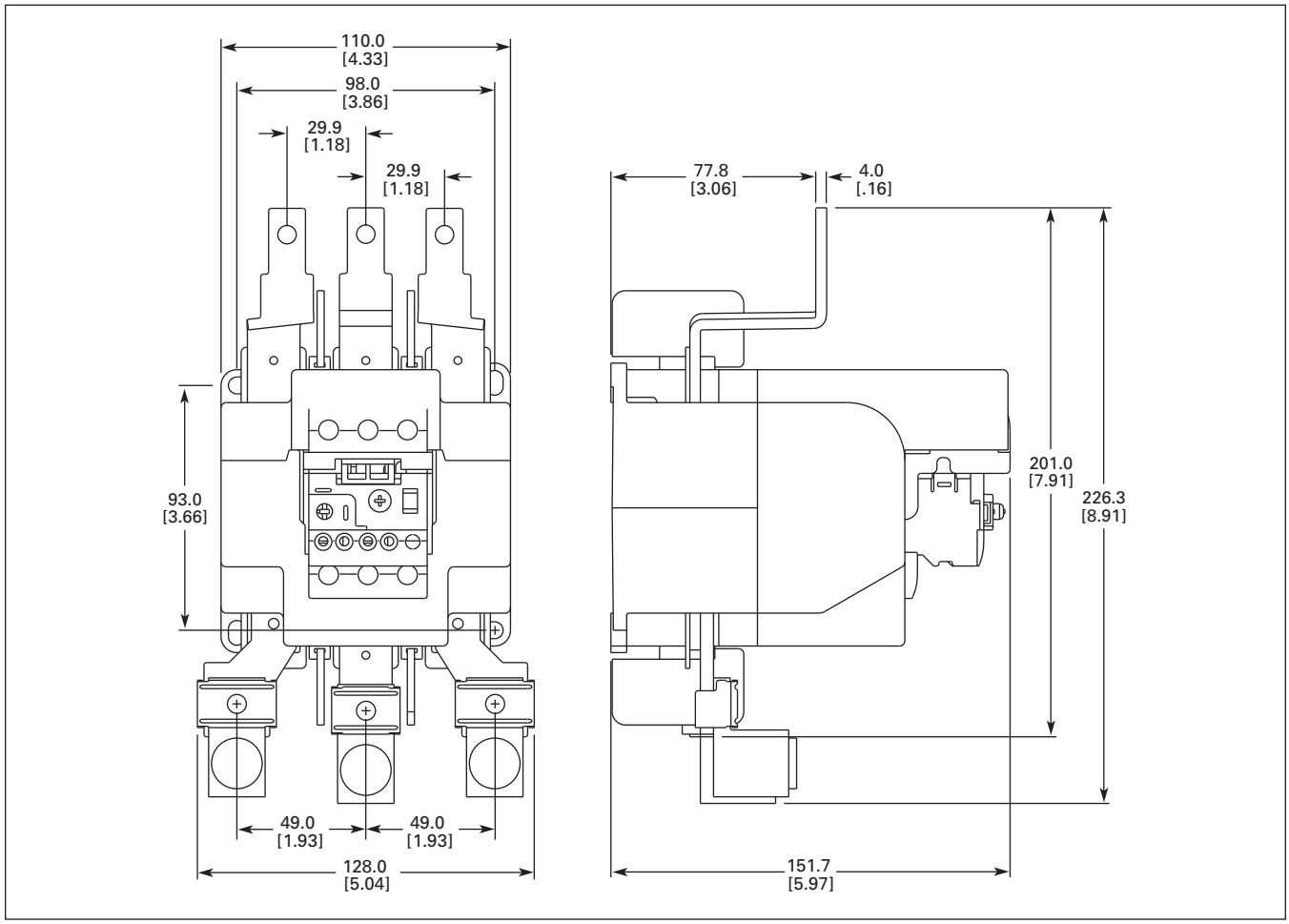

Figure 34-100. 110 mm C396 (30 – 150A) + C396CBARXT Direct Connect to *XT* Frame G Contactor — Approximate Dimensions in mm [in]

Contents

Description	*Page*
Catalog Number Selection	34-124
Product Selection	34-125
Accessories	34-130
Technical Data and Specifications	34-142
Dimensions	34-150
Reference Data	34-210

Pushbutton



B-Frame

Rotary

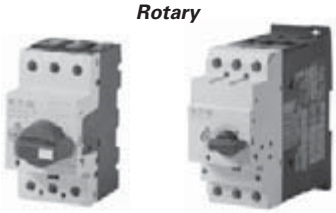

B-Frame ***D-Frame***

Product Description

Eaton's new ***XT*** family of Manual Motor Protectors (MMPs) features a pushbutton or rotary ON/OFF manual disconnect, Class 10 adjustable bimetallic overload relay and fixed magnetic short circuit trip capability in one compact unit. Two frame sizes are available: Frame B (45 mm) for motors with FLA ratings up to 32A and Frame D (55 mm) covers motor FLA ratings up to 63A.

Application Description

The XTPB and XTPR MMPs can be used in the following applications.

Motor Protective Circuit Breaker

In many countries outside of the United States and Canada, especially Europe, the MMPs are tested and classified as thermal magnetic circuit breakers for use in motor branch circuits. This can be an important consideration for all companies who export their equipment and machines internationally. Both the XTPB and XTPR conform to IEC/EN 60947 and have the CE Mark.

Manual Motor Protectors

The XTPB and XTPR MMPs are UL Listed under UL 508 as Manual Motor Protectors. They provide an economical solution for applications requiring simple manual starting and stopping of motors. When used as an MMP, they are typically installed in an enclosure. Many enclosures are offered as accessories for the MMPs. Separate short-circuit protective devices, such as circuit breakers or fuses, are wired ahead of the MMPs. The short-circuit protective device should be sized per the NEC code and should not exceed 400% of the maximum FLA dial setting of the MMP.

Group Motor Installations

A Group Motor Installation can be defined as more than one motor circuit protected by a single set of fuses or circuit breaker on a motor branch circuit. This eliminates the need for individual fuses or circuit breakers for each motor circuit. Substantial component cost savings, panel space savings and reduced wiring installation time can be achieved in Group Motor Installations.

The MMPs are tested and listed for group installation. If remote operation is required, a magnetic contactor can be wired in series with the MMP. See **Figure 34-101**.

Article 430.53 of the National Electric Code contains the rules and requirements for Group Motor Installations. Refer to Application Note AP03402001E for NEC requirement for group motor installation.

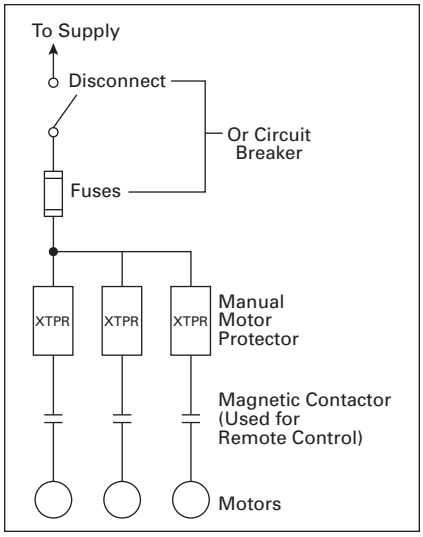

Figure 34-101. Group Motor Installation NEC 430-53

See Application Note — AP03402001E.

Protection in Different Controller Types

A UL 508 Type E Self-protected Manual Combination Starter/Motor Controller consists of a single device having integral short circuit protection, a main set of contacts, motor overload protection, and may also include a UL listed Line Side Adapter (see **Figure 34-102**). This type of controller is a legitimate short circuit protective device and disconnect means for the downstream motor. It does require an upstream feeder short circuit protective device, but does not require a dedicated branch circuit protection or a disconnect means. A UL 508 Type E rating means that the unit clears a fault and does not experience any welding of the power poles. A UL 508 Type E self-protected manual combination starter will remain fully functional should a short circuit within its ratings occur.

A UL 508 Type F Self-protected Combination Motor Controller consists of a UL 508 Listed Type E Self-protected Manual Combination Starter/Motor Controller, a UL Listed Contactor, and possibly a UL Listed Line Side Adapter. While the Type E self-protected manual motor controller of this combination motor controller device is a legitimate short circuit protective device and disconnect means for the downstream motor, the contactor is *not* "self-protected." *E.g.* XTCE007 – XTCE065.

In addition, as a complete assembly or modular components, the device should have Type 2 Coordination certification. Type 2 Coordination means the Starter or the Controller must exhibit little or no damage following a major short circuit fault and should be able to be returned to proper service without replacing any parts.

Component in a Combination Motor Controller

The XTPB and XTPR MMPs can also be wired in series with a magnetic contactor to complete the assembly of a remotely operated, combination motor controller.

Features

- ON/OFF Rotary Handle with Lockout Provision
- Visible Trip Indication
- Class 10 Overload Protection
- Phase Loss Sensitivity
- Ambient Temperature Compensation to IEC/EN 60947, VDE 0660
- Fixed Short Circuit Trip — 14 times maximum setting of overload FLA dial
- Type 2 Coordination per IEC 947
- Identification Markers Standard on Starter Faceplate
- Motor Applications from 0.1A to 63A
- Built-in heater and magnetic trip elements to protect the motor
- Adjustment dial for setting motor FLA
- DIN Rail Mount
- Terminal Types Available:
  - Screw terminals
  - Screw (line) and Spring Cage (load) terminals
  - Spring Cage terminals
- Accessories include:
  - Front and Side Auxiliary Contacts
  - Trip Indicating Contacts
  - Tamperproof Cover for OLR Dial
  - Undervoltage Release
  - Shunt Trip
  - Thru-the-Door Operators
  - Enclosures
  - 3-Phase Line Side Connecting Links

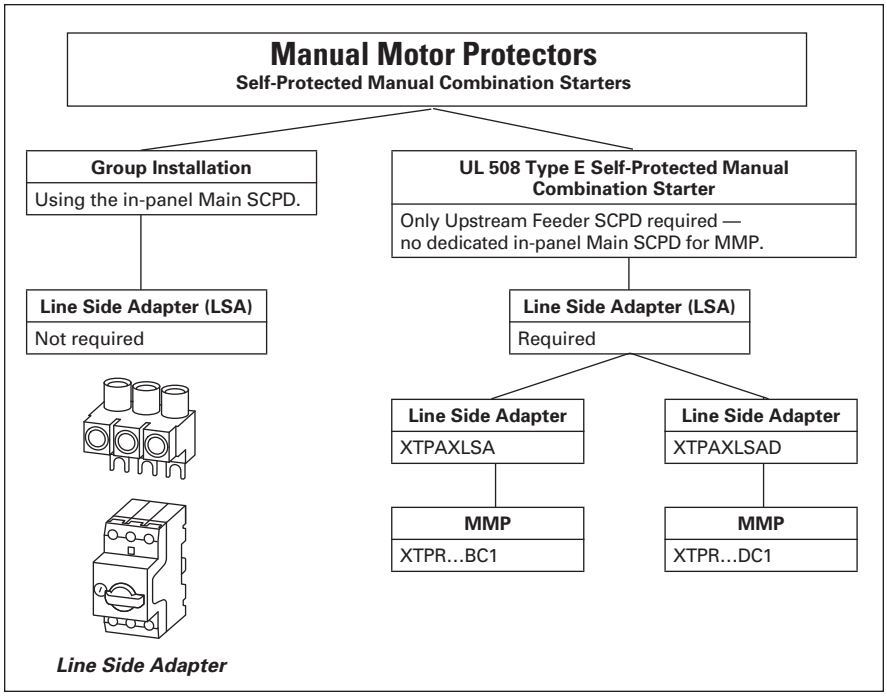

Figure 34-102. Line Side Adapters — When to Use Them
Note: Line Side Adapters are not required for non-US applications. Most countries outside of the US classify the MMP as a thermal magnetic circuit breaker.

Standards and Certifications

- UL Listed File No. E245398
- UL 508 Group Motor and Type E Compliant
- IEC/EN 60947
- CSA File 229767, Class 3211-05
- DIN VDE 0660 Part 100, Part 101 and Part 102
- CCC

Note: For Type 2 Coordination of MMCs, see **Tables 34-249** through **34-260** on **Pages 34-210** through **34-215**.

Types (Configurations)

- Motor Protective Device with Thermal and Magnetic Trip
  - XTPB Pushbutton Actuated Manual Motor Protector up to 25A
  - XTPR Rotary Actuated Manual Motor Protector up to 63A
- For the Protection of Transformers with a high inrush current:
  - XTPT Manual Transformer Protector up to 25A — not UL Approved
- Motor Protective Device without Overload Function:
  - XTPM Motor Protective Circuit Breaker up to 32A — not UL Approved

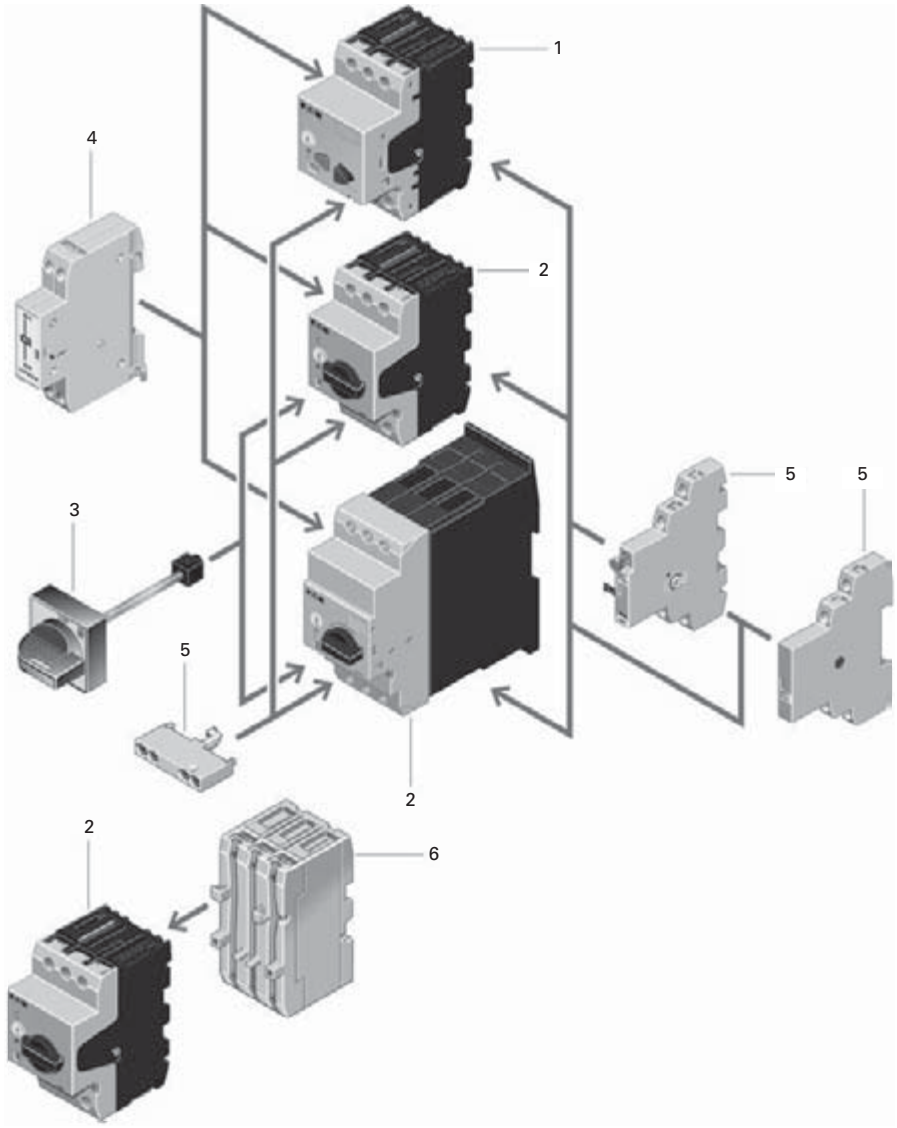

Table 34-143. Product Identification

No.	Description	Page
Basic Units		
1	XTPB Pushbutton Manual Motor Protectors: ■ Rated operational current up to 25A ■ Switching capacity 50 kA/415V ■ Short circuit release, fixed setting to 14 x I_u ■ Overload release, adjustable 0.6 — 1 x I_u ■ Single-phasing sensitive	**34-125**
2	XTPR Rotary Manual Motor Protectors: ■ Rated operational current up to 32A, 65A ■ Switching capacity 150/50 kA/ 415V ■ Short circuit release, fixed setting to 14 x I_u ■ Overload release, adjustable 0.6 — 1 x I_u ■ Single-phasing sensitive ■ With screws or spring-loaded terminals	**34-126**
Mounting Accessories		
3	Rotary Handle Mechanism: ■ ON/OFF/Tripped switch position indication ■ Lockable with 3 padlocks ■ Integrated door/cover interlock ■ Extendable by plug fit extension shaft ■ Handle latched in switch positions ■ Optionally also without locking and door interlock function	**34-133**
	Insulated Enclosures: ■ Surface mounting enclosures, IP40, IP55 and IP40 and IP55 front flush mounting enclosure	**34-138**
	Mounting/Wiring: ■ Component adapter for busbar mounting ■ Three-phase commoning link for side-by-side mounting ■ Mounting kits for rapid mounting of direct-on-line, reversing and star-delta starters	**34-134**
Add-On Functions		
4	Voltage Releases: ■ Undervoltage release ■ Shunt release ■ With screws or spring-loaded terminals	**34-132**
5	Standard Auxiliary Contacts: ■ ON/OFF indication ■ Differential fault indication overload/short circuit release ■ ON/OFF for (high capacity) contact module ■ ON/OFF for starter combination ■ With early-make contacts ■ With screws or spring-loaded terminals	**34-130**
6	Current Limiter: ■ Increases the switching capacity of the 10 – 25A Manual Motor Protectors to 100 kA/440V ■ Can be used for individual group protection	**34-132**



XTPB
B-Frame



XTPR, XTPM and XTPT
B-Frame



XTPR
D-Frame

Catalog Number Selection

Table 34-144. XT— Catalog Numbering System

XT PR 012 B C1

Designation
XT = ***XT*** IEC Power Control

Type
PB = Manual Motor Protector — Pushbutton
PR = Manual Motor Protector — Rotary
PM = Manual Motor Protector — Magnetic Only
PT = Manual Transformer Protector (High Mag.)

Trip Class
C1 = Class 10
Blank = Magnetic only (No thermal trip)

Frame Size	
B = 45 mm	**D** = 55 mm

Current Ratings	
B Frame	
P16 = 0.16A	**6P3** = 6.3A
P25 = 0.25A	**010** = 10A
P40 = 0.40A	**012** = 12A
P63 = 0.63A	**016** = 16A
001 = 1A	**020** = 20A
1P6 = 1.6A	**025** = 25A
2P5 = 2.5A	**032** = 32A
004 = 4A	
D Frame	
016 = 16A	**050** = 50A
025 = 25A	**058** = 58A
032 = 32A	**063** = 63A
040 = 40A	

Product Selection

Product Selection for Manual Motor Starter Applications

When ordering, specify Catalog Numbers according to the following stipulations:

XT Manual Motor Protectors are selected based on the overload current range required for a given motor. This current range is determined from the motor Full Load Ampere rating and Motor Service Factor usually found on the motor nameplate.

For motors with service factors less than 1.15, multiply the motor FLA by .90 to select appropriate MMP.

Example: For motor having FLA of 6.4A and service factor of 1.0 (6.4A x .90 = 5.76A) select Catalog Number XTPB6P3B01.

See Application Note — AP03402001E.

For motor with service factor of 1.15 or greater, use motor nameplate Full Load Amperes to select the appropriate MMP.

Example: For motor having FLA of 11A and service factor of 1.15, select Catalog Number XTPR012BC1.



B-Frame

Table 34-145. XTPB Pushbutton Manual Motor Protectors — Global and North American Ratings
Type 1 and Type 2 Coordination
Motor Protective Device with Thermal and Magnetic Trip

Rated Uninterrupted Current — $I_u = I_e$ (Amps)	FLA Adjustment Range / Overload Release — I_r (Amps)	Short Circuit Release — I_{rm} (Amps)	Maximum Motor Ratings ①									Screw Terminals	
			Maximum kW Rating AC-3 — P (kW)					Maximum hp Rating — P (hp) UL 508/CSA C 22.2 No. 14				Catalog Number	Price U.S. $
			3-Phase					3-Phase					
			220 – 240V	380 – 415V	440V	500V	660 – 690V	200V	240V	480V	600V		
Frame B													
0.16	0.1 – 0.16	2.2	—	—	—	—	0.06	②	②	②	②	**XTPBP16BC1**	
0.25	0.16 – 0.25	3.5	—	0.06	0.06	0.06	0.12	②	②	②	②	**XTPBP25BC1**	
0.4	0.25 – 0.4	5.6	0.06	0.09	0.12	0.12	0.18	②	②	②	②	**XTPBP40BC1**	
0.63	0.4 – 0.63	8.8	0.09	0.12	0.18	0.25	0.25	②	②	②	②	**XTPBP63BC1**	
1	0.63 – 1	14	0.12	0.25	0.25	0.37	0.55	②	②	1/2	1/2	**XTPB001BC1**	
1.6	1 – 1.6	22	0.25	0.55	0.55	0.75	1.1	②	②	3/4	1	**XTPB1P6BC1**	
2.5	1.6 – 2.5	35	0.37	0.75	1.1	1.1	1.5	1/2	1/2	1	1-1/2	**XTPB2P5BC1**	
4	2.5 – 4	56	0.75	1.5	1.5	2.2	3	1	1	2	3	**XTPB004BC1**	
6.3	4 – 6.3	88	1.1	2.2	3	3	4	1-1/2	1-1/2	3	5	**XTPB6P3BC1**	
10	6.3 – 10	140	2.2	4	4	4	7.5	3	3	7-1/2	10	**XTPB010BC1**	
12	8 – 12	168	3	5.5	5.5	5.5	11	3	3	7-1/2	10	**XTPB012BC1**	
16	10 – 16	224	4	7.5	9	9	12.5	3	5	10	10	**XTPB016BC1**	
20	16 – 20	280	5.5	9	11	12.5	15	5	5	10	15	**XTPB020BC1**	
25	20 – 25	350	5.5	12.5	12.5	15	22	5	7-1/2	15	20	**XTPB025BC1**	

① Select Manual Motor Protectors by full load amperes. Maximum Motor Ratings (kW, hp) are for reference only.
② In this range, calculate motor rating according to rated current. Specified values to NEC 430.6(A)(1).

Notes:

Single-phasing sensitivity to IEC/EN 60947-4-1, VDE 0660 Part 102.
Can be snap-fit to IEC/EN 60715 top-hat (DIN) with 7.5 or 15 mm height.
Service Factor (SF) — Setting I_r of current scale in dependence of load factor:
SF = 1.15 -> $I_r = 1 \times I_{n\ mot}$
SF = 1 -> $I_r = 0.9 \times I_{n\ mot}$

For manual motor protective circuit breaker switching capacity, see **Page 34-147**.

Technical Data ..... **Page 34-142**
Discount Symbol **1CD7**



B-Frame



D-Frame

Table 34-146. XTPR Rotary Manual Motor Protectors with Screw Terminals — Global Ratings and North American Ratings
Type 1 and Type 2 Coordination
Motor Protective Device with Thermal and Magnetic Trip

Rated Uninterrupted Current — $I_u = I_e$ (Amps)	FLA Adjustment Range / Overload Release — I_r (Amps)	Short Circuit Release — I_{rm} (Amps)	Maximum Motor Ratings ①									Screw Terminals ③	
			Maximum kW Rating AC-3 — P (kW)					Maximum hp Rating — P (hp) UL 508/CSA C 22.2 No. 14				Catalog Number	Price U.S. $
			3-Phase					3-Phase					
			220 – 240V	380 – 415V	440V	500V	660 – 690V	200V	240V	480V	600V		
Frame B													
0.16	0.1 – 0.16	2.2	—	—	—	—	0.06	②	②	②	②	**XTPRP16BC1**	
0.25	0.16 – 0.25	3.5	—	0.06	0.06	0.06	0.12	②	②	②	②	**XTPRP25BC1**	
0.4	0.25 – 0.4	5.6	0.06	0.09	0.12	0.12	0.18	②	②	②	②	**XTPRP40BC1**	
0.63	0.4 – 0.63	8.8	0.09	0.12	0.18	0.25	0.25	②	②	②	②	**XTPRP63BC1**	
1	0.63 – 1	14	0.12	0.25	0.25	0.37	0.55	②	②	1/2	1/2	**XTPR001BC1**	
1.6	1 – 1.6	22	0.25	0.55	0.55	0.75	1.1	②	②	3/4	1	**XTPR1P6BC1**	
2.5	1.6 – 2.5	35	0.37	0.75	1.1	1.1	1.5	1/2	1/2	1	1-1/2	**XTPR2P5BC1**	
4	2.5 – 4	56	0.75	1.5	1.5	2.2	3	1	1	2	3	**XTPR004BC1**	
6.3	4 – 6.3	88	1.1	2.2	3	3	4	1-1/2	1-1/2	3	5	**XTPR6P3BC1**	
10	6.3 – 10	140	2.2	4	4	4	7.5	3	3	7-1/2	10	**XTPR010BC1**	
12	8 – 12	168	3	5.5	5.5	5.5	11	3	3	7-1/2	10	**XTPR012BC1**	
16	10 – 16	224	4	7.5	9	9	12.5	3	5	10	10	**XTPR016BC1**	
20	16 – 20	280	5.5	9	11	12.5	15	5	5	10	15	**XTPR020BC1**	
25	20 – 25	350	5.5	12.5	12.5	15	22	5	7-1/2	15	20	**XTPR025BC1**	
32	25 – 32	448	7.5	15	15	22	30	7-1/2	10	25	30	**XTPR032BC1**	
Frame D													
16	10 – 16	224	4	7.5	9	9	12.5	3	5	10	15	**XTPR016DC1**	
25	16 – 25	350	5.5	12.5	12.5	15	22	7-1/2	7-1/2	20	25	**XTPR025DC1**	
32	25 – 32	448	7.5	15	17.5	22	22	10	10	25	30	**XTPR032DC1**	
40	32 – 40	560	11	20	22	24	30	10	15	30	40	**XTPR040DC1**	
50	40 – 50	700	14	25	30	30	45	10	15	30	40	**XTPR050DC1**	
58	50 – 58	812	17	30	37	37	55	—	—	40	—	**XTPR058DC1**	
65	55 – 65	882	18.5	34	37	45	55	—	—	—	—	**XTPR063DC1**	

① Select Manual Motor Protectors by full load amperes. Maximum Motor Ratings (kW, hp) are for reference only.

② In this range, calculate motor rating according to rated current. Specified values to NEC 430.6(A)(1).

③ Catalog number shown comes with screw terminals. For Frame B devices up to 16A, spring cage terminals are available. For spring cage terminals on line and load sides, insert a "C" into the catalog number in the 5th position — Example: XTPR**C**_BC1. For spring cage terminals on the load side only, insert an "SC" into the catalog number in the 5th and 6th positions — Example: XTPR**SC**_BC1.

Notes:

Single-phasing sensitivity to IEC/EN 60947-4-1, VDE 0660 Part 102.
Can be snap-fit to IEC/EN 60715 top-hat (DIN) with 7.5 or 15 mm height.
Service Factor (SF) — Setting I_r of current scale in dependence of load factor:
SF = 1.15 -> $I_r = 1 \times I_{n\ mot}$
SF = 1 -> $I_r = 0.9 \times I_{n\ mot}$

For manual motor protective circuit breaker switching capacity, see **Page 34-147**.

Technical Data . . . . . **Page 34-142**
Discount Symbol **1CD7**



B-Frame



D-Frame

Table 34-147. XTPR Manual Self-Protected Motor Starters — North American Ratings, UL 508 Type E ①
Motor Protective Device with Thermal and Magnetic Trip

Rated Uninterrupted Current — I_u (Amps)	FLA Adjustment Range / Overload Release — I_r (Amps)	Short Circuit Release — I_{rm} (Amps)	Maximum Motor Ratings ②				Rated Short-Circuit Breaking Capacity (kA)			Line Side Adapter ①	Price U.S. $	Manual Motor Protector — Screw Terminals	Price U.S. $
			Maximum hp Rating — P (hp)				240V	480/ 277V	600/ 347V				
			3-Phase										
			200V	240V	480V/ 277V	600V/ 247V				Catalog Number		Catalog Number	
Frame B													
0.16	0.1 – 0.16	2.2	③	③	1/2	1/2	50	50	50	**XTPAXLSA**		**XTPRP16BC1**	
0.25	0.16 – 0.25	3.4	③	③	1/2	1/2	50	50	50	**XTPAXLSA**		**XTPRP25BC1**	
0.4	0.25 – 0.4	5.6	③	③	1/2	1/2	50	50	50	**XTPAXLSA**		**XTPRP40BC1**	
0.63	0.4 – 0.63	8.8	③	③	1/2	1/2	50	50	50	**XTPAXLSA**		**XTPRP63BC1**	
1	0.63 – 1	14	③	③	1/2	1/2	50	50	50	**XTPAXLSA**		**XTPR001BC1**	
1.6	1 – 1.6	22	③	③	3/4	3/4	50	50	50	**XTPAXLSA**		**XTPR1P6BC1**	
2.5	1.6 – 2.5	35	1/2	1/2	1	1-1/2	50	50	50	**XTPAXLSA**		**XTPR2P5BC1**	
4	2.5 – 4	56	3/4	1	2	3	50	50	50	**XTPAXLSA**		**XTPR004BC1**	
6.3	4 – 6.3	88	1	1-1/2	3	5	50	50	50	**XTPAXLSA**		**XTPR6P3BC1**	
10	6.3 – 11	140	3	3	7-1/2	10	50	50	50	**XTPAXLSA**		**XTPR010BC1**	
12	8 – 12	168	3	3	7-1/2	—	42	42	—	**XTPAXLSA**		**XTPR012BC1**	
16	10 – 16	224	3	5	10	—	42	42	—	**XTPAXLSA**		**XTPR016BC1**	
20	16 – 20	280	5	5	—	—	42	42	—	**XTPAXLSA**		**XTPR020BC1**	
25	20 – 25	350	5	7-1/2	15	—	18	18	—	**XTPAXLSA**		**XTPR025BC1**	
32	25 – 32	448	7-1/2	10	25	—	18	18	—	**XTPAXLSA**		**XTPR032BC1**	
Frame D													
16	10 – 16	224	3	5	10	10	50	50	50	**XTPAXLSAD**		**XTPR016DC1**	
25	16 – 25	350	7-1/2	7-1/2	20	25	50	50	50	**XTPAXLSAD**		**XTPR025DC1**	
32	25 – 32	448	10	10	25	30	50	50	50	**XTPAXLSAD**		**XTPR032DC1**	
40	32 – 40	560	10	10	30	40	50	50	50	**XTPAXLSAD**		**XTPR040DC1**	
50	40 – 50	700	10	15	30	—	65	65	—	**XTPAXLSAD**		**XTPR050DC1**	
58	50 – 58	812	15	15	40	—	65	65	—	**XTPAXLSAD**		**XTPR058DC1**	
65	55 – 65	882	15	15	40	—	65	65	—	**XTPAXLSAD**		**XTPR063DC1**	

① UL 508 Type E starters are assembled from a standard XTPR and a special incoming terminal Line Side Adapter (XTPAXLSA or XTPAXLSAD).
② Select Manual Motor Protectors by full load amperes. Maximum Motor Ratings (kW, hp) are for reference only.
③ In this range, calculate motor rating according to rated current. Specified values to NEC 430.6(A)(1).

Notes:
A UL 508 Type E Self-Protected Manual Combination Starter (XTPR) consists of a Manual Motor Protector (XTPR) and a UL Listed Line Side Adapter (e.g. XTPAXLSA). The Type E Self-Protected Manual Combination Starter alone is a legitimate short-circuit protective device and disconnect means for the down-stream motor, while the contactor has been added to provide remote operation of the motor circuit.

Accessories ..... **Page 34-130**
Technical Data ..... **Page 34-142**
Discount Symbol **1CD7**



B-Frame

Table 34-148. XTPT Transformer Protective Circuit Breakers — Global Ratings ①②

Type 1 and Type 2 Coordination

For the protection of transformers with a high inrush current. Fixed short-circuit trip of 15 – 22 times max. settings of FLA

Rated Uninterrupted Current — I_u (Amps)	FLA Adjustment Range / Overload Release — I_r (Amps)	Short Circuit Release — I_{rm} (Amps)	Maximum Motor Ratings									Screw Terminals	
			Maximum kW Rating AC-3 — P (kW)					Maximum hp Rating — P (hp)				Catalog Number	Price U.S. $
			3-Phase					3-Phase					
			220 – 240V	380 – 415V	440V	500V	660 – 690V	200V	240V	480V	600V		
Frame B													
0.16	0.1 – 0.16	2.4	—	—	—	—	—	—	—	—	—	**XTPTP16BC1**	
0.25	0.16 – 0.25	4.25	—	—	—	—	—	—	—	—	—	**XTPTP25BC1**	
0.4	0.25 – 0.4	6.8	—	—	—	—	—	—	—	—	—	**XTPTP40BC1**	
0.63	0.4 – 0.63	12	—	—	—	—	—	—	—	—	—	**XTPTP63BC1**	
1	0.63 – 1	20	—	—	—	—	—	—	—	—	—	**XTPT001BC1**	
1.6	1 – 1.6	32	—	—	—	—	—	—	—	—	—	**XTPT1P6BC1**	
2.5	1.6 – 2.5	50	—	—	—	—	—	—	—	—	—	**XTPT2P5BC1**	
4	2.5 – 4	84	—	—	—	—	—	—	—	—	—	**XTPT004BC1**	
6.3	4 – 6.3	141	—	—	—	—	—	—	—	—	—	**XTPT6P3BC1**	
10	6.3 – 10	224	—	—	—	—	—	—	—	—	—	**XTPT010BC1**	
12	8 – 12	224	—	—	—	—	—	—	—	—	—	**XTPT012BC1**	
16	10 – 16	358	—	—	—	—	—	—	—	—	—	**XTPT016BC1**	
20	16 – 20	380	—	—	—	—	—	—	—	—	—	**XTPT020BC1**	
25	20 – 25	420	—	—	—	—	—	—	—	—	—	**XTPT025BC1**	

① For manual motor protective circuit breaker switching capacity, see **Page 34-147**.

② XTPT is not UL/CSA approved.

Notes:

For the protection of transformers with a high inrush current.
Single-phasing sensitivity to IEC/EN 60947-4-1, VDE 0660 Part 102.
Can be snap-fit to IEC/EN 60715 top-hat (DIN) with 7.5 or 15 mm height.
Service Factor (SF) — Setting I_r of current scale in dependence of load factor:

SF = 1.15 -> $I_r = 1 \times I_{n\ mot}$
SF = 1 -> $I_r = 0.9 \times I_{n\ mot}$

Accessories ..... **Page 34-130**
Technical Data ..... **Page 34-142**
Discount Symbol **1CD7**



B-Frame

Table 34-149. XTPM Motor Protective Circuit Breakers for Starter Combinations — Global Ratings
Type 1 and Type 2 Coordination
Motor Protective Device without Overload Function

Rated Uninterrupted Current — I_u (Amps)	FLA Adjustment Range / Overload Release — I_r (Amps)	Short Circuit Release — I_{rm} (Amps)	Maximum Motor Ratings ①									Screw Terminals	
			Maximum kW Rating AC-3 — P (kW)					Maximum hp Rating — P (hp) ②				Catalog Number	Price U.S. $
			3-Phase					3-Phase					
			220 – 240V	380 – 415V	440V	500V	660 – 690V	200V	240V	480V	600V		
Frame B													
0.16	—	2.2	—	—	—	—	0.06	—	—	—	—	**XTPMP16B**	
0.25	—	3.5	—	0.06	0.06	0.06	0.12	—	—	—	—	**XTPMP25B**	
0.4	—	5.6	0.06	0.09	0.12	0.12	0.18	—	—	—	—	**XTPMP40B**	
0.63	—	8.8	0.09	0.12	0.18	0.25	0.25	—	—	—	—	**XTPMP63B**	
1	—	14	0.12	0.25	0.25	0.37	0.55	—	—	—	—	**XTPM001B**	
1.6	—	22	0.25	0.37	0.55	0.75	1.1	—	—	—	—	**XTPM1P6B**	
2.5	—	35	0.37	0.75	1.1	1.1	1.5	—	—	—	—	**XTPM2P5B**	
4	—	56	0.75	1.5	1.5	2.2	3	—	—	—	—	**XTPM004B**	
6.3	—	88	1.1	2.2	3	3	4	—	—	—	—	**XTPM6P3B**	
10	—	140	2.2	4	4	4	7.5	—	—	—	—	**XTPM010B**	
12	—	168	3	5.5	5.5	5.5	11	—	—	—	—	**XTPM012B**	
16	—	224	4	7.5	9	9	12.5	—	—	—	—	**XTPM016B**	
20	—	280	5.5	9	11	12.5	15	—	—	—	—	**XTPM020B**	
25	—	350	5.5	12.5	12.5	15	22	—	—	—	—	**XTPM025B**	
32	—	448	7.5	15	15	22	30	—	—	—	—	**XTPM032B**	

① Select Manual Motor Protectors by full load amperes. Maximum Motor Ratings (kW, hp) are for reference only.
② XTPM is not UL/CSA Approved.

Notes:
Can be snap-fit to IEC/EN 60715 top-hat rail with 7.5 or 15 mm height.
An appropriate overload relay must be fitted to protect motors against overload.
Combinations of the XTPM Manual Motor Protectors and XTCE/XTCR Contactors + XTOB Overload Relays can be found in the ***XT*** Manual and Combination Motor Controllers section.
When using the XTPM as short-circuit protection for motors with heavy starting duty, the rated operational current I_e must be derated during engineering with the following factors:

Class 5 = 1.0
Class 10 = 1.0
Class 15 = 0.82
Class 20 = 0.71
Class 25 = 0.63
Class 30 = 0.58
Class 35 = 0.53
Class 40 = 0.50

Accessories ..... **Page 34-130**
Technical Data ..... **Page 34-142**
Discount Symbol **1CD7**

Accessories

Auxiliary Contacts

Side-Mount Auxiliary Contacts



Can be fitted on the right side of manual motor protectors (XTPB, XTPR, XTPM) and manual transformer protectors (XTPT) and can be combined with XTPAXSATR... and XTPAXFA... trip indicating auxiliary contact.

Table 34-150. Side-Mount Auxiliary Contacts

Contact Configuration	Contact Sequence	Screw Terminals		Spring Cage Terminals		Price U.S. $ ①
		Pkg. Qty.	Catalog Number	Pkg. Qty.	Catalog Number	
1NO-1NC	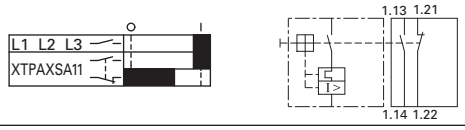	5	**XTPAXSA11**	5	**XTPAXSAC11**	
1NO-2NC	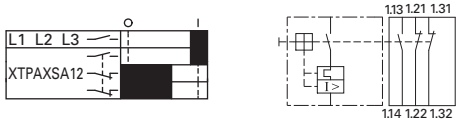	5	**XTPAXSA12**	—	**—**	
2NO-1NC	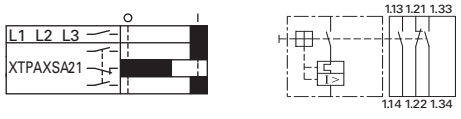	5	**XTPAXSA21**	—	**—**	

① Orders must be placed in multiples of package quantity listed.

Front-Mount Auxiliary Contacts



Can be fitted to manual motor protectors (XTPB, XTPR, XTPM) and manual transformer protectors (XTPT). 45 mm (XTPR...B and XTPB) or 55 mm (XTPR...D) widths of manual motor protectors remain unchanged.

Table 34-151. Front-Mount Auxiliary Contacts

Contact Configuration	Contact Sequence	Screw Terminals		Spring Cage Terminals		Price U.S. $ ②
		Pkg. Qty.	Catalog Number	Pkg. Qty.	Catalog Number	
1NO-1NC	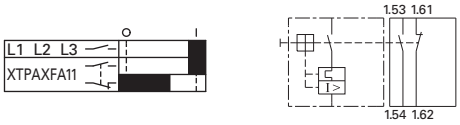	5	**XTPAXFA11**	—	**—**	
1NO-0NC	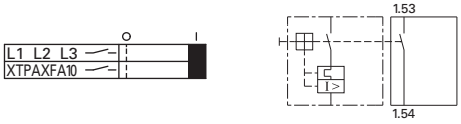	5	**XTPAXFA10**	5	**XTPAXFAC10**	
0NO-1NC	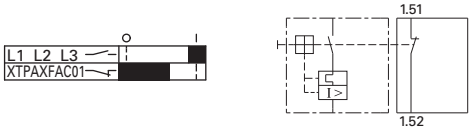	—	**—**	5	**XTPAXFAC01**	

② Orders must be placed in multiples of package quantity listed.

Discount Symbol **1CD7**

34

Side-Mount Trip Indicating Auxiliary Contacts



Can be fitted on the right side of manual motor protectors. Can be combined with standard auxiliary contacts. Trip indication: A. General Trip indication (overload) B. Short-circuit trip. Local short-circuit indication by red indicator, manually resettable.

Table 34-152. Side-Mount Trip Indicating Auxiliary Contacts

Contact Configuration	Contact Sequence	Pkg. Qty.	For Use with…	Catalog Number	Price U.S. $ ①
2 x 1NO	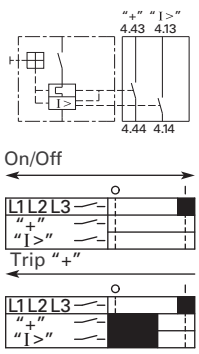	2	XTPB, XTPR, XTPM, XTPT	**XTPAXSATR20**	
2 x 1NC	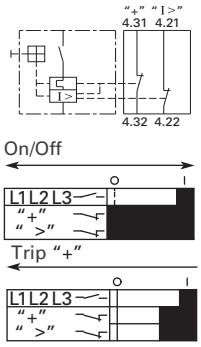	2	XTPB, XTPR, XTPM, XTPT	**XTPAXSATR02**	

① Orders must be placed in multiples of package quantity listed.

Early-Make Front-Mount Auxiliary Contacts



XTPBXFAEM20



XTPAXFAEM20

For use with XTPB..., B-Frame XTPR and XTPT. Can be fitted to the front of a manual motor protector. 45 mm width of manual motor protector remains unchanged. For early energization of undervoltage release, e.g. in Emergency-Stop circuits to EN 60204.

Table 34-153. Early-Make Front-Mount Auxiliary Contacts

Contact Configuration	Contact Sequence	Pkg. Qty.	For Use with…	Catalog Number	Price U.S. $ ②
2NO	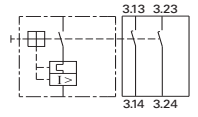	5	XTPB	**XTPBXFAEM20**	
2NO		2	XTPR, XTPM, XTPT	**XTPAXFAEM20** ③	

② Orders must be placed in multiples of package quantity listed.
③ Not for use with rotary handle mechanism

Discount Symbol **1CD7**

34

Shunt Release



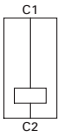

Contact Sequence

Can be used to trip the manual motor protector from a remote location. Can be fitted on the left side of manual motor protectors. Cannot be combined with the XTPAXUVR. DC: Intermittent operation 5 sec.

Table 34-154. Shunt Release

Catalog Number — Screw Terminals	Catalog Number — Spring Cage Terminals	Pkg. Qty.	Price U.S. $ ①
XTPAXSR24V50H	—	2	
XTPAXSR48V50H	—	2	
XTPAXSR110V50H	—	2	
XTPAXSR120V60H	—	2	
XTPAXSR208V60H	—	2	
XTPAXSR220V50H	—	2	
XTPAXSR230V50H	XTPAXSRC230V50H	2	
XTPAXSR240V50H	—	2	
XTPAXSR240V60H	—	2	
XTPAXSR380V50H	—	2	
XTPAXSR400V50H	—	2	
XTPAXSR415V50H	—	2	
XTPAXSR440V60H	—	2	
XTPAXSR480V60H	—	2	
XTPAXSR24VDC	XTPAXSRC24VDC	2	
XTPAXSR48VDC	—	2	
XTPAXSR60VDC	—	2	
XTPAXSR110VDC	—	2	
XTPAXSR125VDC	—	2	
XTPAXSR220VDC	—	2	
XTPAXSR250VDC	—	2	

① Orders must be placed in multiples of package quantity listed.

Undervoltage Release



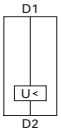

Contact Sequence

Can be used to trip the manual motor protector from a remote location. Can be fitted on left side manual motor protectors. Cannot be combined with XTPAXSR. When combined with a circuit breaker, it can be used as Emergency-Stop device to IEC/EN 60204.

Table 34-155. Undervoltage Release

Catalog Number — Screw Terminals	Catalog Number — Spring Cage Terminals	Pkg. Qty.	Price U.S. $ ②
XTPAXUVR24V50H	—	2	
XTPAXUVR24V60H	—	2	
XTPAXUVR48V50H	—	2	
XTPAXUVR60V50H	—	2	
XTPAXUVR110V50H	—	2	
XTPAXUVR120V60H	—	2	
XTPAXUVR208V60H	—	2	
XTPAXUVR220V50H	—	2	
XTPAXUVR230V50H	XTPAXUVRC230V50H	2	
XTPAXUVR240V50H	—	2	
XTPAXUVR240V60H	—	2	
XTPAXUVR380V50H	—	2	
XTPAXUVR400V50H	—	2	
XTPAXUVR415V50H	—	2	
XTPAXUVR440V60H	—	2	
XTPAXUVR480V60H	—	2	
XTPAXUVR600V60H	—	2	

② Orders must be placed in multiples of package quantity listed.

Current Limiter ③



The XTPAXCL enhances the switching capacity of the XT manual motor protectors. It can be used with the XTPB, XTPR...BC1, XTPR...DC1 for individual or group protections. The rated uninterrupted current is 63A for IEC and 25A for UL/CSA. It can be mounted next to or behind the manual motor protector. See **Tables 34-184** and **34-185** for ratings when using the current limiter.

Table 34-156. Current Limiter

Description	Contact Sequence	Pkg. Qty.	Catalog Number	Price U.S. $
To enhance the switching capacity of non-inherently safe 10 – 25A Manual Motor Protectors to 150 kA/ 440V	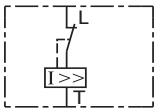	1	XTPAXCL	

③ Max. rated operation voltage U_e = 690V, rated uninterrupted current I_u = 63A. Can be used for individual and group protection. For group protection and in combination with the XTPR…D, order additional XTPAXIT incoming terminal if required. Mounting next to or behind the manual motor protector. 16 – 63A XTPR...D: 100 kA/400V, 10 kA/690V.

Lockable Rotary Handle



Table 34-157. Replacement Lockable Rotary Handle

Description	Pkg. Qty.	Catalog Number	Price U.S. $ ④
Lockable Rotary Handle that mounts directly to the XTPR manual motor protectors. Comes standard with XTPR.	5	XTPAXLRH	

④ Orders must be placed in multiples of package quantity listed.

Discount Symbol **1CD7**

IP65 Rotary Handle Mechanism

Table 34-158. IP65 Rotary Handle Mechanism ①②③④

	Description	Enclosure Rating	Pkg. Qty.	Catalog Number	Price U.S. $ ⑤
Complete Kits — Includes Handle, Shaft, and Required Hardware					
	Rotary Handle Mechanism — Black. ⑥	IP65 NEMA 12 UL/CSA 4X	1	**XTPAXRHMB**	
	Rotary Handle Mechanism — Red/Yellow. ⑦		1	**XTPAXRHMRY**	
	Rotary Handle Mechanism — Black — Rotated 90° from Vertical. ⑥		1	**XTPAXRHM90B**	
	Rotary Handle Mechanism — Red/Yellow — Rotated 90° from vertical. ⑦		1	**XTPAXRHM90RY**	
Separate Parts					
	Rotary Handle Only — Black. ⑥	IP65 NEMA 12 UL/CSA 4X	10	**XTPAXRHB10**	
	Rotary Handle Only — Red/Yellow. ⑦		10	**XTPAXRHRY10**	
	Rotary Handle Only — Black — Rotated 90° from vertical. ⑥		10	**XTPAXRH90B10**	
	Rotary Handle Only — Red/Yellow — Rotated 90° from vertical. ⑦		10	**XTPAXRH90RY10**	
	Shaft Only — Includes Shaft to mount to XTPR, 175 mm length.	—	10	**XTPAXRHMSFT**	
	Shaft Only — Includes Shaft to mount to XTPR, 72 mm length, minimum 50 pcs. — Bulk Pack.	—	50	**XTPAXRHMSFTB72**	
	Shaft Only — Includes Shaft to mount to XTPR, 98 mm length, minimum 50 pcs. — Bulk Pack.	—	50	**XTPAXRHMSFTB98**	

① Plug-in connection shafts, XTPAXRHMSFT_ can be cut to desired length for mounting depths of 100 – 240 mm. Carrier with extension shaft included.
② With ON/OFF switch position and "+" (tripped), lockable with 3 padlocks, 4 – 8 mm hasp. Can be locked in the OFF position, if required.
③ Rotary Handle Mechanisms ship with door interlock disabled. See instruction publication with product for how to enable door interlock.
④ Not for use with XTPAXFAEM20 early-make front mount auxiliary contact.
⑤ Orders must be placed in multiples of package quantity listed.
⑥ For use on main switches to IEC/EN 60204.
⑦ For use on main switches with Emergency-Stop function to IEC/EN 60204.

Sealing Facility



Table 34-159. Sealing Facility

Description	Pkg. Qty.	Catalog Number	Price U.S. $ ⑧
To prevent tampering with the overload release and the test function. It can be sealed using industry standard sealing wire. For use with XTPR manual motor protectors.	5	**XTPAXSW**	

⑧ Orders must be placed in multiples of package quantity listed.

Discount Symbol **1CD7**

Three-Phase Commoning Links

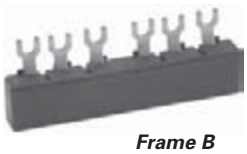

Frame B

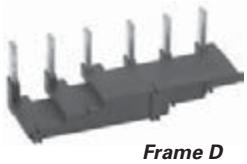

Frame D

For parallel power feed to several manual motor protectors on terminals 1, 3 and 5.

Table 34-160. Three-Phase Commoning Links ①

	For Use with…	Qty. MMP	Length of Link (mm)	Unit Width (mm)	Pkg. Qty.	Catalog Number	Price U.S. $ ②
Frame B							
	MMP with no side mounted auxiliaries or voltage releases	2	90	45	10	**XTPAXCLKA2**	
		3	135	45	10	**XTPAXCLKA3**	
		4	180	45	10	**XTPAXCLKA4**	
		5	225	45	10	**XTPAXCLKA5**	
	Each MMP with one auxiliary contact or trip-indicating auxiliary contact fitted on the right	2	99	45 + 9	10	**XTPAXCLKB2**	
		3	153	45 + 9	10	**XTPAXCLKB3**	
		4	207	45 + 9	10	**XTPAXCLKB4**	
		5	261	45 + 9	10	**XTPAXCLKB5**	
	Each MMP with an auxiliary contact and trip-indicating auxiliary contact mounted on the right or a voltage release mounted on the left.	2	108	45 + 18	10	**XTPAXCLKC2**	
		4	234	45 + 18	10	**XTPAXCLKC4**	
Frame D							
	MMP with no side mounted auxiliaries or voltage releases	2	110	55	1	**XTPAXCLKA2D**	
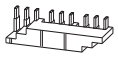		3	165	55	1	**XTPAXCLKA3D**	
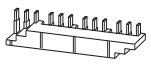		4	220	55	1	**XTPAXCLKA4D**	
	Each MMP with one auxiliary contact or trip-indicating auxiliary contact fitted on the right	2	119	55 + 9	1	**XTPAXCLKB2D**	
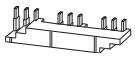		3	183	55 + 9	1	**XTPAXCLKB3D**	
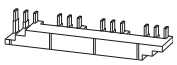		4	247	55 + 9	1	**XTPAXCLKB4D**	
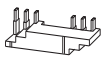	Each MMP with an auxiliary contact or trip-indicating auxiliary contact mounted on the right or a voltage release mounted on the left.	2	128	55 + 18	1	**XTPAXCLKC2D**	
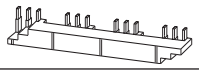		4	274	55 + 18	1	**XTPAXCLKC4D**	

① Protected against accidental contact. B-Frame short circuit proof U_e = 690V, I_u = 63A; D-Frame short circuit proof U_e = 690V, I_u = 128A. Frame B links can be combined by rotating mounting. Frame D links cannot be combined.

② Orders must be placed in multiples of package quantity listed.

Discount Symbol **1CD7**

Shroud for Unused Commoning Link Terminals

Table 34-161. Shroud for Unused Terminals of Three-Phase Commoning Links

	For Use with…	Description	Pkg. Qty.	Catalog Number	Price U.S. $ ①
	B-Frame XTPR	To cover unused terminals on three-phase commoning link. Protected against direct contact.	20	**XTPAXUTS**	
	D-Frame XTPR		10	**XTPAXUTSD**	

① Orders must be placed in multiples of package quantity listed.

Incoming Terminal for Three-Phase Commoning Link ②

Table 34-162. Incoming Terminal

	For Use with…	Pkg. Qty.	Catalog Number	Price U.S. $ ③
	B-Frame XTPR, XTPB	5	**XTPAXIT**	

② For three-phase commoning link, protected against accidental contact, U_e = 690V, I_u = 63A; For conductor cross-sections: 2.5 – 25 mm^2 stranded; 2.5 – 16 mm^2 flexible with ferrules, AWG 14-6.
③ Orders must be placed in multiples of package quantity listed.

Line-Side Adapter ④

Table 34-163. Line-Side Adapter

	For Use with…	Pkg. Qty.	Catalog Number	Price U.S. $ ⑤
	B-Frame XTPR to create a UL 508 Type E/F Manual Combination Starter	5	**XTPAXLSA**	
	D-Frame XTPR to create a UL 508 Type E/F Manual Combination Starter	1	**XTPAXLSAD** ⑥	

④ XTPAXLSA is for three-phase commoning link, finger- and back-of-hand proof, U_e = 690V, I_u = 60A for conductor cross sections: 2.5 – 25 mm^2 stranded, 2.5 – 16 mm^2 flexible with ferrule, AWG 14-6.
⑤ Orders must be placed in multiples of package quantity listed.
⑥ XTPAXLSAD cannot be combined with three-phase commoning links.

Discount Symbol **1CD7**

Combination Connection Kits

Table 34-164. Combination Connection Kits

	For Use with…	Description	Std. Pack	Catalog Number	Price U.S. $
Non-reversing Starters					
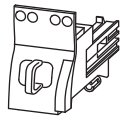	XTPR...B + XTCE...B	Comprised of: ■ Mechanical connection element for XTPR...B and contactor ■ Main current wiring between XTPR...B and contactor in tool-less plug connection ■ Cable guidance Use contactor auxiliary switch XTCEXFAT_. Control cable guidance: max. 6 cables up to 2.5 mm^2 external diameter or 4 cables up to 3.5 mm^2 external diameter.	1	**XTPAXTPCB**	
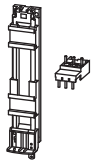	XTPR...B + XTCE...C	Comprised of: ■ DIN rail adapter plate ■ Main current wiring between XTPR and contactor	1	**XTPAXTPCC**	
	XTPR...D + XTCE...D		1	**XTPAXTPCD**	
Reversing Starters					
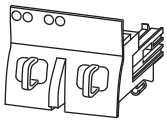	XTPR...B + XTCE...B01_	Comprised of: ■ Mechanical connection element for XTPR...B and contactor ■ Reversing starter main current wiring in tool-less plug connection ■ Control cables for electrical interlocking in tool-less plug connection: – K1M: A1 – K2M: 21 – K1M: 21 – K2M: A1 – K1M: A2 – K2M: A2 ■ Cable guidance Use contactor auxiliary switch XTCEXFAT_. Control cable guidance: max. 6 cables up to 2.5 mm^2 external diameter or 4 cables up to 3.5 mm^2 external diameter.	1	**XTPAXTPCRB**	
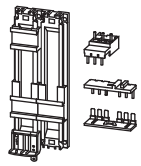	XTPR...B + XTCE...C	Comprised of: ■ DIN rail adapter plate ■ Reversing starter main current wiring	1	**XTPAXTPCRC**	
Star-Delta Starter Sets					
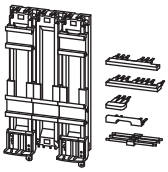	XTPR...B + XTCE...B	Comprised of: ■ DIN rail adapter plate ■ Main current wiring between XTPR...B and contactor ■ Electrical interlock between delta and star contactor ■ Use as contactor auxiliary switch XTCEXFAT_	1	**XTPAXSDSB**	
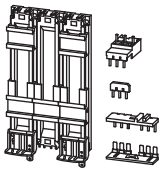	XTPR...B + XTCE...C	Comprised of: ■ DIN rail adapter plate ■ Main current wiring between XTPR...B and contactor	1	**XTPAXSDSC**	

Discount Symbol **1CD7**

Combination Connection Kits

Table 34-164. Combination Connection Kits (Continued)

	For Use with…	Description	Std. Pack	Catalog Number	Price U.S. $ ①
Electrical Connection Module					
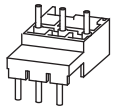	XTPR...B + XTCE...C	Comprised of: ■ Main current wiring between XTPR...B and contactor ■ Use only in combination with busbar adapter	5	**XTPAXECMC**	
	XTPR...D + XTCE...D	Comprised of: ■ Main current wiring between XTPR...D and contactor ■ Use only in combination with busbar adapter	5	**XTPAXECMD**	
DIN Rail Adapter Plates					
	XTPAXTPCB XTPAXTPCRB	Comprised of: ■ 45 mm wide adapter plate with one DIN rail ■ Connection element for side-by-side positioning of further plates	4	**XTPAXTPCPB**	
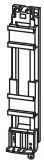	XTPR...B + XTCE...C XTPAXECMC	Comprised of: ■ 45 mm wide adapter plate with two DIN rails ■ Connection element for side-by-side positioning of further plates	4	**XTPAXTPCRPB**	
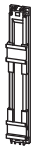	XTPAXECMD XTPR...D + XTCE...C XTPR...D + XTCE...D	Comprised of: ■ 55 mm wide adapter plate with two DIN rails ■ Connection cams for further plates ■ For use with reversing and star-delta starters	4	**XTPAXTPCPD**	
Lateral Module					
	—	■ Can be grouped on the DIN rail adapter ■ Expansion of the mounting width by 9 mm	10	**XTPAXLM**	
Connection Element					
	—	■ For connection of several DIN rail adapters	50	**XTPAXCNE**	

① Orders must be placed in multiples of package quantity listed.

34

Discount Symbol **1CD7**

Pushbutton MMP Enclosures



B-Frame

34

Table 34-165. Insulated Enclosures for Surface Mounting of XTPB Pushbutton Motor-Protective Circuit Breakers — Global Usage ①

	Degree of Protection	For Use with…	Description	Catalog Number	Price U. S. $	Approx. Dimensions mm [in] H x W x D
	IP40 NEMA 1	XTPB MMP Only or with: XTPAXFA..., XTPBXFAEM20, XTPAXSA..., XTPAXUVR..., XTPAXSR...	—	**XTPBXENCS40**		158 x 80 x 116.5 [6.22 x 3.15 x 4.59]
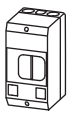	IP65 NEMA 3R, 4X, 12, 13		With actuation membrane.	**XTPBXENCS65**		158 x 80 x 116.5 [6.22 x 3.15 x 4.59]
	IP65 NEMA 3R, 4X, 12, 13	XTPB MMP Only or with: XTPAXFA..., XTPAXUVR..., XTPAXSR..., XTPAXCL	Lockable in OFF position.	**XTPBXENCSLO65**		158 x 80 x 129.5 [6.22 x 3.15 x 5.10]
	IP65 NEMA 3R, 4X, 12, 13	XTPB MMP Only or with: XTPAXFA..., XTPBXFAEM20, XTPAXUVR..., XTPAXSR..., XTPAXCL	Lockable in OFF position in combination with XTPBXFAEM20 Early Make front mount auxiliary contact	**XTPBXENCSLE65**		158 x 80 x 129.5 [6.22 x 3.15 x 5.10]
	IP65 NEMA 3R, 4X, 12, 13		With Emergency-Stop (E-Stop) pushbutton actuator, Red-Yellow	**XTPBXENCSES65**		158 x 80 x 177.2 [6.22 x 3.15 x 6.98]
	IP65 NEMA 3R, 4X, 12, 13		With Emergency-Stop (E-Stop) pushbutton actuator, Red-Yellow key release	**XTPBXENCSEK65**		158 x 80 x 177.2 [6.22 x 3.15 x 6.98]

① Integrated terminal for PE(N) connection, two M25 cable entry knockouts at top and at bottom.

Table 34-166. Insulated Enclosures for Surface Mounting of XTPB Pushbutton Manual Motor Protectors — North American Usage ②③

	Degree of Protection	For Use with…	Description	Catalog Number	Price U. S. $	Approx. Dimensions mm [in] H x W x D
	IP41 NEMA 1	XTPB MMP Only or with: XTPAXFA..., XTPBXFAEM20, XTPAXSA..., XTPAXUVR..., XTPAXSR..., XTPAXCL	—	**XTPBXENAS41**		158 x 80 x 116.5 [6.22 x 3.15 x 4.59]
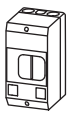	IP65 NEMA 3R, 4X, 12, 13		With actuating diaphragm	**XTPBXENAS65**		158 x 80 x 116.5 [6.22 x 3.15 x 4.59]
	IP65 NEMA 3R, 4X, 12, 13	XTPB MMP Only or with: XTPAXFA..., XTPAXUVR..., XTPAXSR..., XTPAXCL	Lockable in OFF position	**XTPBXENASLO65**		158 x 80 x 129.5 [6.22 x 3.15 x 5.10]
	IP65 NEMA 3R, 4X, 12, 13	XTPB MMP Only or with: XTPAXFA..., XTPBXFAEM20, XTPAXUVR..., XTPAXSR..., XTPAXCL	Lockable in OFF position in combination with XTPBXFAEM20 Early Make front mount auxiliary contact.	**XTPBXENASLE65**		158 x 80 x 129.5 [6.22 x 3.15 x 5.10]
	IP65 NEMA 3R, 4X, 12, 13		With Emergency-Stop (E-Stop) pushbutton actuator, Red-Yellow	**XTPBXENASES65**		158 x 80 x 177.2 [6.22 x 3.15 x 6.98]
	IP65 NEMA 3R, 4X, 12, 13		With Emergency-Stop (E-Stop) pushbutton actuator, Red-Yellow key release	**XTPBXENASEK65**		158 x 80 x 177.2 [6.22 x 3.15 x 6.98]

② Built-in terminal for PE(N).
③ North American enclosures come with conduit adapters for use with 1/2" NPT.

Dimensions ..... **Page 34-150**
Discount Symbol **1CD7**

Table 34-167. Insulated Enclosures for Flush Mounting of XTPB Pushbutton Manual Motor Protectors — Global and North American Usage ①

	Degree of Protection	For Use with…	Description	Catalog Number	Price U. S. $	Approx. Dimensions mm [in] H x W x D
	Front IP40 NEMA 1	XTPB Only or with: XTPAXFA…, XTPBXFAEM20, XTPAXSA…, XTPAXUVR…, XTPAXSR…, XTPAXCL	—	**XTPBXENCF40**		129 x 90.2 x 115.2 [5.08 x 3.55 x 4.54]
	Front IP65 NEMA 3R, 4X, 12, 13		With actuation membrane	**XTPBXENCF55**		129 x 90.2 x 115.2 [5.08 x 3.55 x 4.54]
	Front IP65 NEMA 3R, 4X, 12, 13	XTPB Only or with: XTPAXFA…, XTPAXUVR…, XTPAXSR…, XTPAXCL	Lockable in OFF position	**XTPBXENCFLO55**		129 x 90.2 x 115.2 [5.08 x 3.55 x 4.54]
	Front IP65 NEMA 3R, 4X, 12, 13	XTPB Only or with: XTPAXFA…, XTPBXFAEM20, XTPAXUVR…, XTPAXSR…, XTPAXCL	Lockable in OFF position in combination with XTPBXFAEM20 Early Make front mount auxiliary contact	**XTPBXENCFLE55**		129 x 90.2 x 115.2 [5.08 x 3.55 x 4.54]
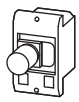	Front IP65 NEMA 3R, 4X, 12, 13		With Emergency-Stop (E-Stop) pushbutton actuator	**XTPBXENCFES55**		129 x 90.2 x 175.9 [5.08 x 3.55 x 6.93]
	Front IP65 NEMA 3R, 4X, 12, 13		With Emergency-Stop (E-Stop) pushbutton actuator, key release	**XTPBXENCFEK55**		129 x 90.2 x 175.9 [5.08 x 3.55 x 6.93]

① Integrated terminal for PE(N) connection.

Rotary MMP Enclosures



B-Frame



D-Frame

Table 34-168. Insulated Enclosures for Surface Mounting of B-Frame (0.1 – 32A) XTPR Rotary Motor-Protective Circuit Breakers — Global Usage

	Degree of Protection	For Use with…	Description	Catalog Number	Price U. S. $	Approx. Dimensions mm [in] H x W x D
	IP41 with vertical mounting	B-Frame XTPR Only or with: XTPAXFA…, XTPAXSA…, XTPAXSATR…, XTPAXUVR…, XTPAXSR…, XTPAXCL	Cover with aperture dimensioned to accommodate front of MMP. IP40, when mounted turned through 90° to left/right	**XTPAXENCS41** ②		160 x 100 x 104 [6.30 x 3.94 x 4.09]
	IP65		With black/grey rotary handle	**XTPAXENCS65B** ②		160 x 100 x 130 [6.30 x 3.94 x 5.12]
	IP65		With red/yellow rotary handle for use as Emergency-Stop switches to IEC/EN 60204	**XTPAXENCS65RY** ②		160 x 100 x 130 [6.30 x 3.94 x 5.12]
	IP40	B-Frame XTPR Only or with: XTPAXSA…, XTPAXUVR…, XTPAXSR…, XTPAXCL	Cover with aperture dimensioned to accommodate front of MMP.	**XTPAXENCS40** ③		158 x 80 x 100 [6.22 x 3.15 x 3.94]
	IP55	B-Frame XTPR Only or with: XTPAXFA…, XTPAXSA…, XTPAXUVR…, XTPAXSR…, XTPAXCL	With black/gray rotary handle	**XTPAXENCS55B** ③		158 x 80 x 125.5 [6.22 x 3.15 x 4.94]
	IP55		With red/yellow rotary handle for use as Emergency-Stop switches to IEC/EN 60204	**XTPAXENCS55RY** ③		158 x 80 x 125.5 [6.22 x 3.15 x 4.94]

② M25 metric cable entry knock-out, top and bottom. Cable push-through membrane, top and bottom, in the back plate and as a control line entry. Includes N and PE terminals.

③ Integrated terminal for PE(N) connection, two M25 cable entry knockouts at the top and bottom.

Discount Symbol **1CD7**

Table 34-169. Insulated Enclosures for Surface Mounting of B-Frame (0.1 – 32A) XTPR Rotary Manual Motor Protectors — North American Usage ①

	Degree of Protection	For Use with…	Description	Catalog Number	Price U. S. $	Approx. Dimensions mm [in] H x W x D
	IP55 NEMA 1, 12, 3R	B-Frame XTPR Only or with: XTPAXSA…and XTPAXFA…, XTPAXUVR…and XTPAXFA…, XTPAXSR…and XTPAXFA…, XTPAXCL	With black/gray rotary handle	**XTPAXENAS55B**		160 x 100 x 130 [6.30 x 3.94 x 5.12]
			With red/yellow rotary handle for use as Emergency-Stop switch to VDE 0113	**XTPAXENAS55RY**		160 x 100 x 130 [6.30 x 3.94 x 5.12]

① Built-in N and PE terminal, lower part without knockouts.

Table 34-170. Insulated Enclosures for Surface Mounting of B-Frame XTPR (0.1 – 32A) Rotary Motor-Protective Circuit Breakers with XTPAXFAEM20 Early-Make Front Mount Auxiliary Contact — Global Usage

	Degree of Protection	For Use with…	Description	Catalog Number	Price U. S. $	Approx. Dimensions mm [in] H x W x D
	IP65	B-Frame XTPR and XTPAXFAEM20 only or with: XTPAXFA…, XTPAXSA…, XTPAXSATR…, XTPAXUVR…, XTPAXSR…, XTPAXCL	With black/gray rotary handle	**XTPAXENCSEM65B**		160 x 100 x 130 [6.30 x 3.94 x 5.12]
	IP65		With red/yellow rotary handle for use as Emergency-Stop switches to IEC/EN 60204	**XTPAXENCSEM65RY**		160 x 100 x 130 [6.30 x 3.94 x 5.12]
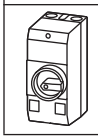	IP55	B-Frame XTPR and XTPAXFAEM20 only or with: XTPAXFA…, XTPAXUVR…, XTPAXSR…, XTPAXCL	With black/gray rotary handle	**XTPAXENCSEM55B**		158 x 80 x 100 [6.22 x 3.15 x 3.94]
	IP55		With red/yellow rotary handle for use as Emergency-Stop switches to IEC/EN 60204	**XTPAXENCSEM55RY**		158 x 80 x 100 [6.22 x 3.15 x 3.94]

Table 34-171. Insulated Enclosures for Surface Mounting of B-Frame XTPR (0.1 – 32A) Rotary Manual Motor Protectors with XTPAXFAEM20 Early-Make Front Mount Auxiliary Contact — North American Usage ②

	Degree of Protection	For Use with…	Description	Catalog Number	Price U. S. $	Approx. Dimensions mm [in] H x W x D
	IP55 NEMA 1, 12, 3R	B-Frame XTPR Only or with: XTPAXSA…, XTPAXUVR…, XTPAXCL	With black/grey rotary handle	**XTPAXENASEM55B**		160 x 100 x 130 [6.30 x 3.94 x 5.12]
			With red/yellow rotary handle for use as Emergency-Stop switch to VDE 0113	**XTPAXENASEM55RY**		160 x 100 x 130 [6.30 x 3.94 x 5.12]

② Built-in N and PE terminal, lower part without knockouts.

Table 34-172. Insulated Enclosures for Flush Mounting of B-Frame (0.1 – 32A) XTPR Rotary Manual Motor Protectors — Global Usage ③

	Degree of Protection	For Use with…	Description	Catalog Number	Price U. S. $	Approx. Dimensions mm [in] H x W x D
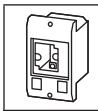	Front IP40	B-Frame XTPR Only or with: XTPAXSA…, XTPAXUVR…, XTPAXSR…, XTPAXCL	Cover with aperture dimensioned to accommodate front of MMP.	**XTPAXENCF40**		129 x 85 x 96 [5.08 x 3.35 x 3.78]
	Front IP55	B-Frame XTPR Only or with: XTPAXSA…, XTPAXUVR…, XTPAXSR…, XTPAXFA…, XTPAXCL	With black/gray rotary handle	**XTPAXENCF55B**		129 x 85 x 124 [5.08 x 3.35 x 4.88]
			With red/yellow rotary handle for use as Emergency-Stop switches to IEC/EN 60204	**XTPAXENCF55RY**		129 x 85 x 124 [5.08 x 3.35 x 4.88]

③ Integrated terminal for PE(N) connection.

Table 34-173. Insulated Enclosures for Surface Mounting of D-Frame (10 – 65A) Rotary Motor-Protective Circuit Breakers ④⑤

	Degree of Protection	For Use with…	Description	Catalog Number	Price U. S. $	Approx. Dimensions mm [in] H x W x D
	IP65 NEMA 1, 12, 3R, 4X	D-Frame XTPR Only or with: XTPAXFA…, XTPAXFAEM20, XTPAXSA…, XTPAXSATR…, XTPAXUVR…, XTPAXSR…, XTPAXCL	With black/gray rotary handle	**XTPAXENCSD65B**		240 x 160 x 197 [9.45 x 6.30 x 7.76]
	IP65 NEMA 1, 12, 3R, 4X		With red/yellow rotary handle for use as Emergency-Stop switches to IEC/EN 60204	**XTPAXENCSD65RY**		240 x 160 x 197 [9.45 x 6.30 x 7.76]

④ Integrated terminal for PE(N) connection.

⑤ Metric knockouts:
Top ÷ bottom: M25/M32
In backplate: M25/M32
Control cable entry: M20

Discount Symbol **1CD7**

MMP Enclosure Accessories

Table 34-174. XTPR Manual Motor Protector Enclosure Padlock Attachment

	For Use with…	Description	Pkg. Qty.	Catalog Number	Price U. S. $ ①
	XTPAXENCS65B, XTPAXENCS65RY, XTPAXENCSEM65B, XTPAXENCSEM65RY, XTPAXENCS55B, XTPAXENCS55RY, XTPAXENCSEM55B, XTPAXENCSEM55RY	Padlocking feature. Up to 3 padlocks with 3 – 6 mm hasp thickness. For use as main switch to IEC/EN 60204.	3	**XTPAXPL1** ②	
	XTPAXENCSD65B, XTPAXENCSD65RY		1	**XTPAXPL2** ②	
	XTPAXENCF55B, XTPAXENCF55RY		3	**XTPAXPL3** ③	

① Orders must be placed in multiples of package quantity listed.
② Lockable in the 0-position of the XTPR manual motor protector.
③ Lockable in the OFF position of the B-Frame XTPR manual motor protector.

Table 34-175. Neutral Terminal for use with XTPB and B-Frame XTPR Flush-Mount Enclosures

	For Use with…	Description	Pkg. Qty.	Catalog Number	Price U. S. $ ④
	**XTPBXENCF40, XTPBXENCF55, XTPAXENCF40, XTPAXENCF55B, XTPAXENCF55RY**	**For connection of a fifth conductor**	20	**XTPAXNT**	

④ Orders must be placed in multiples of package quantity listed.

Metric Cable Glands to EN 50262



- With locknut and internal strain relief
- IP68 up to 5 bar, hydrogen free

Table 34-176. Metric Cable Glands

Description	Pkg. Qty.	Catalog Number	Price U.S. $ ⑤
20.5 mm Metric Cable Gland 6 – 13 mm Wire	20	**XTPAXMCG20**	
25.5 mm Metric Cable Gland 9 – 17 mm Wire	20	**XTPAXMCG25**	
32.5 mm Metric Cable Gland 13 – 21 mm Wire	10	**XTPAXMCG32**	
32.5 mm Metric Cable Gland 18 – 25 mm wire	10	**XTPAXMCG32G**	

⑤ Orders must be placed in multiples of package quantity listed.

IP65 Metric Diaphragm Grommet ⑥



- IP65
- With internal push-through diaphragm

Table 34-177. IP65 Metric Diaphragm Grommet

Description	Pkg. Qty.	Catalog Number	Price U.S. $ ⑦
20.5 mm Diaphragm Grommet 1 – 13 mm Wire	100	**XTPAXMDG20**	
25.5 mm Diaphragm Grommet 1 – 18 mm Wire	100	**XTPAXMDG25**	
32.5 mm Diaphragm Grommet 1 – 24 mm Wire	100	**XTPAXMDG32**	

⑥ With integral push-through diaphragm.
⑦ Orders must be placed in multiples of package quantity listed.

Indicating Lights with Neon Bulb

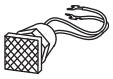

- For use with XTPR and XTPB enclosures
- Lights do not carry individual IP or NEMA rating. All enclosure ratings remain valid when using indicating lights.

Table 34-178. Indicating Lights

Color	Description — Indicating Light	Pkg. Qty.	Catalog Number	Price U.S. $ ⑧
White	110 – 230V	10	**XTPAXILWB**	
	230 – 240V	10	**XTPAXILWN**	
	415 – 500V	10	**XTPAXILWC**	
Green	110 – 230V	10	**XTPAXILGB**	
	230 – 240V	10	**XTPAXILGN**	
	415 – 500V	10	**XTPAXILGC**	
Red	110 – 230V	10	**XTPAXILRB**	
	230 – 240V	10	**XTPAXILRN**	
	415 – 500V	10	**XTPAXILRC**	

⑧ Orders must be placed in multiples of package quantity listed.

Discount Symbol **1CD7**

Technical Data and Specifications

Table 34-179. *XT* Manual Motor Protectors — Technical Data and Specifications

Description	XTPBP16B – XTPB016B	XTPRP16B – XTPR032B	XTPR016D – XTPR063D	XTPMP16B – XTPM032B	XTPTP16B – XTPT025B
General					
Standards	IEC/EN 60947, VDE 0660, UL 508, CSA C 22.2 No. 14				
Climatic proofing	Damp heat, constant, to IEC 60068-2-78; damp heat, cyclic, to IEC 60068-2-30				
Ambient temperature, °C Storage Open Enclosed	 -25 / 80 -25 / 55 -25 / 40	 -25 / 80 -25 / 55 -25 / 40	 -25 / 70 -25 / 55 -25 / 40	 -25 / 80 -25 / 55 -25 / 40	 -25 / 80 -25 / 55 -25 / 40
Mounting position	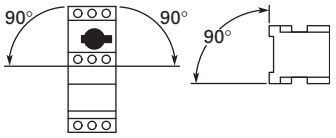		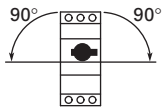	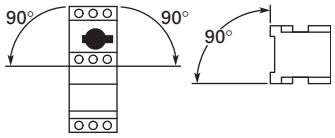	
Direction of incoming supply	As required	As required	As required	As required	As required
Degree of protection Device Terminals	 IP20 IP00	 IP20 IP00	 IP20 IP00	 IP20 IP00	 IP20 IP00
Protection against direct contact	Finger- and back-of-hand proof				
Shock resistance half-sinusoidal shock 10 mS to IEC 60068-2-27 (g)	25	25	15	25	25
Altitude (m), maximum	2000	2000	2000	2000	2000
Terminal capacity Solid (mm^2) Flexible with ferrule to DIN 46228, (mm^2) Solid or stranded (AWG)	 1 x (1 – 6) 2 x (1 – 6) 1 x (1 – 6) 2 x (1 – 6) 18 – 10	 1 x (1 – 6) 2 x (1 – 6) 1 x (1 – 6) 2 x (1 – 6) 18 – 10	 1 x (1 – 50) 2 x (1 – 35) 1 x (1 – 35) 2 x (1 – 35) 14 – 2	 1 x (1 – 6) 2 x (1 – 6) 1 x (1 – 6) 2 x (1 – 6) 18 – 10	 1 x (1 – 6) 2 x (1 – 6) 1 x (1 – 6) 2 x (1 – 6) 18 – 10
Terminal screw tightening torque Main cable, Nm Main cable, lb-in Control circuit cable, Nm Control circuit cable, lb-in	 1.7 15.0 1 8.9	 1.7 15.0 1 8.9	 3 26.6 1 8.9	 1.7 15.0 1 8.9	 1.7 15.0 1 8.9
Main contacts					
Rated impulse withstand voltage (U_{imp}), V AC	6000	6000	6000	6000	6000
Overvoltage category / pollution degree	III / 3	III / 3	III / 3	III / 3	III / 3
Rated operational voltage (U_e), V AC	690	690	690	690	690
Rated uninterrupted current = rated operational current ($I_u = I_e$) in amperes	25 or current setting of the overcurrent release	32 or current setting of the overcurrent release	63 or current setting of the overcurrent release	32 or current setting of the overcurrent release	25 or current setting of the overcurrent release
Rated frequency, Hz	40 – 60	40 – 60	40 – 60	40 – 60	40 – 60
Current heat loss (3-pole at operating temperature), W	6	6	22	6	6
Lifespan, mechanical (ops)	50,000	100,000	30,000	100,000	100,000
Lifespan, electrical (AC-3 at 400 V) (ops)	50,000	100,000	30,000	100,000	100,000
Maximum operating frequency, operations/hr	25	40	40	40	40
Short-circuit rating AC DC (kA)	 See **Page 34-147**. 60	 60 (up to XTPR016B) 40 (XTPR020B – XTPR032B)	 60	 60 (up to XTPM016B) 40 (XTPM020B – XTPR032B)	 60 (up to XTPT016B) 40 (XTPT020B – XTPT025B)
Motor switching capacity AC-3 (up to 690 V) in amperes DC-5 (up to 250 V) in amperes	 25 25	 32 25 (3 contacts in series)	 65 63 (3 contacts in series)	 32	 25

Table 34-179. *XT* Manual Motor Protectors — Technical Data and Specifications (Continued)

Description	XTPBP16B – XTPB016B	XTPRP16B – XTPR032B	XTPR016D – XTPR063D	XTPMP16B – XTPM032B	XTPTP16B – XTPT025B
Releases					
Overload release setting range (x I_u)	0.6 – 1.0	0.6 – 1.0	0.6 – 1.0	—	0.6 – 1.0
Fixed short-circuit release (x I_u)	14	14	14	14	20
Short-circuit release tolerance	± 20%	± 20%	± 20%	± 20%	± 20%
Phase-failure sensitivity	IEC/EN 60947-1-1, VDE 0660 Part 102			—	IEC/EN 60947-1-1, VDE 0660 Part 102
Temperature compensation to IEC/EN 60947, VDE 0660, °C Operating range, °C	 -5 / 40 -25 / 55	 -5 / 40 -25 / 55	 -5 / 40 -25 / 55	 -5 / 40 -25 / 55	 -5 / 40 -25 / 55
Temperature compensation residual error for T > 20°C, %/K	≤ 0.25	≤ 0.25	≤ 0.25	≤ 0.25	≤ 0.25

Table 34-180. Auxiliary Contacts — Technical Data and Specifications

Description	XTPAXSA_ _	XTPAXFA_ _	XTPA(B)XFAEM_ _	XTPAXSATR_ _
Rated Impulse withstand voltage, U_{imp} (V AC)	6000	4000	4000	6000
Overvoltage category/pollution degree	III/3	III/3	III/3	III/3
Rated operational voltage U_e (VAC) U_e (VDC)	 500 250	 440 250	 440 250	 500 250
Safe isolation to VDE 0106 Part 101 and Part 101/A1 Between auxiliary contacts and main contacts (V AC)	 690	 690	 690	 690
Rated operational current				
AC-15 220 – 240 V, I_e (A) 380 – 415 V, I_e (A) 440 – 500 V, I_e (A)	 3.5 2 1	 1 — —	 1 — —	 3.5 2 1
DC-13 L/R < 100 ms 24 V, I_e (A) 60 V, I_e (A) 110 V, I_e (A) 220 V, I_e (A)	 2 1.5 1 0.25	 2 — — —	 2 — — —	 2 1.5 1 0.25
Lifespan				
Mechanical, operations (x 10^6)	0.1	0.1	0.1	0.01
Electrical, operations (x 10^6)	0.05	0.1	0.1	0.005
Contact reliability (@ U_e = 24V DC, U_{min} – 17V, I_{min} = 5.4 mA, fault probability (λ)	< 10^{-8} < 1 fault at 1 x 10^8 operations			
Positively driven contacts to ZH 1/457	Yes	—	—	—
Short-circuit rating without welding				
Fuseless	FAZ-B4/1-HI	—	—	FAZ-B4/1-HI
Fuse (A gG/gL)	10	10	10	10
Terminal Capacity				
Solid or flexible conductor with ferrule (mm^2)	0.75 –2.5	0.75 – 1.5	0.75 – 1.5	0.75 – 2.5
Solid or stranded (AWG)	18 – 14	18 – 16	18 – 16	18 – 14

34

Table 34-181. Undervoltage Release — Technical Data and Specifications

Description	XTPAXUVR...
Cross-sections	
Solid or flexible conductor with ferrule (mm^2)	1 x (0.75 – 2.5) 2 x (0.75 – 2.5)
Solid or stranded (AWG)	1 x (18 – 14) 2 x (18 – 14)
Main Contacts	
Rated operational voltage, U_e (V AC)	42 – 480
Rated operational voltage, U_e (V DC)	24 – 250
Pick-up voltage, x U_s	0.85 – 1.1
Drop-out voltage, x U_s	0.7 – 0.35
Power Consumption	
Pick-up AC (VA)	5
Sealing AC (VA)	3

Table 34-182. Current Limiter

Description	XTPAXCL
Rated Impulse withstand Voltage (U_{imp}), V AC	6000
Overvoltage Category/ Pollution Degree	III/3
Rated operational voltage, U_e (V AC)	690
Rated interrupted current = Rated operational current ($I_u = I_e$) in amperes	63

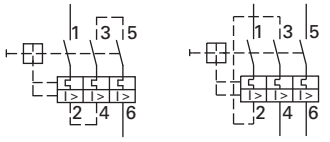

Figure 34-103. XTPB, XTPR 1- and 2-Pole Circuits with DC and AC Current

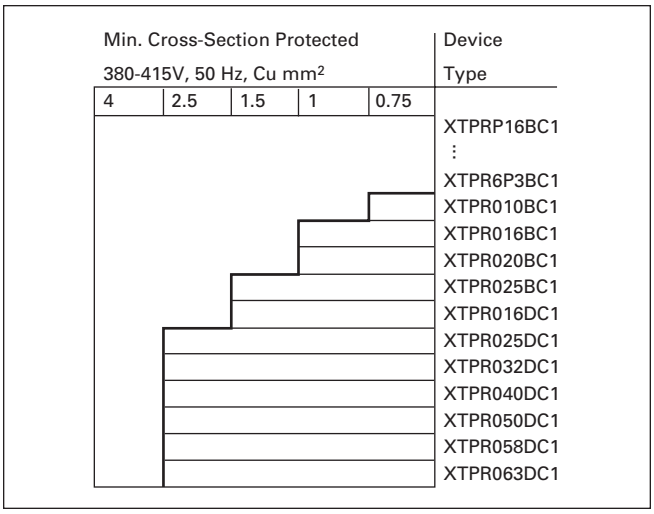

Figure 34-104. Protection of PVC Insulated Cables Against Thermal Overload at Short Circuit

The table indicates which minimum cable cross-sections are protected by XTPR motor protective circuit breakers up to their rated conditional short circuit current Iq.

Table 34-183. Shunt Release — Technical Data and Specifications

Description	XTPAXSR __
Cross-sections	
Solid or flexible conductor with ferrule (mm^2)	1 x (0.75 – 2.5) 2 x (0.75 – 2.5)
Solid or stranded (AWG)	1 x (18 – 14) 2 x (18 – 14)
Main Contacts	
Rated operational voltage, U_e (V AC)	42 – 480
Rated operational voltage, U_e (V DC)	24 – 250
AC Operating Range, x U_s	0.7 – 1.1
DC Operating Range, x U_s (intermittent operation 5s)	0.7 – 1.1
Power Consumption	
Pick-up AC (VA)	5
Sealing AC (VA)	3
Pick-up DC (VA)	3
Sealing DC (VA)	3

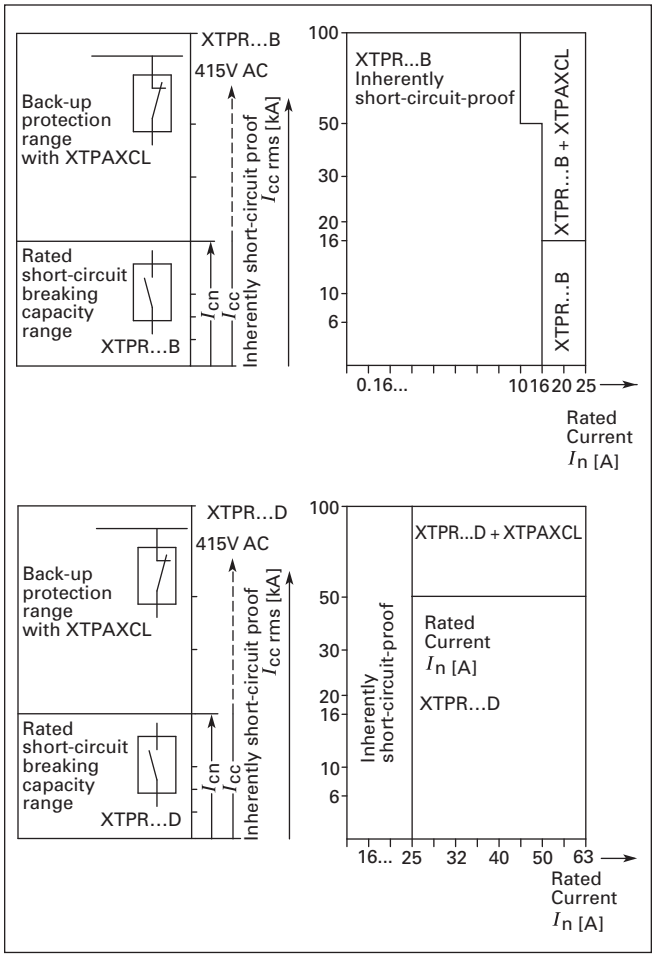

Figure 34-105. Fuseless Installation with XTPR, Back-Up Protection Diagrams

Time/Current Curve

Characteristics

The time/current characteristic, the current limiting characteristics and the I^2t characteristics were determined in accordance with DIN VDE 0660 and IEC 60 947.

The tripping characteristic of the **inverse-time delayed overload releases** (thermal overload releases or "a" releases) for DC and AC with a frequency of 0 to 400 Hz also apply to the time/current characteristic.

The characteristics apply to the cold state. At operating temperature, the tripping times of the thermal releases are reduced to approximately 25%.

Under normal operating conditions, all three poles of the device must be loaded. The three main conducting paths must be connected in series in order to protect single-phase or DC loads.

With 3-pole loading, the maximum deviation in the tripping time for 3 times the setting current and upwards is ±20% and thus in accordance with DIN VDE 0165.

The tripping characteristics for the instantaneous, electromagnetic overcurrent releases (short-circuit releases or "n" releases) are based on the rated current I_n, which is also the maximum value of the setting range for circuit-breakers with adjustable overload releases. If the current is set to a lower value, the tripping current of the "n" release is increased by a corresponding factor.

The characteristics of the electromagnetic overcurrent releases apply to frequencies of 50/60 Hz. Appropriate correction factors must be used for lower frequencies up to 16-2/3 Hz, for higher frequencies up to 400 Hz and for DC.

Time/current characteristics, current limiting characteristics and I^2t characteristics are available on request.

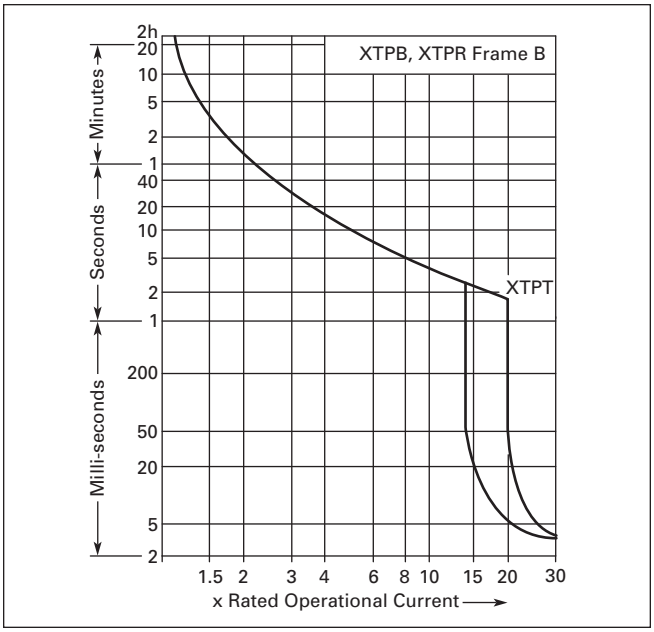

Figure 34-106. MMP Tripping Characteristics — XTPB, XTPR Frame B and XTPT (not for XTPM)

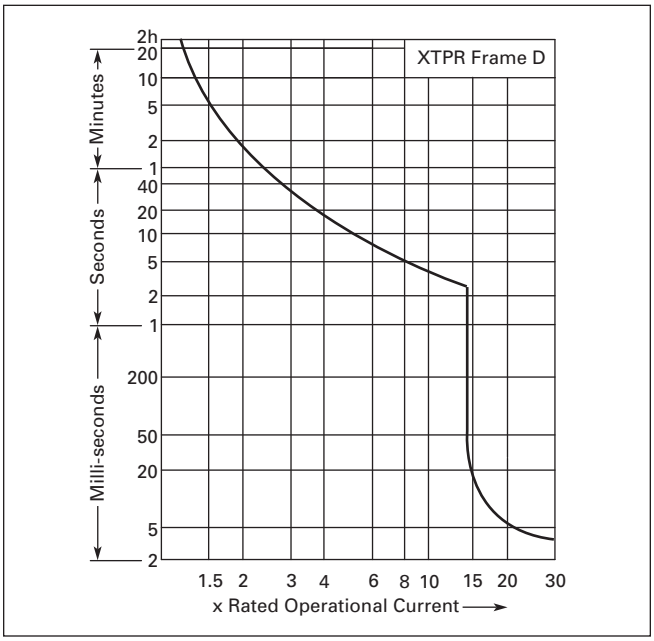

Figure 34-107. MMP Tripping Characteristics — XTPR Frame D

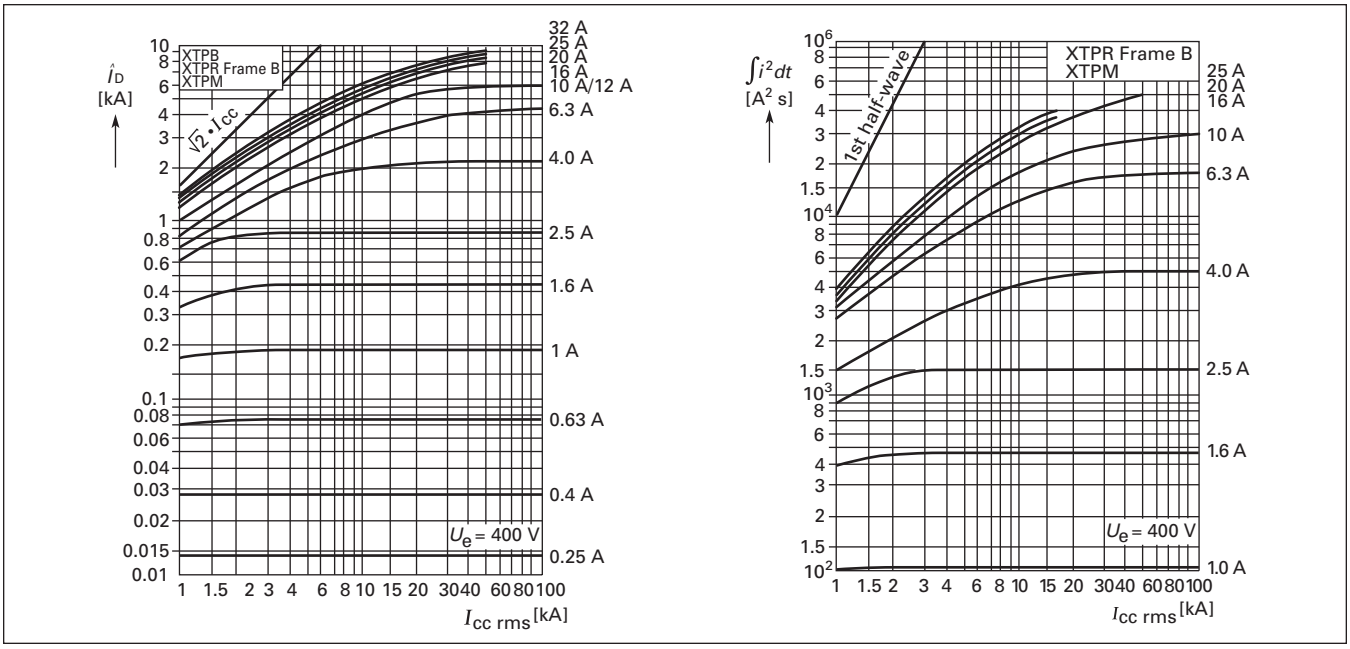

Figure 34-108. MMP Let-Through Tripping Characteristics — XTPB, XTPR Frame B, XTPT, XTPM

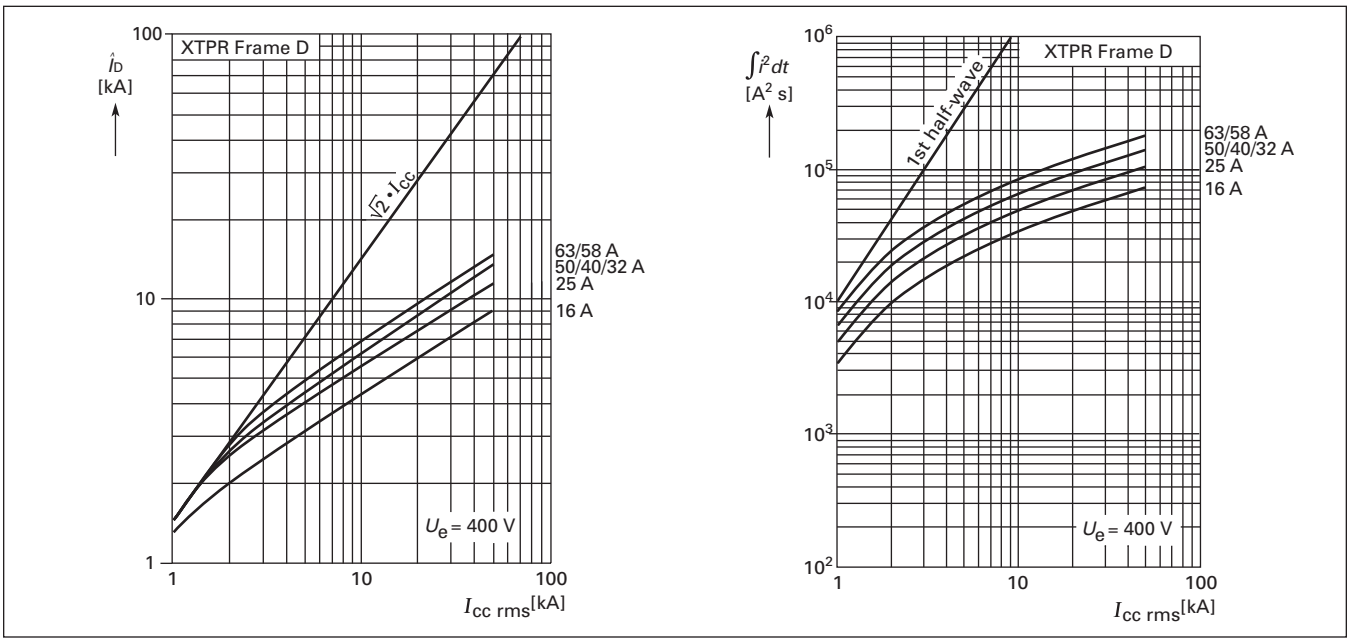

Figure 34-109. MMP Let-Through Tripping Characteristics — XTPR Frame D

Manual Motor Protector Short Circuit Ratings

Rated uninterrupted current I_u = Rated operational current I_e.
Rated conditional short circuit current I_q — IEC/EN 60947-4-1.
Rated ultimate short circuit breaking capacity I_{cu} — IEC/EN 60947-2.
Rated operational short circuit breaking capacity I_{cs} — IEC/EN 60947-2.

Table 34-184. Manual Motor Protector Short Circuit Ratings — Global Use, IEC/EN 60947

I_u	230V				400V				440V				500V				690V			
	I_q	I_{cu}	I_{cs}	Fuse ②③	I_q	I_{cu}	I_{cs}	Fuse ②③	I_q	I_{cu}	I_{cs}	Fuse ②③	I_q	I_{cu}	I_{cs}	Fuse ②③	I_q	I_{cu}	I_{cs}	Fuse ②③
A	kA	kA	kA	A	kA	kA	kA	A	kA	kA	kA	A	kA	kA	kA	A	kA	kA	kA	A
XTPB with classification Type "1" and Type "2"																				
0.16 – 1	50	50	50	50	50	50	50	50	50	50	50	50								
1.6	50	50	50	50	50	50	50	50	50	50	50	50								
2.5	50	50	50	50	50	50	50	50	50	50	50	50								
4	50	50	50	50	50	50	50	50	50	50	50	50								
6.3	50	50	50	50	50	50	50	50	50	50	50	50								
10	50	50	50	50	50	50	50	50	42	42	10	50								
12	50	50	10	50	50	50	10	50	15	15	10	50								
16	50	50	10	50	50	50	10	50	15	15	10	50								
20	50	50	10	50	50	50	10	50	10	10	10	50								
25	50	50	10	50	50	50	10	50	10	10	10	50								
XTPR…BC1, XTPT, XTPM with classification Type "1" and Type "2"																				
0.16 – 1	150 ①	150 ①	150 ①	N	150 ①	150 ①	150 ①	N	①	①	①	N	①	①	①	N	①	①	①	N
1.6	150 ①	150 ①	150 ①	N	150 ①	150 ①	150 ①	N	①	①	①	N	①	①	①	N	①	①	①	N
2.5	150 ①	150 ①	150 ①	N	150 ①	150 ①	150 ①	N	①	①	①	N	①	①	①	N	5	5	5	50
4	150 ①	150 ①	150 ①	N	150 ①	150 ①	150 ①	N	①	①	①	N	①	①	①	N	3	3	3	50
6.3	150 ①	150 ①	150 ①	N	150 ①	150 ①	150 ①	N	①	①	①	N	42	42	6	50	3	3	2	50
10	150 ①	150 ①	150 ①	N	150 ①	150 ①	150 ①	N	42	42	10	50	42	42	6	50	3	3	2	50
12	50	50	10	50	50	50	10	50	15	15	10	50	15	15	6	50	3	3	2	50
16	50	50	10	50	50	50	10	50	15	15	10	50	15	15	6	50	3	3	2	50
20	50	50	10	50	50	50	10	50	15	15	10	50	6	6	6	50	3	3	2	50
25	50	50	10	50	50	50	10	50	10	10	10	50	6	6	6	50	3	3	2	50
32	50	50	10	50	50	50	10	50	10	10	10	50	6	6	6	50	3	3	2	50
XTPR…DC1 with classification Type "1" and Type "2"																				
16	150 ①	150 ①	25	N	150 ①	150 ①	25	N	45	45	25	100	15	15		100	8	8	2.5	100
25	150 ①	150 ①	25	N	150 ①	150 ①	25	N	45	45	25	100	15	15		100	8	8	2.5	100
32	50	50	25	100	50	50	25	100	45	45	25	100	15	15		100	5	5	2.5	100
40	50	50	25	100	50	50	25	100	45	45	25	100	15	15		100	5	5	2.5	100
50	50	50	25	100	50	50	25	100	45	45	25	100	15	15		100	5	5	2.5	100
58	50	50	25	160	50	50	25	160	45	45	25	160	15	15		160	5	5	2.5	160
63	50	50	25	160	50	50	25	160	45	45	25	160	15	15		160	5	5	2.5	160
XTPR…BC1, XTPT, XTPM with Current Limiter XTPAXCL																				
0.16 – 1	①	①	①	N	①	①	①	N	①	①	①	N	①	①	①	N	①	①	20	N
1.6	①	①	①	N	①	①	①	N	①	①	①	N	①	①	①	N	①	①	20	N
2.5	①	①	①	N	①	①	①	N	①	①	①	N	①	①	①	N	20	20	20	N
4	①	①	①	N	①	①	①	N	①	①	①	N	①	①	①	N	20	20	20	N
6.3	①	①	①	N	①	①	①	N	①	①	①	N	①	①	50	N	20	20	20	N
10	①	①	①	N	①	①	①	N	①	①	①	N	①	①	20	N	20	20	20	N
12	①	①	①	N	①	①	①	N	①	①	①	N	①	①	20	N	5	5	2.5	N
16	①	①	①	N	①	①	①	N	①	①	①	N	①	①	20	N	5	5	2.5	N
20	①	①	①	N	①	①	①	N	①	①	①	N	10	10	10	N	5	5	2.5	N
25	①	①	①	N	①	①	①	N	①	①	①	N	10	10	10	N	5	5	2.5	N
32	①	①	①	N	①	①	①	N	①	①	①	N	10	10	10	N	5	5	2.5	N
XTPR…BC1, XTPT, XTPM with (2) Current Limiters XTPAXCL																				
0.16 – 1	①	①	①	N	①	①	①	N	①	①	①	N	①	①	①	N	①	①	20	N
1.6	①	①	①	N	①	①	①	N	①	①	①	N	①	①	①	N	①	①	20	N
2.5	①	①	①	N	①	①	①	N	①	①	①	N	①	①	①	N	40	40	20	N
4	①	①	①	N	①	①	①	N	①	①	①	N	①	①	①	N	40	40	20	N
6.3	①	①	①	N	①	①	①	N	①	①	①	N	①	①	50	N	20	20	20	N
10	①	①	①	N	①	①	①	N	①	①	①	N	①	①	40	N	20	20	20	N
12	①	①	①	N	①	①	①	N	①	①	①	N	①	①	40	N	10	10	2.5	N
16	①	①	①	N	①	①	①	N	①	①	①	N	①	①	40	N	10	10	2.5	N
20	①	①	①	N	①	①	①	N	①	①	①	N	20	20	20	N	10	10	2.5	N
25	①	①	①	N	①	①	①	N	①	①	①	N	20	20	20	N	10	10	2.5	N
32	①	①	①	N	①	①	①	N	①	①	①	N	20	20	20	N	10	10	2.5	N

① No upstream protective device required, as it is the auto-protected range (100/150 kA — Frame B, 150 kA — Frame D).
② N = Not required.
③ XTPR…BC1, XTPT, XTPM — Required back-up fuse if the short circuit current exceeds the rated conditional short circuit current ($I_{cc} > I_q$); XTPB, XTPR...DC1 — Fuse (A gG/gL) for enhancing the switching capacity of the motor protective circuit breaker to 100 kA.

Table 34-185. Ratings for Group Motor Applications — UL 508 / CSA C22.2 No. 14

Catalog Number	Rated Uninterrupted Current — I_u (Amps)	FLA Adjustment Range / Overload Release — I_r (Amps)	Short Circuit Release — I_{rm} (Amps)	Maximum Protective Device for UL/CSA Group Protection					
				Max. RMS Sym Current — 600V (kA)		Maximum Fuse Rating (A)		Circuit Breaker Max (A)	
					w/Current Limiter — XTPAXCL		w/Current Limiter — XTPAXCL		w/Current Limiter — XTPAXCL
XTPB — Frame B, Manual Motor Protector with Thermal and Magnetic Trip									
XTPBP16BC1	0.16	0.1 – 0.16	2.2	50	—	600	—	600	—
XTPBP25BC1	0.25	0.16 – 0.25	3.5	50	—	600	—	600	—
XTPBP40BC1	0.4	0.25 – 0.4	5.6	50	—	600	—	600	—
XTPBP63BC1	0.63	0.4 – 0.63	8.8	50	—	600	—	600	—
XTPB001BC1	1	0.63 – 1	14	50	—	600	—	600	—
XTPB1P6BC1	1.6	1 – 1.6	22	50	—	600	—	600	—
XTPB2P5BC1	2.5	1.6 – 2.5	35	50	—	600	—	600	—
XTPB004BC1	4	2.5 – 4	56	50	—	600	—	600	—
XTPB6P3BC1	6.3	4 – 6.3	88	50	—	600	—	600	—
XTPB010BC1	10	6.3 – 10	140	10	50	150	600	125 ②	600
XTPB012BC1	12	8 – 12	168	10	50	150	600	125 ②	600
XTPB016BC1	16	10 – 16	224	10 ①	50 ①	150 ①	600 ①	125 ①②	600 ①
XTPB020BC1 ③	20	16 – 20	280	10 ①	18 ①	150 ①	600 ①	125 ①	600 ①
XTPB025BC1 ③	25	20 – 25	350	10 ①	18 ①	150 ①	600 ①	125 ①	600 ①
XTPR — Frame B (all Screw and Spring Cage terminal options), Manual Motor Protector with Thermal and Magnetic Trip									
XTPRP16BC1	0.16	0.1 – 0.16	2.2	50	—	600	—	600	—
XTPRP25BC1	0.25	0.16 – 0.25	3.5	50	—	600	—	600	—
XTPRP40BC1	0.4	0.25 – 0.4	5.6	50	—	600	—	600	—
XTPRP63BC1	0.63	0.4 – 0.63	8.8	50	—	600	—	600	—
XTPR001BC1	1	0.63 – 1	14	50	—	600	—	600	—
XTPR1P6BC1	1.6	1 – 1.6	22	50	—	600	—	600	—
XTPR2P5BC1	2.5	1.6 – 2.5	35	50	—	600	—	600	—
XTPR004BC1	4	2.5 – 4	56	50	—	600	—	600	—
XTPR6P3BC1	6.3	4 – 6.3	88	50	—	600	—	600	—
XTPR010BC1	10	6.3 – 10	140	10	50	150	600	125 ②	600
XTPR012BC1	12	8 – 12	168	10	50	150	600	125	600
XTPR016BC1	16	10 – 16	224	10	50	150	600	125 ②	600
XTPR020BC1	20	16 – 20	280	10	18	150	600	125	600
XTPR025BC1	25	20 – 25	350	10	18	150	600	125	600
XTPR032BC1	32	25 – 32	448	10	18	150	600	125	600
XTPR — Frame D, Manual Motor Protector with Thermal and Magnetic Trip									
XTPR016DC1	16	10 – 16	224	10	—	600	—	600	—
XTPR025DC1	25	16 – 25	350	10	—	600	—	600	—
XTPR032DC1	32	25 – 32	448	10	—	600	—	600	—
XTPR040DC1	40	32 – 40	560	10	—	600	—	600	—
XTPR050DC1	50	40 – 50	700	10 ①	—	600 ①	—	600 ①	—
XTPR058DC1	58	50 – 58	812	10 ①	—	600 ①	—	600 ①	—
XTPR063DC1	65	55 – 63	882	10 ①	—	600 ①	—	600 ①	—
XTPT — Frame D, Manual Motor Protector with Thermal and Magnetic Trip									
XTPTP16BC1	0.16	0.1 – 0.16	2.4	50	—	600	—	600	—
XTPTP25BC1	0.25	0.16 – 0.25	4.25	50	—	600	—	600	—
XTPTP40BC1	0.4	0.25 – 0.4	6.8	50	—	600	—	600	—
XTPTP63BC1	0.63	0.4 – 0.63	12	50	—	600	—	600	—
XTPT001BC1	1	0.63 – 1	20	50	—	600	—	600	—
XTPT1P6BC1	1.6	1 – 1.6	32	50	—	600	—	600	—
XTPT2P5BC1	2.5	1.6 – 2.5	50	50	—	600	—	600	—
XTPT004BC1	4	2.5 – 4	84	50	—	600	—	600	—
XTPT6P3BC1	6.3	4 – 6.3	141	50	—	600	—	600	—
XTPT010BC1	10	6.3 – 10	224	10	50	150	600	125 ②	600
XTPT012BC1	12	8 – 12	224	10	50	150	600	125	600
XTPT016BC1	16	10 – 16	358	10	50	150	600	125	600
XTPT020BC1	20	16 – 20	380	10	18	150	600	125	600
XTPT025BC1	25	20 – 25	420	10	18	150	600	125	600

① Rating is pending UL approval. Contact Eaton for availability.
② 22kA 600V AC
③ IEC/EN 60947-4-1

Table 34-186. UL 508 Type E Ratings

Manual Motor Protector — Screw Terminals	Line Side Adapter	FLA Adjustment Range / Overload Release — I_r (Amps)	Short-Circuit Release — I_{rm} (Amps)	UL508 Type E Application				
				Max. RMS Symmetrical Short-Circuit Ratings (kA)			Maximum Upstream Protective Device (A) ①	
Catalog Number	Catalog Number			240V	480/277V	600/347V	Maximum Fuse 600V	Maximum Circuit Breaker 600V
XTPR Frame B + XTPAXLSA								
XTPRP16BB1	**XTPAXLSA**	0.1 – 0.16	2.2	50	50	50	Not Required	Not Required
XTPRP16BC1	**XTPAXLSA**	0.16 – 0.25	3.5	50	50	50	Not Required	Not Required
XTPRP25BC1	**XTPAXLSA**	0.25 – 0.4	5.6	50	50	50	Not Required	Not Required
XTPRP40BC1	**XTPAXLSA**	0.4 – 0.63	8.82	50	50	50	Not Required	Not Required
XTPRP63BC1	**XTPAXLSA**	0.63 – 1	14	50	50	50	Not Required	Not Required
XTPR001BC1	**XTPAXLSA**	1 – 1.6	22.4	50	50	50	Not Required	Not Required
XTPR1P6BC1	**XTPAXLSA**	1.6 – 2.5	35	50	50	50	Not Required	Not Required
XTPR2P5BC1	**XTPAXLSA**	2.5 – 4	56	50	50	50	Not Required	Not Required
XTPR004BC1	**XTPAXLSA**	4 – 6.3	88.2	50	50	50	Not Required	Not Required
XTPR6P3BC1	**XTPAXLSA**	6.3 – 10	140	50	50	50	Not Required	Not Required
XTPR010BC1	**XTPAXLSA**	8 – 12	168	42	42	—	Not Required	Not Required
XTPR012BC1	**XTPAXLSA**	10 – 16	224	42	42	—	Not Required	Not Required
XTPR016BC1	**XTPAXLSA**	10 – 16	224	18	18	—	Not Required	Not Required
XTPR020BC1	**XTPAXLSA**	16 – 20	280	18	18	—	Not Required	Not Required
XTPR025BC1	**XTPAXLSA**	20 – 25	350	18	18	—	Not Required	Not Required
XTPR032BC1	**XTPAXLSA**	25 – 32	448	18	18	—	Not Required	Not Required
XTPR Frame D + XTPAXLSAD								
XTPR016DC1	**XTPAXLSAD**	10 – 16	224	50	50	50	Not Required	Not Required
XTPR025DC1	**XTPAXLSAD**	16 – 25	350	50	50	50	Not Required	Not Required
XTPR032DC1	**XTPAXLSAD**	25 – 32	448	50	50	50	Not Required	Not Required
XTPR040DC1	**XTPAXLSAD**	32 – 40	560	50	50	50	Not Required	Not Required
XTPR050DC1	**XTPAXLSAD**	40 – 50	700	65	65	—	Not Required	Not Required
XTPR058DC1	**XTPAXLSAD**	50 – 58	812	65	65	—	Not Required	Not Required
XTPR063DC1	**XTPAXLSAD**	55 – 65	882	65	65	—	Not Required	Not Required

① For UL 508 Type E applications, the Manual Motor Protector assembly does not require a dedicated upstream protective device in the panel, thus a maximum rating is not required.

34

Dimensions

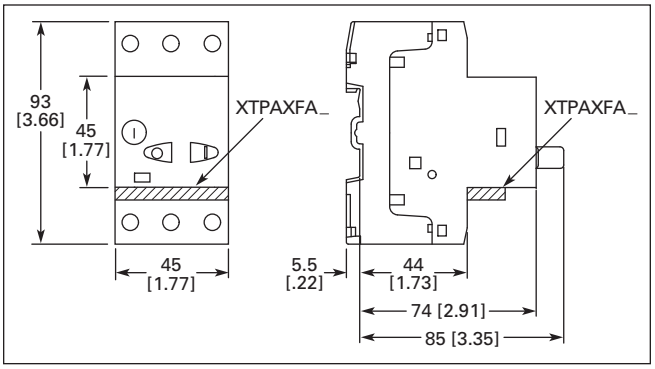

Figure 34-110. Manual Motor Protectors — XTPB (Approximate Dimensions in mm [in])

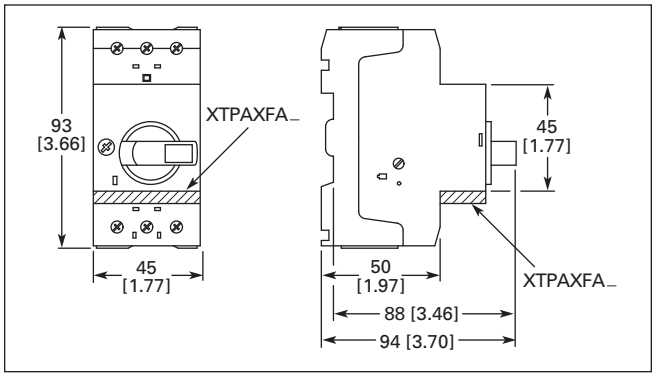

Figure 34-111. Manual Motor Protectors, Manual Transformer Protectors — XTPR…B, XTPT and XTPM (Approximate Dimensions in mm [in])

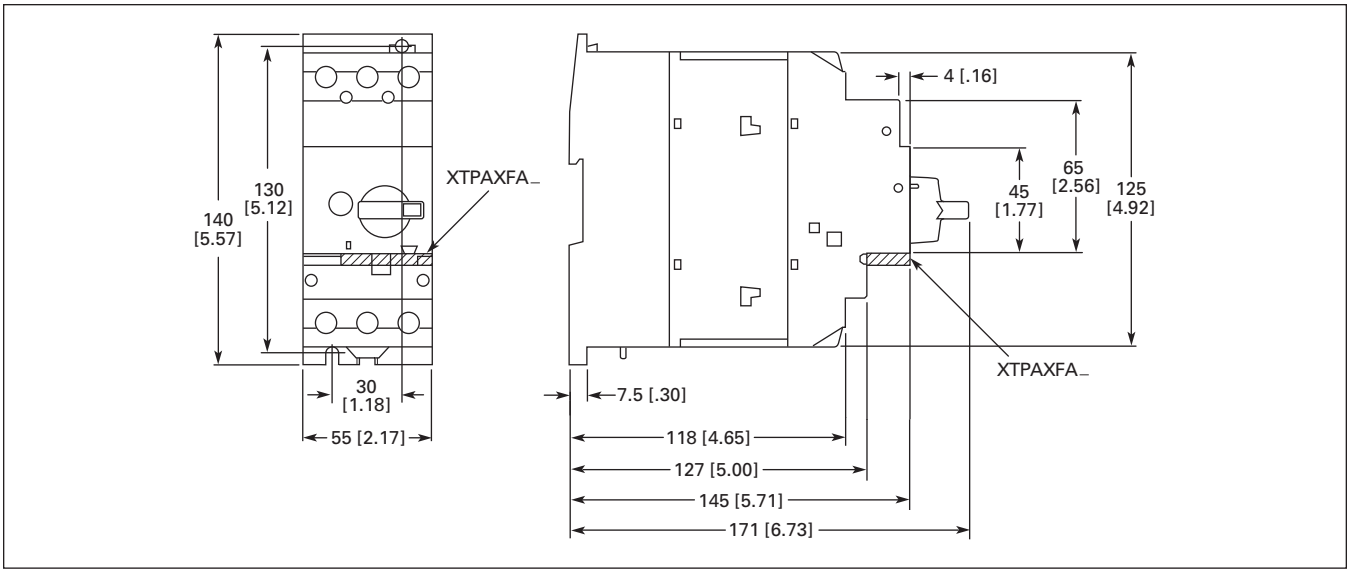

Figure 34-112. Manual Motor Protector — XTPR…DC1 (Approximate Dimensions in mm [in])

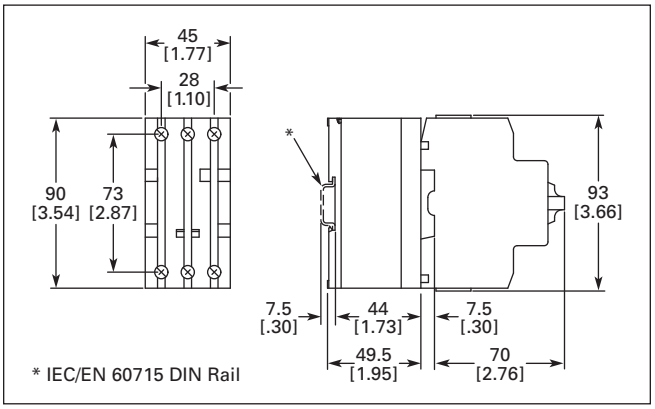

Figure 34-113. Current Limiter — XTPAXCL (Approximate Dimensions in mm [in])

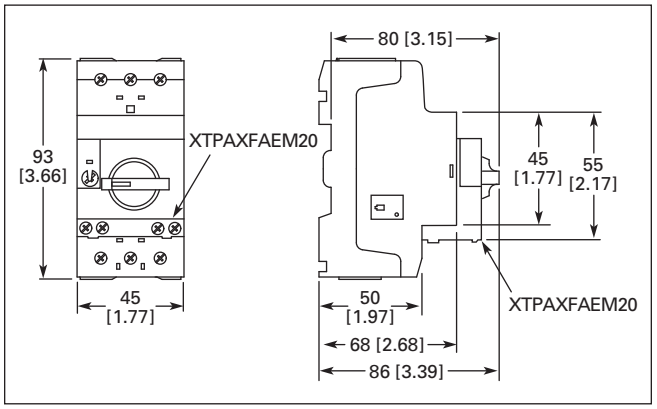

Figure 34-114. MMPs with Early-Make Auxiliary Contacts — XTPR…BC1 + XTPAXFAEM20 (Approximate Dimensions in mm [in])

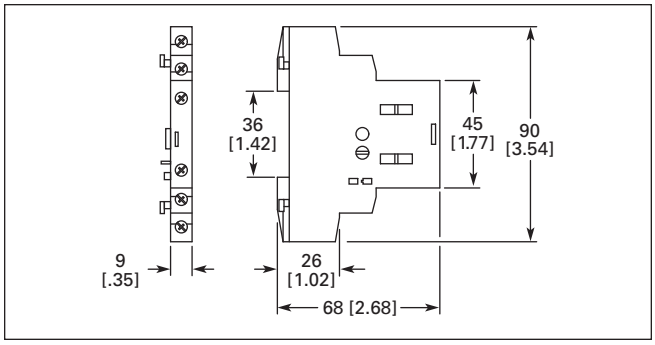

Figure 34-115. Standard Auxiliary Contact — XTPAXSA… (Approximate Dimensions in mm [in])

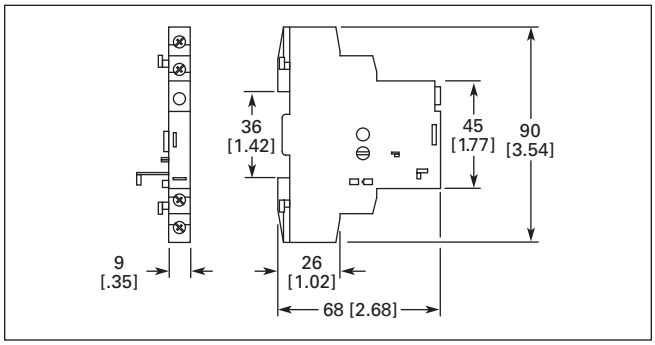

Figure 34-116. Trip Indicating Auxiliary Contact — XTPAXSATR… (Approximate Dimensions in mm [in])

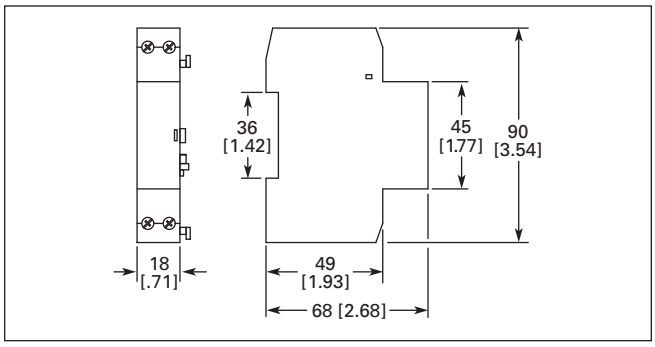

Figure 34-117. Undervoltage / Shunt Release — XTPAXUVR…, XTPAXSR… (Approximate Dimensions in mm [in])

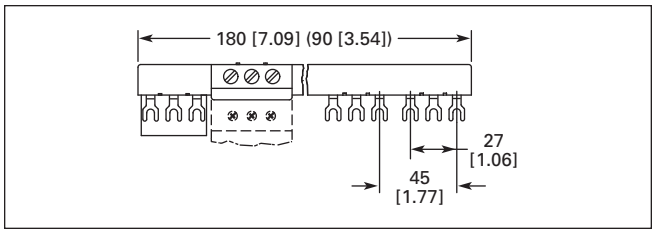

Figure 34-118. Three-Phase Commoning Link — XTPAXCLKA4, XTPAXCLKA2 (Approximate Dimensions in mm [in])

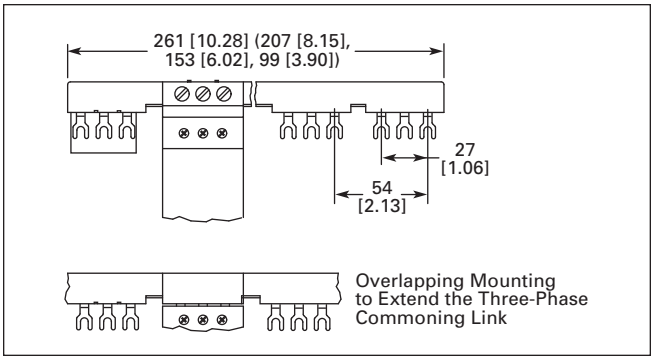

Figure 34-119. Three-Phase Commoning Link — XTPAXCLKB5, XTPAXCLKB4, XTPAXCLKB3, and XTPAXCLKB2 (Approximate Dimensions in mm [in])

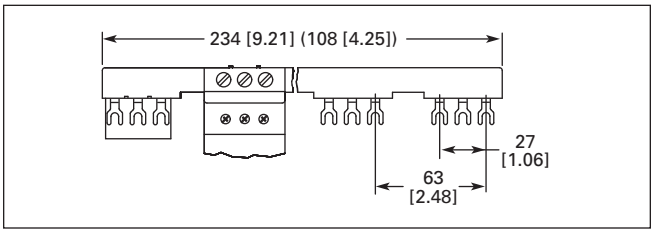

Figure 34-120. Three-Phase Commoning Link — XTPAXCLKC4, XTPAXCLKC2 (Approximate Dimensions in mm [in])

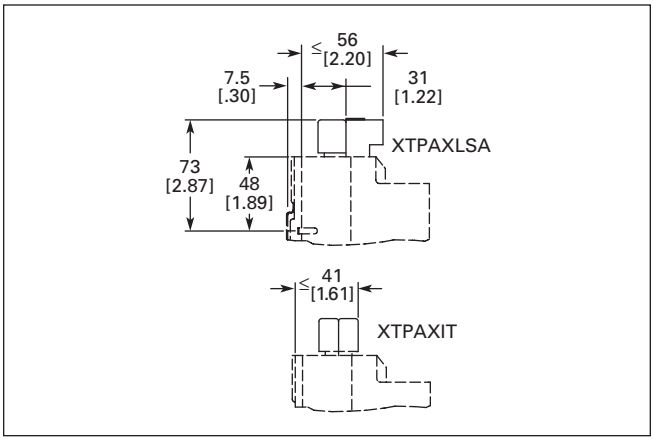

Figure 34-121. Incoming Terminal, Line Side Adapter — XTPAXIT, XTPAXLSA (Approximate Dimensions in mm [in])

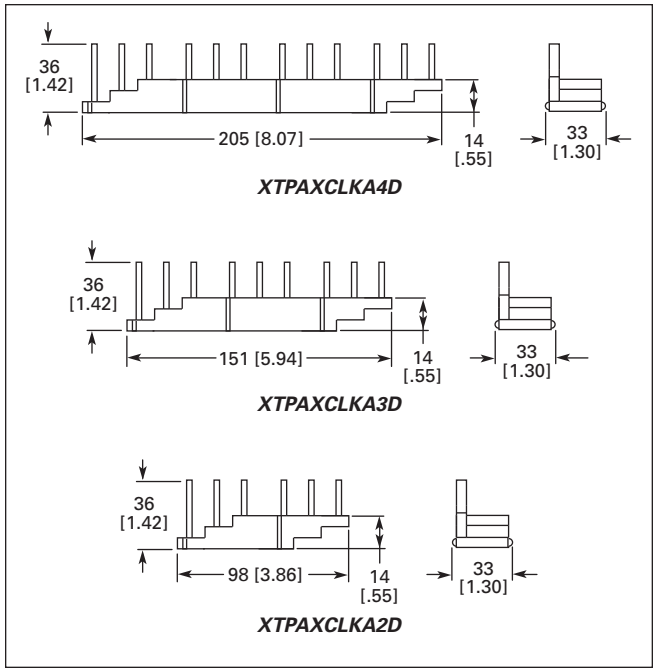

Figure 34-122. Three-Phase Commoning Link — XTPAXCLKA4D, XTPAXCLKA3D and XTPAXCLKA2D (Approximate Dimensions in mm [in])

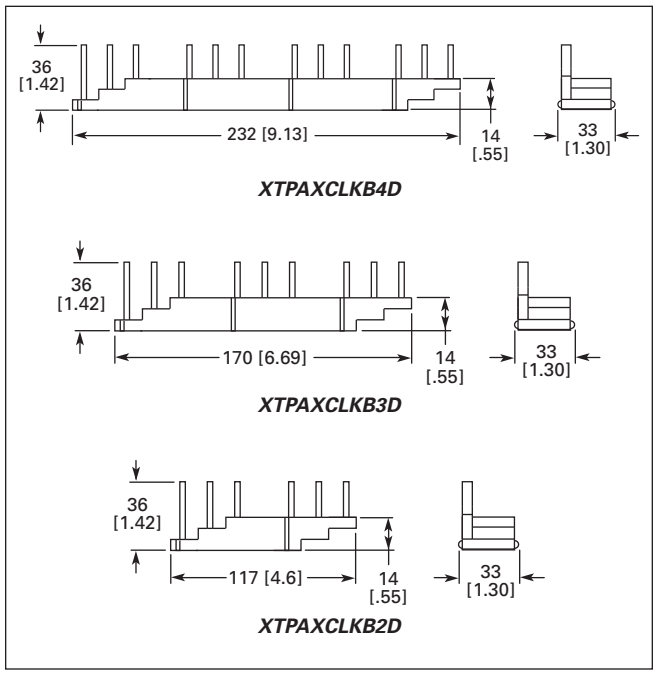

Figure 34-123. Three-Phase Commoning Link — XTPAXCLKB4D, XTPAXCLKB3D and XTPAXCLKB2D (Approximate Dimensions in mm [in])

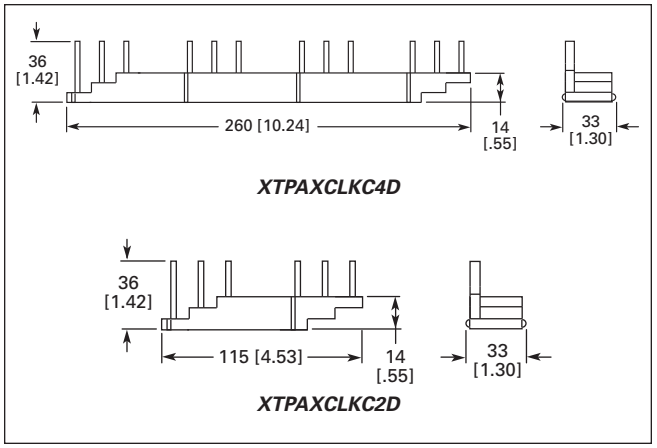

Figure 34-124. Three-Phase Commoning Link — XTPAXCLKC4D and XTPAXCLKC2D (Approximate Dimensions in mm [in])

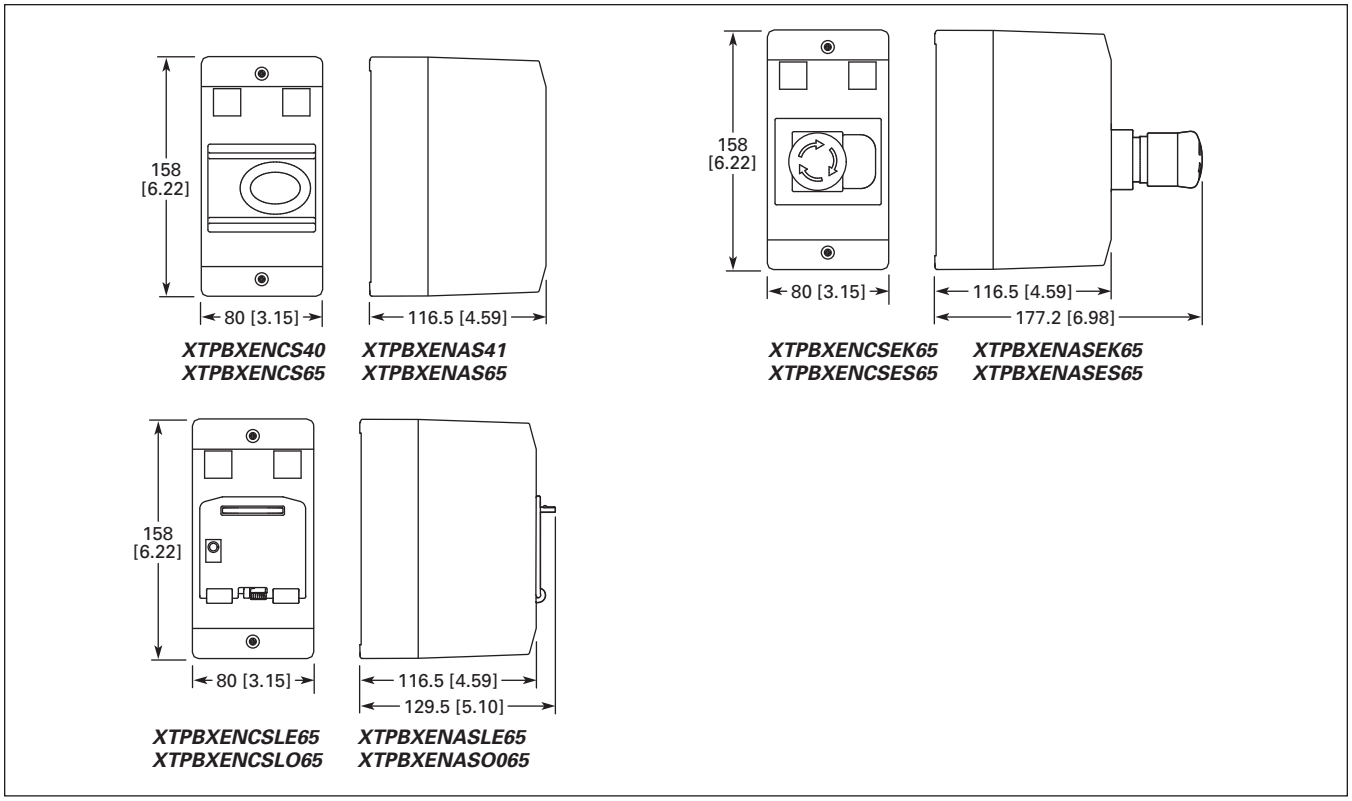

Figure 34-125. Insulated Enclosures for Surface Mounting of XTPB Manual Motor Protectors (Approximate Dimensions in mm [in])

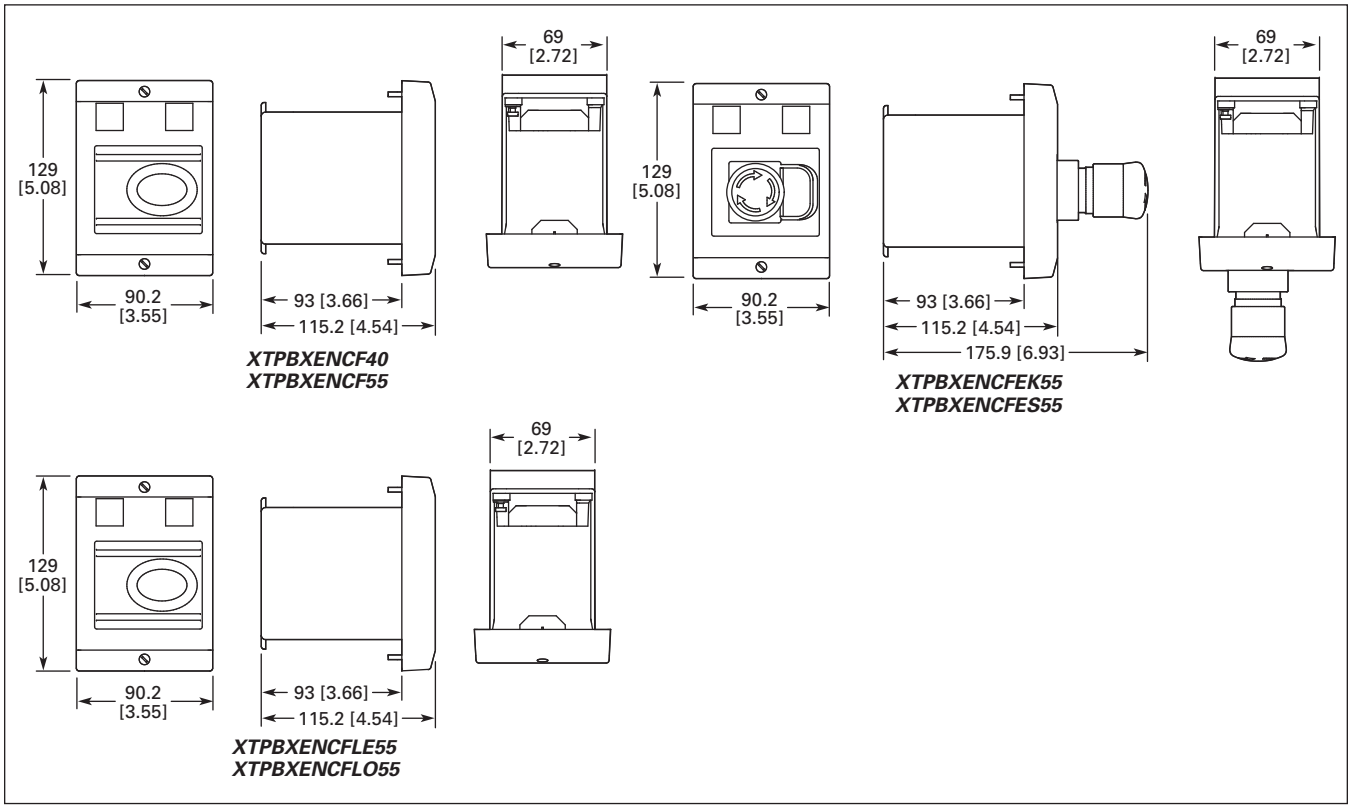

Figure 34-126. Insulated Enclosures for Flush Mounting of XTPB Manual Motor Protectors (Approximate Dimensions in mm [in])

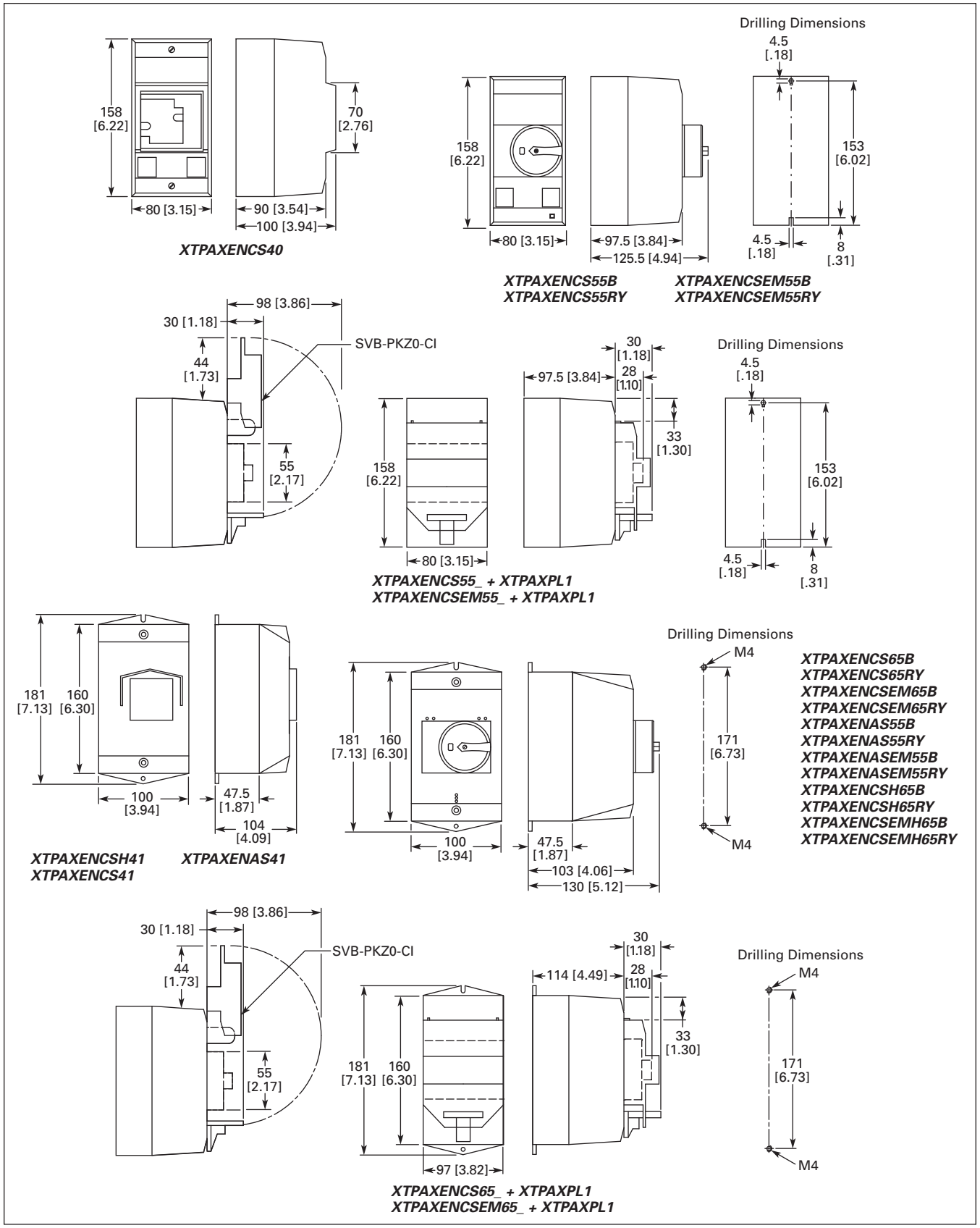

Figure 34-127. Insulated Enclosures for Surface Mounting of XTPR...B Manual Motor Protectors (Approximate Dimensions in mm [in])

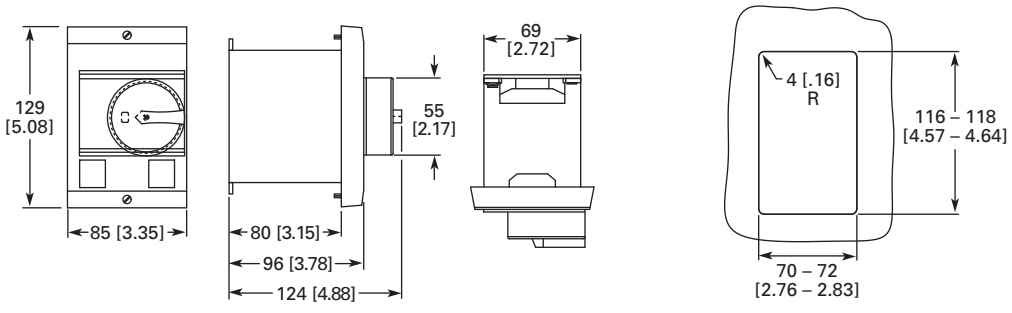

XTPAXENCF40
XTPAXENCF55B
XTPAXENCF55RY

Mounting Cutout XTPAXENCF..

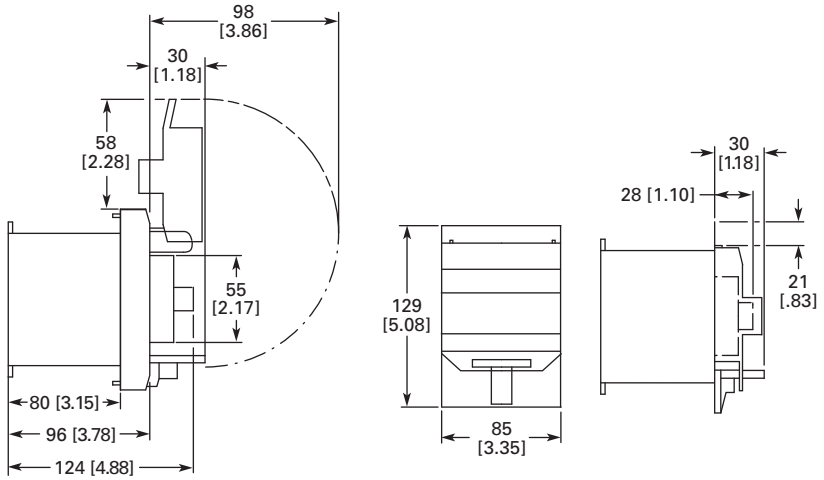

XTPAXENCF55_ + XTPAXPL3

Figure 34-128. Insulated Enclosures for Flush Mounting of XTPR...B Manual Motor Protectors (Approximate Dimensions in mm [in])

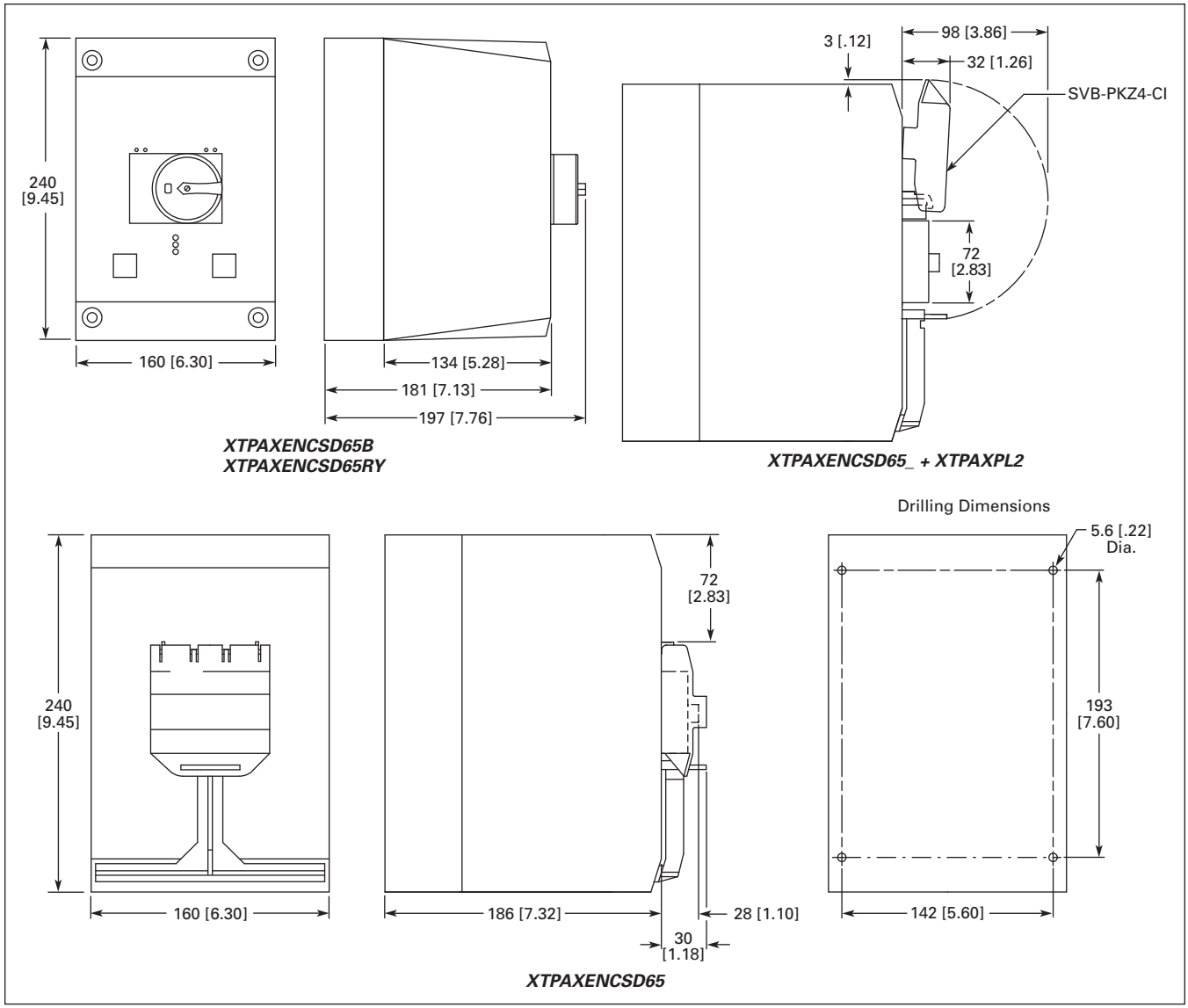

Figure 34-129. Insulated Enclosures for Surface Mounting of XTPR...D Manual Motor Protectors (Approximate Dimensions in mm [in])

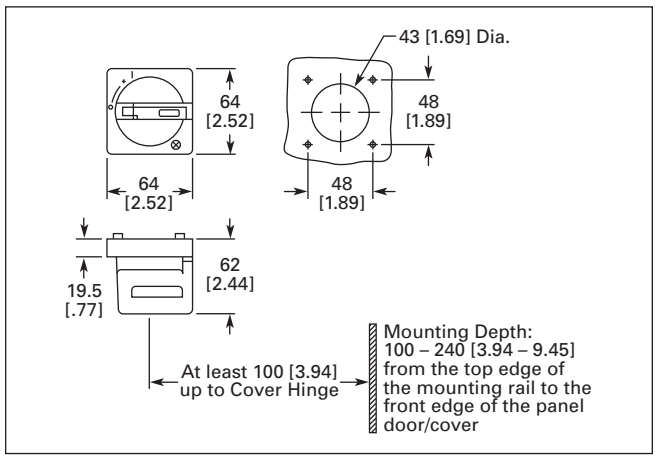

**Figure 34-130. Rotary Handle Mechanism — XTPAXRHM...
(Approximate Dimensions in mm [in])**

Contents

Description	*Page*
Standards and Certifications	**34-158**
Catalog Number Selection	**34-159**
Product Selection	**34-160**
Accessories	**34-162**
Technical Data and Specifications	**34-165**
Dimensions	**34-169**
Reference Data	**34-210**



XT Combination Motor Controller and Manual Motor Controller

Product Description

The new Cutler-Hammer® ***XT*** IEC Open Non-reversing and Reversing Manual Motor Controllers from Eaton's electrical business combine a Manual Motor Protector with an IEC Contactor(s) to provide a complete motor protection solution by combining motor disconnect function, thermal overload protection, magnetic short circuit protection and remote control operation in one compact, assembled unit. These assembled Manual Motor Controllers cover motors with FLA ratings from 0.10A to 63A.

The UL 508 Type F labeled Combination Motor Controller (CMC) includes a Line Side Adapter (LSA). These assembled Combination Motor Controllers cover motors with FLA ratings from 0.10A to 52A.

Application Description

The ***XT*** IEC Non-reversing and Reversing Manual and Combination Motor Controllers can be used in the following applications:

XTSC and XTSR

- Manual Motor Controller for Single and Multi Motor Panels — The preassembled ***XT*** Manual Motor Controllers (MMC) combine a Manual Motor Protector, a Wiring Connector Link and IEC Contactor. MMCs can also be field installed with separate MMP, WCL and Contactor(s). An IEC magnetic contactor has been added to allow for remote operation of the motor circuit.

XTFC and XTFR

- Combination Motor Controller (UL 508, Type F), for Single and Multi Motor Panels — The preassembled IEC Combination Motor Controllers combine a Line Side Adapter, Manual Motor Protector, Wiring Connector Link and IEC Contactor. The XTPR Manual Motor Protectors are UL listed as UL 508, Type E Self-Protected Manual Combination Starters. This UL listing allows these devices to be used in motor circuits without having to add separate branch short circuit protection. An IEC magnetic contactor has been added to allow for remote operation of the motor circuit.
- Group Motor Installations — Since the Manual Motor Protectors (Manual Combination Starters) are UL listed for Group Motor Installations, the IEC Manual Motor Controllers provide a compact, assembled package for Group Motor Installations up to 600V.

For Group Installations (in-panel SCPD) applying the traditional 1/3 tap rule, the Manual Motor Protectors and Combination Motor Controllers may be used on 480V Delta systems along with 480Y/277V and 600Y/347V slash rated Wye systems. For Group Installations, applying the more recent 1/10 tap conductor rule, a maximum 240V Delta is permitted or 480Y/277V and 600Y/347V slash rated Wye systems.

For actual UL 508 Type E/F applications (out-of-panel upstream feeder Short-Circuit Protective Device [SCPD] only), a maximum 240V Delta is permitted or 480Y/277V and 600Y/347V slash rated Wye systems.

For Manual "At Motor" Disconnect applications, a maximum 240V Delta is permitted or 480Y/277V and 600Y/347V slash rated Wye systems.

Features

- ON/OFF rotary handle with lockout provision
- Visible trip indication
- Test trip function
- Motor applications from 0.10A to 63A
- Class 10 overload protection
- Built-in heater and magnetic trip elements to protect the motor
- Phase loss sensitivity
- Type 2 coordination
- Ambient compensated up to 55°C [140°F]
- Control inputs located at front of starter for easy access and wiring
- Wide range of coils
- DIN Rail mount — XTSC…BB_
- Mounting plates — XTSC…BC_, XTSC…D motor controllers
- Adjustment dial for setting motor FLA
- Short circuit trip at 14 times the maximum setting of the FLA adjustment dial
- UL 508 Type F CMC High Fault Short Circuit Ratings: Refer to **Table 34-198**.
- 1NO-1NC Auxiliary Contact as standard on Manual Motor Controller and Combination Motor Controller

Standards and Certifications

UL 508 Type F Combination Motor Controller

- IEC Type 2 Approved per IEC 60947-4-1
- UL Listed File No. E245398
- CE Mark

Note: For Type 2 Coordination of MMCs, see **Tables 34-249** through **34-251** on **Pages 34-210** and **34-211**.

Protection in Different Controller Types

A UL 508 Type E Self-protected Manual Combination Starter/Motor Controller consists of a single device having integral short circuit protection, a main set of contacts, motor overload protection, and may also include a UL listed Line Side Adapter (see **Table 34-187**). This type of controller is a legitimate short circuit protective device and disconnect means for the downstream motor. It does require an upstream feeder short circuit protective device, but does not require a dedicated branch circuit protection or a disconnect means if used with a Line Side Adapter. A UL 508 Type E rating means that the unit clears a fault and does not experience any welding of the power poles. A UL 508 Type E self-protected manual motor controller will remain fully functional should a short circuit within its ratings occur. *E.g.* XTPR.

*An **XT** UL 508 Type F Self-protected Combination Motor Controller* consists of a UL Listed Type E Self-protected Manual Combination Starter/Motor Controller, a UL Listed Contactor, and a UL Listed Line Side Adapter (see **Table 34-187**). While the UL 508 Type E self-protected manual motor protector of this combination motor controller device is a legitimate short circuit protective device and disconnect means for the downstream motor, the contactor is *not* "self-protected." *E.g.* XTFC, XTFR.

In addition, as a complete assembly or modular components, the device should have Type 2 Coordination certification. Type 2 Coordination means the Starter or the Controller must exhibit little or no damage following a major short circuit fault and should be able to be returned to proper service without replacing any parts.

Table 34-187. MMC and CMC Applications

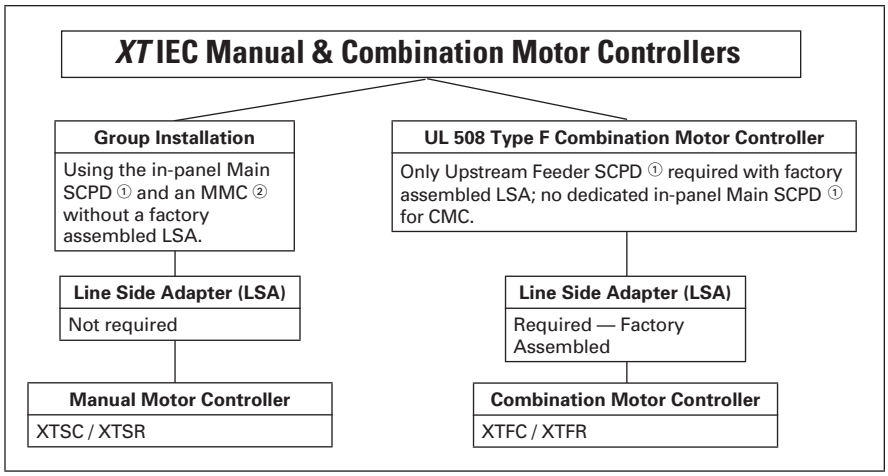

① SCPD = Short Circuit Protective Device (Circuit Breaker, Fuses).
② MMC = Manual Motor Controller
Reference: Technical Paper AP03402001E.

Note: Line Side Adapters are not required for non-U.S. applications. Most countries outside of the U.S. classify the MMP as a thermal magnetic circuit breaker.

Catalog Number Selection

Table 34-188. Combination Motor Controllers — Catalog Numbering System

XT **SC** **012** **B** **B** **A**

Design
XT = ***XT*** IEC Power Control

Type
SC = Manual Motor Controller — FVNR
SR = Manual Motor Controller — FVR
FC = Combination Motor Controller, UL 508 Type F — FVNR
FR = Combination Motor Controller, UL 508 Type F — FVR

Rated Current of MMP	
B-Frame	**D-Frame**
P16 = 0.16A	**016** = 16A
P25 = 0.25A	**025** = 25A
P40 = 0.40A	**032** = 32A
P63 = 0.63A	**040** = 40A
001 = 1A	**050** = 50A
1P6 = 1.6A	**058** = 58A
2P5 = 2.5A	**063** = 65A
004 = 4A	
6P3 = 6.3A	
010 = 10A	
012 = 12A	
016 = 16A	
020 = 20A	
025 = 25A	
032 = 32A	

Coil Voltage
A = 110V 50 Hz, 120V 60 Hz
B = 220V 50 Hz, 240V 60 Hz
C = 415V 50 Hz, 480V 60 Hz
D = 550V 50 Hz, 600V 60 Hz
E = 208V 50 Hz
F = 230V 50 Hz
G = 190V 50 Hz, 220V 60 Hz
H = 240V 50 Hz, 277V 60 Hz
L = 380V 50 Hz, 440V 60 Hz
N = 400V 50 Hz
P = 380V 60 Hz
R = 12V 50/60 Hz
T = 24V 50/60 Hz
U = 24V 50 Hz
W = 42V 50 Hz, 48V 60 Hz
Y = 48V 50 Hz
AD = 120V DC
BD = 220V DC
RD = 12V DC
TD = 24V DC
WD = 48V DC

Frame Size — Contactor
B = 45 mm, 7 to 15A
C = 45 mm, 18 to 32A
D = 55 mm, 40 to 65A

Frame Size — MMP
B = 45 mm, 0.1 to 32A
D = 55 mm, 16 to 63A



XTSC FVNR
Frame B MMP
& Frame B Contactor



XTSC FVNR
Frame B MMP
& Frame C Contactor



XTSC FVNR
Frame D MMP
& Frame C Contactor



XTSC FVNR
Frame D MMP
& Frame D Contactor



XTSR FVR
Frame B MMP
& (2) Frame B Contactors



XTSR FVR
Frame B MMP
& (2) Frame C Contactors



XTSR FVR
Frame D MMP
& (2) Frame C Contactors



XTSR FVR
Frame D MMP
& (2) Frame D Contactors

Product Selection

Table 34-189. XTSC and XTSR Manual Motor Controllers (MMC) / Starter Combinations

Factory Assembled Motor Protective Device with Thermal and Magnetic Trip + Contactor															
FLA Adjustment Range / Overload Release — I_r (Amps)	Short-Circuit Release — I_{rm} (Amps)	Maximum Motor Ratings — P ①								Assembled Manual Motor Controller ③					
		Maximum Motor kW Rating AC-3 — P (kW)				Maximum hp Rating — P (hp)									
		Three-Phase				Three-Phase				Non-reversing			Reversing		
		220 – 240V	380 – 415V	500V	660 – 690V	200V	240V	480V	600V	Catalog Number	Price U.S. $ AC Coil	Price U.S. $ DC Coil	Catalog Number	Price U.S. $ AC Coil	Price U.S. $ DC Coil
Frame B MMP + Frame B Contactor															
0.1 – 0.16	3.2	—	—	—	0.06	②	②	1/2	1/2	**XTSCP16BB_**			**XTSRP16BB_**		
0.16 – 0.25	3.5	—	0.06	0.06	0.12	②	②	1/2	1/2	**XTSCP25BB_**			**XTSRP25BB_**		
0.25 – 0.4	5.6	0.06	0.09	0.12	0.18	②	②	1/2	1/2	**XTSCP40BB_**			**XTSRP40BB_**		
0.4 – 0.63	8.82	0.09	0.18	0.25	0.25	②	②	1/2	1/2	**XTSCP63BB_**			**XTSRP63BB_**		
0.63 – 1	14	0.12	0.25	0.37	0.55	②	②	1/2	1/2	**XTSC001BB_**			**XTSR001BB_**		
1 – 1.6	22.4	0.25	0.55	0.75	1.1	②	②	3/4	1	**XTSC1P6BB_**			**XTSR1P6BB_**		
1.6 – 2.5	35	0.37	0.75	1.1	1.5	1/2	1/2	1	1-1/2	**XTSC2P5BB_**			**XTSR2P5BB_**		
2.5 – 4	56	0.75	1.5	2.2	3	1	1	2	3	**XTSC004BB_**			**XTSR004BB_**		
4 – 6.3	88.2	1.1	2.2	3	4	1-1/2	1-1/2	3	5	**XTSC6P3BB_**			**XTSR6P3BB_**		
6.3 – 10	140	2.2	4	4	7.5	3	3	7-1/2	10	**XTSC010BB_**			**XTSR010BB_**		
8 – 12	168	3	5.5	5.5	11	3	3	7-1/2	10	**XTSC012BB_**			**XTSR012BB_**		
10 – 16	224	4	7.5	9	12.5	3	3	10	10	**XTSC016BB_**			—		
Frame B MMP + Frame C Contactor															
10 – 16	224	4	7.5	9	12.5	3	3	10	10	**XTSC016BC_**			**XTSR016BC_**		
16 – 20	280	5.5	9	12.5	15	5	5	10	15	**XTSC020BC_**			**XTSR020BC_**		
20 – 25	350	5.5	11	15	22	5	7-1/2	15	20	**XTSC025BC_**			**XTSR025BC_**		
25 – 32	448	7.5	15	22	30	7-1/2	10	20	25	**XTSC032BC_**			**XTSR032BC_**		
Frame D MMP + Frame C Contactor															
10 – 16	224	4	7.5	9	12.5	3	5	10	15	**XTSC016DC_**			**XTSR016DC_**		
16 – 25	350	5.5	12.5	12.5	22	7-1/2	7-1/2	20	25	**XTSC025DC_**			**XTSR025DC_**		
25 – 32	448	7.5	15	17.5	22	10	10	25	30	**XTSC032DC_**			**XTSR032DC_**		
Frame D MMP + Frame D Contactor															
32 – 40	560	11	20	22	30	10	—	30	30	**XTSC040DD_**			**XTSR040DD_**		
40 – 50	700	14	25	30	45	15	15	30	40	**XTSC050DD_**			**XTSR050DD_**		
50 – 58	812	17	30	37	55	—	—	40	—	**XTSC058DD_**			**XTSR058DD_**		
55 – 65	882	18.5	34	37	55	—	—	40	—	**XTSC063DD_**			**XTSR063DD_**		

① Select Manual Motor Protectors by full load amperes. Maximum Motor Ratings (kW, hp) are for reference only. For additional voltages not listed, see **Table 34-194** on **Page 34-165**.

② In this range, calculate motor rating according to rated current. Specified values to NEC 430.6(A)(1).

③ Underscore (_) indicates Magnetic Coil Suffix required. See **Table 34-191** on **Page 34-162**.

Notes:

The assembled Manual Motor Controller (MMC) consists of an XTPR Manual Motor Protector (MMP) and an XTCE contactor. For Frame B MMP + Frame B Contactor assemblies, the XTSC and XTSR can be mounted directly on DIN rail without an adapter. The contactors are supported mechanically with a mechanical connection element (included in XTPAXTPCB, XTPAXRPCRB). For 16A and above, the assembly is mounted via a DIN Rail Adapter Plate (XTPAXTPCPC, XTPAXTPCPD) and the electrical connection is made with electrical contact modules (XTPAXECMC, XTPAXECMD), both included in XTPAXTPCC and XTPAXTPCD. For detailed component lists, see **Table 34-195**, **Page 34-166**.

Service Factor Settings: Setting I_r of current scale in dependence of load factor:

SF = 1.15 → $I_r = 1 \times I_{n\ mot}$

SF = 1 → $I_r = 0.9 \times I_{n\ mot}$

Single-phasing sensitivity to IEC/EN 60947-4-1, VDE 0660 Part 102.

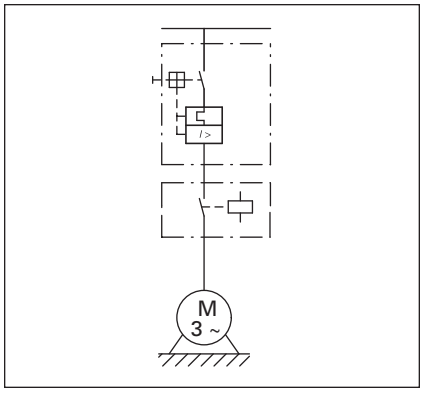

Figure 34-131. XTSC Manual Motor Controller

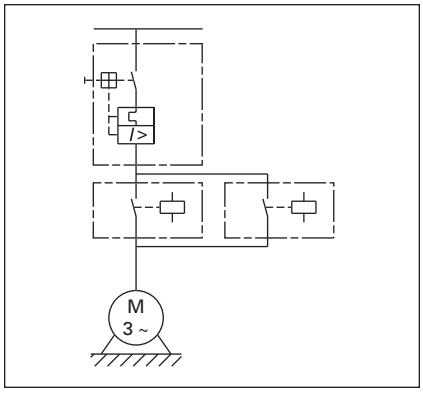

Figure 34-132. XTSR Manual Motor Controller

Accessories ..... **Page 34-130**
Technical Data ..... **Page 34-165**
Discount Symbol **1CD7**

Table 34-190. XTFC and XTFR Combination Motor Controllers (CMC), UL508 Type F

Factory Assembled Motor Protective Device with Thermal and Magnetic Trip + Contactor + Required Line Side Adapter															
FLA Adjustment Range / Overload Release — I_r (Amps)	Short-Circuit Release — I_{rm} (Amps)	Maximum Motor Ratings ①								Assembled Combination Motor Controller ③					
		Maximum Motor kW Rating AC-3 — P (kW)				Maximum hp Rating — P (hp)									
		Three-Phase				Three-Phase				Non-reversing			Reversing		
		220 – 240V	380 – 415V	500V	660 – 690V	200V	240V	480V	600V	Catalog Number	Price U.S. $ AC Coil	Price U.S. $ DC Coil	Catalog Number	Price U.S. $ AC Coil	Price U.S. $ DC Coil
Frame B MMP + Frame B Contactor															
0.1 – 0.16	2.2	—	—	—	0.06	②	②	1/2	1/2	**XTFCP16BB_**			**XTFRP16BB_**		
0.16 – 0.25	3.5	—	0.06	0.06	0.12	②	②	1/2	1/2	**XTFCP25BB_**			**XTFRP25BB_**		
0.25 – 0.4	5.6	0.06	0.09	0.12	0.18	②	②	1/2	1/2	**XTFCP40BB_**			**XTFRP40BB_**		
0.4 – 0.63	8.82	0.09	0.18	0.25	0.25	②	②	1/2	1/2	**XTFCP63BB_**			**XTFRP63BB_**		
0.63 – 1	14	0.12	0.25	0.37	0.55	②	②	1/2	1/2	**XTFC001BB_**			**XTFR001BB_**		
1 – 1.6	22.4	0.25	0.55	0.75	1.1	②	②	3/4	1	**XTFC1P6BB_**			**XTFR1P6BB_**		
1.6 – 2.5	35	0.37	0.75	1.1	1.5	1/2	1/2	1	1-1/2	**XTFC2P5BB_**			**XTFR2P5BB_**		
2.5 – 4	56	0.75	1.5	2.2	3	1	1	2	3	**XTFC004BB_**			**XTFR004BB_**		
4 – 6.3	88.2	1.1	2.2	3	4	1-1/2	1-1/2	3	5	**XTFC6P3BB_**			**XTFR6P3BB_**		
6.3 – 10	140	2.2	4	4	7.5	3	3	7-1/2	10	**XTFC010BB_**			**XTFR010BB_**		
8 – 12	168	3	5.5	5.5	11	3	3	7-1/2	—	**XTFC012BB_**			**XTFR012BB_**		
10 – 16	224	4	7.5	9	12.5	3	5	10	—	**XTFC016BB_**			**—**		
Frame B MMP + Frame C Contactor															
10 – 16	224	4	7.5	9	12.5	3	5	10	—	**XTFC016BC_**			**XTFR016BC_**		
16 – 20	280	5.5	9	12.5	15	5	5	—	—	**XTFC020BC_**			**XTFR020BC_**		
20 – 25	350	5.5	11	15	22	5	7-1/2	15	—	**XTFC025BC_**			**XTFR025BC_**		
25 – 32	448	7.5	15	22	30	7-1/2	10	20	—	**XTFC032BC_**			**XTFR032BC_**		
Frame D MMP + Frame C Contactor															
10 – 16	224	4	7.5	9	12.5	3	5	10	10	**XTFC016DC_**			**XTFR016DC_**		
16 – 25	350	5.5	12.5	12.5	22	7-1/2	7-1/2	20	25	**XTFC025DC_**			**XTFR025DC_**		
25 – 32	448	7.5	15	17.5	22	10	10	25	30	**XTFC032DC_**			**XTFR032DC_**		
Frame D MMP + Frame D Contactor															
32 – 40	560	11	20	22	30	10	10	30	40	**XTFC040DD_**			**XTFR040DD_**		
40 – 50	700	14	25	30	45	10	15	30	—	**XTFC050DD_**			**XTFR050DD_**		
50 – 58	812	17	30	37	55	15	15	40	—	**XTFC058DD_**			**XTFR058DD_**		
55 – 65	882	18.5	34	37	55	15	15	40	—	**XTFC063DD_**			**XTFR063DD_**		

① Select Combination Motor Controllers by full load amperes. Maximum Motor Ratings (kW, hp) are for reference only. For additional voltages not listed, see **Table 34-194** on **Page 34-165**.

② In this range, calculate motor rating according to rated current. Specified values to NEC 430.6(A)(1).

③ Underscore (_) indicates Magnetic Coil Suffix required. See **Table 34-191** on **Page 34-162**.

Notes:

The assembled Combination Motor Controller (CMC) consists of an XTPR Manual Motor Protector (MMP) and an XTCE contactor and a required Line Side Adapter. For Frame B MMP + Frame B Contactor assemblies, the XTFC and XTFR can be mounted directly on DIN rail without an adapter. The contactors are supported mechanically with a mechanical connection element (included in XTPAXTPCB, XTPAXRPCRB). For 16A and above, the assembly is mounted via a DIN Rail Adapter Plate (XTPAXTPCPC, XTPAXTPCPD) and the electrical connection is made with electrical contact modules (XTPAXECMC, XTPAXECMD), both included in XTPAXTPCC and XTPAXTPCD. For detailed component lists, see **Table 34-196**, **Page 34-167**.

Service Factor Settings: Setting I_r of current scale in dependence of load factor:

SF = 1.15 → $I_r = 1 \times I_{n\ mot}$

SF = 1 → $I_r = 0.9 \times I_{n\ mot}$

Single-phasing sensitivity to IEC/EN 60947-4-1, VDE 0660 Part 102.

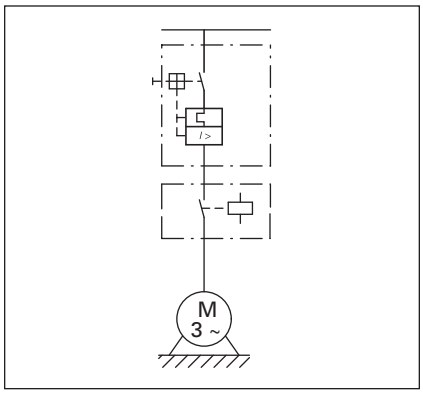

Figure 34-133. XTFC Combination Motor Controller

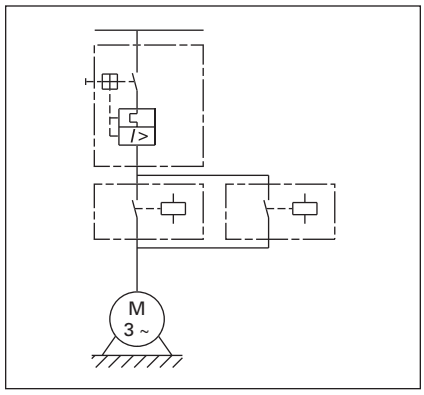

Figure 34-134. XTFR Combination Motor Controller

Discount Symbol **1CD7**

34

Table 34-191. AC and DC Coil Suffixes

Coil Voltage	Suffix Code
Frame B Contactors	
110V 50 Hz, 120V 60 Hz	**A**
220V 50 Hz, 240V 60 Hz	**B**
230V 50 Hz	**F**
24V 50/60 Hz	**T**
24V DC	**TD** ①
415V 50 Hz, 480V 60 Hz	**C**
550V 50 Hz, 600V 60 Hz	**D**
208V 60 Hz	**E**
190V 50 Hz, 220V 60 Hz	**G**
240V 50 Hz, 277V 60 Hz	**H**
380V 50 Hz, 440V 60 Hz	**L**
400V 50 Hz	**N**
380V 60 Hz	**P**
12V 50/60 Hz	**R**
24V 50 Hz	**U**
42V 50 Hz, 48V 60 Hz	**W**
48V 50 Hz	**Y**
120V DC	**AD** ①
220V DC	**BD** ①
12V DC	**RD** ①
48V DC	**WD** ①

Coil Voltage	Suffix Code
Frame C and D Contactors	
110V 50 Hz, 120V 60 Hz	**A**
220V 50 Hz, 240V 60 Hz	**B**
230V 50 Hz	**F**
24V 50/60 Hz	**T**
24 – 27V DC	**TD** ①
415V 50 Hz, 480V 60 Hz	**C**
550V 50 Hz, 600V 60 Hz	**D**
208V 60 Hz	**E**
190V 50 Hz, 220V 60 Hz	**G**
240V 50 Hz, 277V 60 Hz	**H**
380V 50 Hz, 440V 60 Hz	**L**
400V 50 Hz	**N**
380V 60 Hz	**P**
12V 50/60 Hz	**R**
24V 50 Hz	**U**
42V 50 Hz, 48V 60 Hz	**W**
48V 50 Hz	**Y**
110 – 130V DC	**AD** ①
200 – 240V DC	**BD** ①
12 – 14V DC	**RD** ①
48 – 60V DC	**WD** ①

① With DC Operation: Integrated diode-resistor combination, coil rating 2.6W.

Accessories

Line Side Adapters

Line Side Adapters are required for use with XTPR MMPs only when used as Type E Self-Protected Manual Combination Starters or as part of XTFC or XTFR Type F Combination Motor Controllers. Not required for Group Installation.

Table 34-192. Line Side Adapters

	Description	Catalog Number	Price U.S. $
	For use with Frame B MMPs (up to 32A)	**XTPAXLSA**	
	For use with Frame D MMPs (up to 40A)	**XTPAXLSAD**	

Discount Symbol **1CD7**

Combination Connection Kits

Combination Connection Kits include the necessary components to field assemble a Manual Motor Controller with an MMP (XTPR) and Contactor (XTCE).

Table 34-193. Combination Connection Kits

	For Use with…	Description	Std. Pack	Catalog Number	Price U.S. $
Non-reversing Starters					
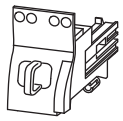	XTPR...B + XTCE...B	Comprised of: ■ Mechanical connection element for XTPR...B and contactor ■ Main current wiring between XTPR...B and contactor in tool-less plug connection ■ Cable guidance Use as contactor auxiliary switch XTCEXFAT_. Control cable guidance: max. 6 cables up to 2.5 mm^2 external diameter or 4 cables up to 3.5 mm^2 external diameter.	1	**XTPAXTPCB**	
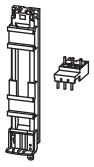	XTPR...B + XTCE...C	Comprised of: ■ DIN rail adapter plate ■ Main current wiring between XTPR and contactor	1	**XTPAXTPCC**	
	XTPR...D + XTCE...D		1	**XTPAXTPCD**	
Reversing Starters					
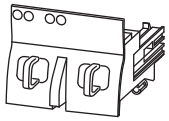	XTPR...B + XTCE...B01_	Comprised of: ■ Mechanical connection element for XTPR...B and contactor ■ Reversing starter main current wiring in tool-less plug connection ■ Control cables for electrical interlocking in tool-less plug connection: – K1M: A1 – K2M: 21 – K1M: 21 – K2M: A1 – K1M: A2 – K2M: A2 ■ Cable guidance Use as contactor auxiliary switch XTCEXFAT_. Control cable guidance: max. 6 cables up to 2.5 mm^2 external diameter or 4 cables up to 3.5 mm^2 external diameter.	1	**XTPAXTPCRB**	
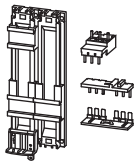	XTPR...B + XTCE...C	Comprised of: ■ DIN rail adapter plate ■ Reversing starter main current wiring	1	**XTPAXTPCRC**	
Star-Delta Starter Sets					
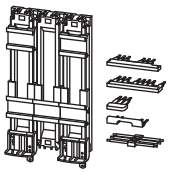	XTPR...B + XTCE...B	Comprised of: ■ DIN rail adapter plate ■ Main current wiring between XTPR...B and contactor ■ Electrical interlock between delta and star contactor ■ Use as contactor auxiliary switch XTCEXFAT_	1	**XTPAXSDSB**	
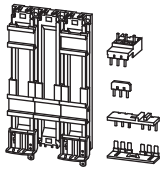	XTPR...B + XTCE...C	Comprised of: ■ DIN rail adapter plate ■ Main current wiring between XTPR...B and contactor	1	**XTPAXSDSC**	

Discount Symbol **1CD7**

34

Combination Connection Kits

Table 34-193. Combination Connection Kits (Continued)

	For Use with…	Description	Std. Pack	Catalog Number	Price U.S. $ ①
Electric Contact Module					
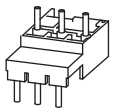	XTPR...B + XTCE...C	Comprised of: ■ Main current wiring between XTPR...B and contactor ■ Use only in combination with busbar adapter	5	**XTPAXECMC**	
	XTPR...D + XTCE...D	Comprised of: ■ Main current wiring between XTPR...D and contactor ■ Use only in combination with busbar adapter	5	**XTPAXECMD**	
DIN Rail Adapter Plates					
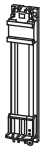	XTPAXTPCB XTPAXTPCRB	Comprised of: ■ 45 mm wide adapter plate with one DIN rail ■ Connection element for side-by-side positioning of further plates	4	**XTPAXTPCPB**	
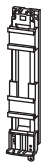	XTPR...B + XTCE...C XTPAXECMC	Comprised of: ■ 45 mm wide adapter plate with two DIN rails ■ Connection element for side-by-side positioning of further plates	4	**XTPAXTPCRPB**	
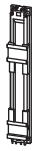	XTPAXECMD XTPR...D + XTCE...C XTPR...D + XTCE...D	Comprised of: ■ 55 mm wide adapter plate with two DIN rails ■ Connection cams for further plates ■ For use with reversing and star-delta starters	4	**XTPAXTPCPD**	
Lateral Module					
	—	■ Can be grouped on the DIN rail adapter ■ Expansion of the mounting width by 9 mm	10	**XTPAXLM**	
Connection Element					
	—	■ For connection of several DIN rail adapters	50	**XTPAXCNE**	

① Orders must be placed in multiples of package quantity listed.

Discount Symbol **1CD7**

Technical Data and Specifications

Table 34-194. Manual and Combination Motor Controllers Motor Ratings

Assembled Controller ③		FLA Adjustment Range / Overload Release — I_r (Amps)	Maximum Motor Ratings — P ①													
			Maximum Motor kW Rating AC-3 — P (kW)					Maximum hp Rating — P (hp)								
			Three-Phase					Single-Phase				Three-Phase				
Non-reversing	Reversing		220 – 240V	380 – 415V	440V	500V	660 – 690V	115V	200V	208V	240V	200V	208V	240V	480V	600V
XTSC & XTSR Manual Motor Controllers (MMC) / Starter Combinations																
XTSC & XTSR Frame B MMP + Frame B Contactor																
XTSCP16BB_	XTSRP16BB_	0.1 – 0.16	—	—	—	—	0.06	②	②	②	②	②	②	②	1/2	1/2
XTSCP25BB_	XTSRP25BB_	0.16 – 0.25	—	0.06	0.06	0.06	0.12	②	②	②	②	②	②	②	1/2	1/2
XTSCP40BB_	XTSRP40BB_	0.25 – 0.4	0.06	0.09	0.12	0.12	0.18	②	②	②	②	②	②	②	1/2	1/2
XTSCP63BB_	XTSRP63BB_	0.4 – 0.63	0.09	0.18	0.18	0.25	0.25	②	②	②	②	②	②	②	1/2	1/2
XTSC001BB_	XTSR001BB_	0.63 – 1	0.12	0.25	0.25	0.37	0.55	②	②	②	②	②	②	②	1/2	1/2
XTSC1P6BB_	XTSR1P6BB_	1 – 1.6	0.25	0.55	0.55	0.75	1.1	②	②	②	1/10	②	②	②	3/4	1
XTSC2P5BB_	XTSR2P5BB_	1.6 – 2.5	0.37	0.75	1.1	1.1	1.5	—	1/8	1/8	1/6	1/2	1/2	1/2	1	1-1/2
XTSC004BB_	XTSR004BB_	2.5 – 4	0.75	1.5	1.5	2.2	3	1/8	1/4	1/4	1/3	1	1	1	2	3
XTSC6P3BB_	XTSR6P3BB_	4 – 6.3	1.1	2.2	3	3	4	1/4	1/2	1/2	1/2	1-1/2	1-1/2	1-1/2	3	5
XTSC010BB_	XTSR010BB_	6.3 – 10	2.2	4	4	4	7.5	1/2	1	1	1-1/2	3	3	3	7-1/2	10
XTSC012BB_	XTSR012BB_	8 – 12	3	5.5	5.5	5.5	11	1/2	1-1/2	1-1/2	2	3	3	3	7-1/2	10
XTSC016BB_	—	10 – 16	4	7.5	9	9	12.5	1	2	2	2	3	3	3	10	10
XTSC & XTSR Frame B MMP + Frame C Contactor																
XTSC016BC_	XTSR016BC_	10 – 16	4	7.5	9	9	12.5	1	2	2	2	3	3	5	10	10
XTSC020BC_	XTSR020BC_	16 – 20	5.5	9	11	12.5	15	1-1/2	3	3	3	5	5	5	10	15
XTSC025BC_	XTSR025BC_	20 – 25	5.5	11	12.5	15	22	1-1/2	3	3	3	5	5	7-1/2	15	20
XTSC032BC_	XTSR032BC_	25 – 32	7.5	15	15	22	30	2	3	3	5	7-1/2	7-1/2	10	20	25
XTSC & XTSR Frame D MMP + Frame C Contactor																
XTSC016DC_	XTSR016DC_	10 – 16	4	7.5	9	9	12.5	1	2	2	3	3	5	5	10	15
XTSC025DC_	XTSR025DC_	16 – 25	5.5	12.5	12.5	12.5	22	2	3	3	3	7-1/2	7-1/2	7-1/2	20	25
XTSC032DC_	XTSR032DC_	25 – 32	7.5	15	17.5	17.5	22	3	5	5	5	10	10	10	25	30
XTSC & XTSR Frame D MMP + Frame D Contactor																
XTSC040DD_	XTSR040DD_	32 – 40	11	20	22	22	30	3	5	—	7-1/2	10	—	—	30	30
XTSC050DD_	XTSR050DD_	40 – 50	14	25	30	30	45	—	7-1/2	7-1/2	—	15	15	15	30	40
XTSC058DD_	XTSR058DD_	50 – 58	17	30	37	37	55	—	—	—	10	—	—	—	40	—
XTSC063DD_	XTSR063DD_	55 – 63	18.5	34	37	37	55	—	—	—	—	—	—	—	40	—
XTFC & XTFR Combination Motor Controllers (CMC), UL508 Type F																
XTFC & XTFR Frame B MMP + Frame B Contactor																
XTFCP16BB_	XTFRP16BB_	0.1 – 0.16	—	—	—	—	0.06	②	②	②	②	②	②	②	1/2	1/2
XTFCP25BB_	XTFRP25BB_	0.16 – 0.25	—	0.06	0.06	0.06	0.12	②	②	②	②	②	②	②	1/2	1/2
XTFCP40BB_	XTFRP40BB_	0.25 – 0.4	0.06	0.09	0.12	0.12	0.18	②	②	②	②	②	②	②	1/2	1/2
XTFCP63BB_	XTFRP63BB_	0.4 – 0.63	0.09	0.18	0.18	0.25	0.25	②	②	②	②	②	②	②	1/2	1/2
XTFC001BB_	XTFR001BB_	0.63 – 1	0.12	0.25	0.25	0.37	0.55	②	②	②	②	②	②	②	1/2	1/2
XTFC1P6BB_	XTFR1P6BB_	1 – 1.6	0.25	0.55	0.55	0.75	1.1	②	②	②	1/10	②	②	②	3/4	1
XTFC2P5BB_	XTFR2P5BB_	1.6 – 2.5	0.37	0.75	1.1	1.1	1.5	—	1/8	1/8	1/6	1/2	1/2	1/2	1	1-1/2
XTFC004BB_	XTFR004BB_	2.5 – 4	0.75	1.5	1.5	2.2	3	1/8	1/4	1/4	1/3	1	1	1	2	3
XTFC6P3BB_	XTFR6P3BB_	4 – 6.3	1.1	2.2	3	3	4	1/4	1/2	1/2	1/2	1-1/2	1-1/2	1-1/2	3	5
XTFC010BB_	XTFR010BB_	6.3 – 10	2.2	4	4	4	7.5	1/2	1	1	1-1/2	3	3	3	7-1/2	10
XTFC012BB_	XTFR012BB_	8 – 12	3	5.5	5.5	5.5	11	1/2	1-1/2	1-1/2	2	3	3	3	7-1/2	—
XTFC016BB_	—	10 – 16	4	7.5	9	9	12.5	1	2	2	2	3	3	3	10	—
XTFC & XTFR Frame B MMP + Frame C Contactor																
XTFC016BC_	XTFR016BC_	10 – 16	4	7.5	9	9	12.5	1	2	2	2	3	3	5	10	—
XTFC020BC_	XTFR020BC_	16 – 20	5.5	9	11	12.5	15	1-1/2	3	3	3	5	5	5	10	—
XTFC025BC_	XTFR025BC_	20 – 25	5.5	11	12.5	15	22	1-1/2	3	3	3	5	5	7-1/2	15	—
XTFC032BC_	XTFR032BC_	25 – 32	7.5	15	15	22	30	2	3	3	5	7-1/2	7-1/2	10	20	—
XTFC & XTFR Frame D MMP + Frame C Contactor																
XTFC016DC_	XTFR016DC_	10 – 16	4	7.5	9	9	12.5	1	2	2	3	3	5	5	10	15
XTFC025DC_	XTFR025DC_	16 – 25	5.5	12.5	12.5	12.5	22	2	3	3	3	7-1/2	7-1/2	7-1/2	20	25
XTFC032DC_	XTFR032DC_	25 – 32	7.5	15	17.5	17.5	22	3	5	5	5	10	10	10	25	30
XTFC & XTFR Frame D MMP + Frame D Contactor																
XTFC040DD_	XTFR040DD_	32 – 40	11	20	22	22	30	3	5	—	7-1/2	10	—	—	30	30

① Select Manual Motor Protectors by full load amperes. Maximum Motor Ratings (kW, hp) are for reference only.

② In this range, calculate motor rating according to rated current. Specified values to NEC Table 430-250.

③ Underscore (_) indicates Magnetic Coil Suffix required. See **Table 34-191** on **Page 34-162**.

Notes:

Service Factor Settings: Setting I_r of current scale in dependence of load factor:

SF = 1.15 → $I_r = 1 \times I_{n\ mot}$

SF = 1 → $I_r = 0.9 \times I_{n\ mot}$

Single-phasing sensitivity to IEC/EN 60947-4-1, VDE 0660 Part 102.

34

Table 34-195. XTSC and XTSR Manual Motor Controllers (MMC) / Starter Combinations — Component Bill of Material

Factory Assembled Motor Protective Device with Thermal and Magnetic Trip + Contactor					
Assembled Manual Motor Controller ①	FLA Adjustment Range / Overload Release — I_r (Amps)	Component Catalog Numbers			
		Manual Motor Protector	Combination Connection Kit	Contactor ①	Manual Motor Protector Auxiliary Contact
Non-reversing					
XTSC Frame B MMP + Frame B Contactor					
XTSCP16BB_	0.1 – 0.16	XTPRP16BC1	XTPAXTPCB	XTCE007B10_	XTPAXFA11
XTSCP25BB_	0.16 – 0.25	XTPRP25BC1	XTPAXTPCB	XTCE007B10_	XTPAXFA11
XTSCP40BB_	0.25 – 0.4	XTPRP40BC1	XTPAXTPCB	XTCE007B10_	XTPAXFA11
XTSCP63BB_	0.4 – 0.63	XTPRP63BC1	XTPAXTPCB	XTCE007B10_	XTPAXFA11
XTSC001BB_	0.63 – 1	XTPR001BC1	XTPAXTPCB	XTCE007B10_	XTPAXFA11
XTSC1P6BB_	1 – 1.6	XTPR1P6BC1	XTPAXTPCB	XTCE007B10_	XTPAXFA11
XTSC2P5BB_	1.6 – 2.5	XTPR2P5BC1	XTPAXTPCB	XTCE007B10_	XTPAXFA11
XTSC004BB_	2.5 – 4	XTPR004BC1	XTPAXTPCB	XTCE007B10_	XTPAXFA11
XTSC6P3BB_	4 – 6.3	XTPR6P3BC1	XTPAXTPCB	XTCE007B10_	XTPAXFA11
XTSC010BB_	6.3 – 10	XTPR010BC1	XTPAXTPCB	XTCE009B10_	XTPAXFA11
XTSC012BB_	8 – 12	XTPR012BC1	XTPAXTPCB	XTCE012B10_	XTPAXFA11
XTSC016BB_	10 – 16	XTPR016BC1	XTPAXTPCB	XTCE015B10_	XTPAXFA11
XTSC Frame B MMP + Frame C Contactor					
XTSC016BC_	10 – 16	XTPR016BC1	XTPAXTPCC	XTCE018C10_	XTPAXFA11
XTSC020BC_	16 – 20	XTPR020BC1	XTPAXTPCC	XTCE025C10_	XTPAXFA11
XTSC025BC_	20 – 25	XTPR025BC1	XTPAXTPCC	XTCE025C10_	XTPAXFA11
XTSC032BC_	25 – 32	XTPR032BC1	XTPAXTPCC	XTCE032C10_	XTPAXFA11
XTSC Frame D MMP + Frame C Contactor					
XTSC016DC_	10 – 16	XTPR016DC1	②	XTCE018C10_	XTPAXFA11
XTSC025DC_	16 – 25	XTPR025DC1	②	XTCE025C10_	XTPAXFA11
XTSC032DC_	25 – 32	XTPR032DC1	②	XTCE032C10_	XTPAXFA11
XTSC Frame D MMP + Frame D Contactor					
XTSC040DD_	32 – 40	XTPR040DC1	XTPAXTPCD ③	XTCE040D00_	XTPAXFA11
XTSC050DD_	40 – 50	XTPR050DC1	XTPAXTPCD ③	XTCE050D00_	XTPAXFA11
XTSC058DD_	50 – 58	XTPR058DC1	XTPAXTPCD ③	XTCE065D00_	XTPAXFA11
XTSC063DD_	55 – 63	XTPR063DC1	XTPAXTPCD ③	XTCE065D00_	XTPAXFA11
Reversing					
XTSR Frame B MMP + Frame B Contactor					
XTSRP16BB_	0.1 – 0.16	XTPBP16BC1	XTPAXTPCRB	(2) XTCE007B01_	XTPAXFA11
XTSRP25BB_	0.16 – 0.25	XTPRP25BC1	XTPAXTPCRB	(2) XTCE007B01_	XTPAXFA11
XTSRP40BB_	0.25 – 0.4	XTPRP40BC1	XTPAXTPCRB	(2) XTCE007B01_	XTPAXFA11
XTSRP63BB_	0.4 – 0.63	XTPRP63BC1	XTPAXTPCRB	(2) XTCE007B01_	XTPAXFA11
XTSR001BB_	0.63 – 1	XTPR001BC1	XTPAXTPCRB	(2) XTCE007B01_	XTPAXFA11
XTSR1P6BB_	1 – 1.6	XTPR1P6BC1	XTPAXTPCRB	(2) XTCE007B01_	XTPAXFA11
XTSR2P5BB_	1.6 – 2.5	XTPR2P5BC1	XTPAXTPCRB	(2) XTCE007B01_	XTPAXFA11
XTSR004BB_	2.5 – 4	XTPR004BC1	XTPAXTPCRB	(2) XTCE007B01_	XTPAXFA11
XTSR6P3BB_	4 – 6.3	XTPR6P3BC1	XTPAXTPCRB	(2) XTCE007B01_	XTPAXFA11
XTSR010BB_	6.3 – 10	XTPR010BC1	XTPAXTPCRB	(2) XTCE009B01_	XTPAXFA11
XTSR012BB_	8 – 12	XTPR012BC1	XTPAXTPCRB	(2) XTCE012B01_	XTPAXFA11
XTSR Frame B MMP + Frame C Contactor					
XTSR016BC_	10 – 16	XTPR016BC1	XTPAXTPCRC	(2) XTCE018C01_	XTPAXFA11
XTSR020BC_	16 – 20	XTPR020BC1	XTPAXTPCRC	(2) XTCE025C01_	XTPAXFA11
XTSR025BC_	20 – 25	XTPR025BC1	XTPAXTPCRC	(2) XTCE025C01_	XTPAXFA11
XTSR032BC_	25 – 32	XTPR032BC1	XTPAXTPCRC	(2) XTCE032C01_	XTPAXFA11
XTSR Frame D MMP + Frame C Contactor					
XTSR016DC_	10 – 16	XTPR016DC1	②	(2) XTCE018C01_	XTPAXFA11
XTSR025DC_	16 – 25	XTPR025DC1	②	(2) XTCE025C01_	XTPAXFA11
XTSR032DC_	25 – 32	XTPR032DC1	②	(2) XTCE032C01_	XTPAXFA11
XTSR Frame D MMP + Frame D Contactor					
XTSR040DD_	32 – 40	XTPR040DC1	③	(2) XTCE040D00_	XTPAXFA11
XTSR050DD_	40 – 50	XTPR050DC1	③	(2) XTCE050D00_	XTPAXFA11
XTSR058DD_	50 – 58	XTPR058DC1	③	(2) XTCE065D00_	XTPAXFA11
XTSR063DD_	55 – 63	XTPR063DC1	③	(2) XTCE065D00_	XTPAXFA11

① Underscore (_) indicates Magnetic Coil Suffix required. See **Table 34-191** on **Page 34-162**.

② The connection between the XTPR…DC1 and the XTCE…C... contactor will be made with flexible wire and mounted to the DIN Rail Adapter Plate (XTPAXTPCPD).

③ The reversing connection between the XTPR…DC1 and the (2) XTCE…C… contactors will be accomplished by using the non-reversing combination connection kit (XTPAXTPCD), Frame D reversing link kit (XTCEXRLD), additional DIN Rail Adapter Plate (XTPAXTPCPD), and DIN Adapter Connection Element (XTPAXCNE).

Table 34-196. XTFC and XTFR Combination Motor Controllers (CMC), UL508 Type F — Component Bill of Material

Factory Assembled Motor Protective Device with Thermal and Magnetic Trip + Contactor + Required Line Side Adapter						
Assembled Combination Motor Controller ①	FLA Adjustment Range / Overload Release — I_r (Amps)	Component Catalog Numbers				
		Line Side Adapter	Manual Motor Protector	Combination Connection Kit	Contactor ①	Manual Motor Protector Auxiliary Contact
Non-reversing						
XTFC Frame B MMP + Frame B Contactor						
XTFCP16BB_	0.1 – 0.16	XTPAXLSA	XTPRP16BC1	XTPAXTPCB	XTCE007B10_	XTPAXFA11
XTFCP25BB_	0.16 – 0.25	XTPAXLSA	XTPRP25BC1	XTPAXTPCB	XTCE007B10_	XTPAXFA11
XTFCP40BB_	0.25 – 0.4	XTPAXLSA	XTPRP40BC1	XTPAXTPCB	XTCE007B10_	XTPAXFA11
XTFCP63BB_	0.4 – 0.63	XTPAXLSA	XTPRP63BC1	XTPAXTPCB	XTCE007B10_	XTPAXFA11
XTFC001BB_	0.63 – 1	XTPAXLSA	XTPR001BC1	XTPAXTPCB	XTCE007B10_	XTPAXFA11
XTFC1P6BB_	1 – 1.6	XTPAXLSA	XTPR1P6BC1	XTPAXTPCB	XTCE007B10_	XTPAXFA11
XTFC2P5BB_	1.6 – 2.5	XTPAXLSA	XTPR2P5BC1	XTPAXTPCB	XTCE007B10_	XTPAXFA11
XTFC004BB_	2.5 – 4	XTPAXLSA	XTPR004BC1	XTPAXTPCB	XTCE007B10_	XTPAXFA11
XTFC6P3BB_	4 – 6.3	XTPAXLSA	XTPR6P3BC1	XTPAXTPCB	XTCE007B10_	XTPAXFA11
XTFC010BB_	6.3 – 10	XTPAXLSA	XTPR010BC1	XTPAXTPCB	XTCE009B10_	XTPAXFA11
XTFC012BB_	8 – 12	XTPAXLSA	XTPR012BC1	XTPAXTPCB	XTCE012B10_	XTPAXFA11
XTFC016BB_	10 – 16	XTPAXLSA	XTPR016BC1	XTPAXTPCB	XTCE015B10_	XTPAXFA11
XTFC Frame B MMP + Frame C Contactor						
XTFC016BC_	10 – 16	XTPAXLSA	XTPR016BC1	XTPAXTPCC	XTCE018C10_	XTPAXFA11
XTFC020BC_	16 – 20	XTPAXLSA	XTPR020BC1	XTPAXTPCC	XTCE025C10_	XTPAXFA11
XTFC025BC_	20 – 25	XTPAXLSA	XTPR025BC1	XTPAXTPCC	XTCE025C10_	XTPAXFA11
XTFC032BC_	25 – 32	XTPAXLSA	XTPR032BC1	XTPAXTPCC	XTCE032C10_	XTPAXFA11
XTFC Frame D MMP + Frame C Contactor						
XTFC016DC_	10 – 16	XTPAXLSAD	XTPR016DC1	②	XTCE018C10_	XTPAXFA11
XTFC025DC_	16 – 25	XTPAXLSAD	XTPR025DC1	②	XTCE025C10_	XTPAXFA11
XTFC032DC_	25 – 32	XTPAXLSAD	XTPR032DC1	②	XTCE032C10_	XTPAXFA11
XTFC Frame D MMP + Frame D Contactor						
XTFC040DD_	32 – 40	XTPAXLSAD	XTPR040DC1	XTPAXTPCD ③	XTCE040D00_	XTPAXFA11
XTFC050DD_	40 – 50	XTPAXLSAD	XTPR050DC1	XTPAXTPCD ③	XTCE050D00_	XTPAXFA11
XTFC058DD_	50 – 58	XTPAXLSAD	XTPR058DC1	XTPAXTPCD ③	XTCE065D00_	XTPAXFA11
XTFC063DD_	55 – 63	XTPAXLSAD	XTPR063DC1	XTPAXTPCD ③	XTCE065D00_	XTPAXFA11
Reversing						
XTFR Frame B MMP + Frame B Contactor						
XTFRP16BB_	0.1 – 0.16	XTPAXLSA	XTPRP16BC1	XTPAXTPCRB	(2) XTCE007B01_	XTPAXFA11
XTFRP25BB_	0.16 – 0.25	XTPAXLSA	XTPRP25BC1	XTPAXTPCRB	(2) XTCE007B01_	XTPAXFA11
XTFRP40BB_	0.25 – 0.4	XTPAXLSA	XTPRP40BC1	XTPAXTPCRB	(2) XTCE007B01_	XTPAXFA11
XTFRP63BB_	0.4 – 0.63	XTPAXLSA	XTPRP63BC1	XTPAXTPCRB	(2) XTCE007B01_	XTPAXFA11
XTFR001BB_	0.63 – 1	XTPAXLSA	XTPR001BC1	XTPAXTPCRB	(2) XTCE007B01_	XTPAXFA11
XTFR1P6BB_	1 – 1.6	XTPAXLSA	XTPR1P6BC1	XTPAXTPCRB	(2) XTCE007B01_	XTPAXFA11
XTFR2P5BB_	1.6 – 2.5	XTPAXLSA	XTPR2P5BC1	XTPAXTPCRB	(2) XTCE007B01_	XTPAXFA11
XTFR004BB_	2.5 – 4	XTPAXLSA	XTPR004BC1	XTPAXTPCRB	(2) XTCE007B01_	XTPAXFA11
XTFR6P3BB_	4 – 6.3	XTPAXLSA	XTPR6P3BC1	XTPAXTPCRB	(2) XTCE007B01_	XTPAXFA11
XTFR010BB_	6.3 – 10	XTPAXLSA	XTPR010BC1	XTPAXTPCRB	(2) XTCE009B01_	XTPAXFA11
XTFR012BB_	8 – 12	XTPAXLSA	XTPR012BC1	XTPAXTPCRB	(2) XTCE012B01_	XTPAXFA11
XTFR Frame B MMP + Frame C Contactor						
XTFR016BC_	10 – 16	XTPAXLSA	XTPR016BC1	XTPAXTPCRC	(2) XTCE018C01_	XTPAXFA11
XTFR020BC_	16 – 20	XTPAXLSA	XTPR020BC1	XTPAXTPCRC	(2) XTCE025C01_	XTPAXFA11
XTFR025BC_	20 – 25	XTPAXLSA	XTPR025BC1	XTPAXTPCRC	(2) XTCE025C01_	XTPAXFA11
XTFR032BC_	25 – 32	XTPAXLSA	XTPR032BC1	XTPAXTPCRC	(2) XTCE032C01_	XTPAXFA11
XTFR Frame D MMP + Frame C Contactor						
XTFR016DC_	10 – 16	XTPAXLSAD	XTPR016DC1	②	(2) XTCE018C01_	XTPAXFA11
XTFR025DC_	16 – 25	XTPAXLSAD	XTPR025DC1	②	(2) XTCE025C01_	XTPAXFA11
XTFR032DC_	25 – 32	XTPAXLSAD	XTPR032DC1	②	(2) XTCE032C01_	XTPAXFA11
XTFR Frame D MMP + Frame D Contactor						
XTFR040DD_	32 – 40	XTPAXLSAD	XTPR040DC1	③	(2) XTCE040D00_	XTPAXFA11
XTFR050DD_	40 – 50	XTPAXLSAD	XTPR050DC1	③	(2) XTCE050D00_	XTPAXFA11
XTFR058DD_	50 – 58	XTPAXLSAD	XTPR058DC1	③	(2) XTCE065D00_	XTPAXFA11
XTFR063DD_	55 – 63	XTPAXLSAD	XTPR063DC1	③	(2) XTCE065D00_	XTPAXFA11

① Underscore (_) indicates Magnetic Coil Suffix required. See **Table 34-191** on **Page 34-162**.

② The connection between the XTPR…DC1 and the XTCE…C... contactor will be made with flexible wire and mounted to the DIN Rail Adapter Plate (XTPAXTPCPD).

③ The reversing connection between the XTPR…DC1 and the (2) XTCE…C... contactors will be accomplished by using the non-reversing combination connection kit (XTPAXTPCD), Frame D reversing link kit (XTCEXRLD), additional DIN Rail Adapter Plate (XTPAXTPCPD), and DIN Adapter Connection Element (XTPAXCNE).

Table 34-197. Manual Motor Controllers Short-Circuit Ratings for UL/CSA Group Installations

XTSC & XTSR Manual Motor Controllers (MMC) / Starter Combinations								
Assembled Controller ①		FLA Adjustment Range / Overload Release — I_r (Amps)	Short-Circuit Release — I_{rm} (Amps)	Group Installation, UL/CSA				
				Max. RMS Symmetrical Short-Circuit Ratings (kA / kA with Current Limiter)			Maximum Upstream Protective Device (A / A with Current Limiter)	
Non-reversing	Reversing			240V	480V	600V	Maximum Fuse 600V	Maximum Circuit Breaker 600V
XTSC & XTSR Frame B MMP + Frame B Contactor								
XTSCP16BB_	XTSRP16BB_	0.1 – 0.16	2.2	50	50	50	600	600
XTSCP25BB_	XTSRP25BB_	0.16 – 0.25	3.5	50	50	50	600	600
XTSCP40BB_	XTSRP40BB_	0.25 – 0.4	5.6	50	50	50	600	600
XTSCP63BB_	XTSRP63BB_	0.4 – 0.63	8.82	50	50	50	600	600
XTSC001BB_	XTSR001BB_	0.63 – 1	14	50	50	50	600	600
XTSC1P6BB_	XTSR1P6BB_	1 – 1.6	22.4	50	50	50	600	600
XTSC2P5BB_	XTSR2P5BB_	1.6 – 2.5	35	50	50	50	600	600
XTSC004BB_	XTSR004BB_	2.5 – 4	56	50	50	50	600	600
XTSC6P3BB_	XTSR6P3BB_	4 – 6.3	88.2	50	50	50	600	600
XTSC010BB_	XTSR010BB_	6.3 – 10	140	22	22	22	150 / 600	125 / 600
XTSC012BB_	XTSR012BB_	8 – 12	168	10 / 50	10 / 50	10 / 50	150 / 600	125 / 600
XTSC016BB_	—	10 – 16	224	10 / 50	10 / 50	10 / 50	150 / 600	125 / 600
XTSC & XTSR Frame B MMP + Frame C Contactor								
XTSC016BC_	XTSR016BC_	10 – 16	224	10 / 50	10 / 50	10 / 50	150 / 600	125 / 600
XTSC020BC_	XTSR020BC_	16 – 20	280	10 / 18	10 / 18	10 / 18	150 / 600	125 / 600
XTSC025BC_	XTSR025BC_	20 – 25	350	10 / 18	10 / 18	10 / 18	150 / 600	125 / 600
XTSC032BC_	XTSR032BC_	25 – 32	448	5 / 18	5 / 18	5 / 18	150 / 600	125 / 600
XTSC & XTSR Frame D MMP + Frame C Contactor								
XTSC016DC_	XTSR016DC_	10 – 16	224	50	50	10	600	600
XTSC025DC_	XTSR025DC_	16 – 25	350	50	50	10	600	600
XTSC032DC_	XTSR032DC_	25 – 32	448	50	50	10	600	600
XTSC & XTSR Frame D MMP + Frame D Contactor								
XTSC040DD_	XTSR040DD_	32 – 40	560	50	50	10	600	600
XTSC050DD_	XTSR050DD_	40 – 50	700	50	50	10	600	600
XTSC058DD_	XTSR058DD_	50 – 58	812	50	50	—	—	—
XTSC063DD_	XTSR063DD_	55 – 63	882	50	50	—	—	—

① Underscore (_) indicates Magnetic Coil Suffix required. See **Table 34-191** on **Page 34-162**.

Table 34-198. Combination Motor Controllers Short Circuit Ratings for UL 508 Type F Application

XTFC & XTFR Combination Motor Controllers (CMC), UL 508 Type F								
Assembled Controller ②		FLA Adjustment Range / Overload Release — I_r (Amps)	Short-Circuit Release — I_{rm} (Amps)	UL 508 Type F Application				
				Max. RMS Symmetrical Short-Circuit Ratings (kA)			Maximum Upstream Protective Device (A) ③	
Non-reversing	Reversing			240V	480/277V	600/347V	Maximum Fuse 600V	Maximum Circuit Breaker 600V
XTFC & XTFR Frame B MMP + Frame B Contactor								
XTFCP16BB_	XTFRP16BB_	0.1 – 0.16	2.2	50	50	30	Not Required	Not Required
XTFCP25BB_	XTFRP25BB_	0.16 – 0.25	3.5	50	50	30	Not Required	Not Required
XTFCP40BB_	XTFRP40BB_	0.25 – 0.4	5.6	50	50	30	Not Required	Not Required
XTFCP63BB_	XTFRP63BB_	0.4 – 0.63	8.82	50	50	30	Not Required	Not Required
XTFC001BB_	XTFR001BB_	0.63 – 1	14	50	50	30	Not Required	Not Required
XTFC1P6BB_	XTFR1P6BB_	1 – 1.6	22.4	50	50	30	Not Required	Not Required
XTFC2P5BB_	XTFR2P5BB_	1.6 – 2.5	35	50	50	30	Not Required	Not Required
XTFC004BB_	XTFR004BB_	2.5 – 4	56	50	50	30	Not Required	Not Required
XTFC6P3BB_	XTFR6P3BB_	4 – 6.3	88.2	50	50	30	Not Required	Not Required
XTFC010BB_	XTFR010BB_	6.3 – 10	140	50	50	—	Not Required	Not Required
XTFC012BB_	XTFR012BB_	8 – 12	168	42	42	—	Not Required	Not Required
XTFC016BB_	—	10 – 16	224	42	42	—	Not Required	Not Required
XTFC & XTFR Frame B MMP + Frame C Contactor								
XTFC016BC_	XTFR016BC_	10 – 16	224	18	18	—	Not Required	Not Required
XTFC020BC_	XTFR020BC_	16 – 20	280	18	18	—	Not Required	Not Required
XTFC025BC_	XTFR025BC_	20 – 25	350	18	18	—	Not Required	Not Required
XTFC032BC_	XTFR032BC_	25 – 32	448	18	18	—	Not Required	Not Required
XTFC & XTFR Frame D MMP + Frame C Contactor								
XTFC016DC_	XTFR016DC_	10 – 16	224	50	50	50	Not Required	Not Required
XTFC025DC_	XTFR025DC_	16 – 25	350	50	50	50	Not Required	Not Required
XTFC032DC_	XTFR032DC_	25 – 32	448	50	50	50	Not Required	Not Required
XTFC & XTFR Frame D MMP + Frame D Contactor								
XTFC040DD_	XTFR040DD_	32 – 40	560	50	50	50	Not Required	Not Required
XTFC050DD_	XTFR050DD_	40 – 50	700	65	65	—	Not Required	Not Required
XTFC058DD_	XTFR058DD_	50 – 58	812	65	65	—	Not Required	Not Required
XTFC063DD_	XTFR063DD_	55 – 65	882	65	65	—	Not Required	Not Required

② Underscore (_) indicates Magnetic Coil Suffix required. See **Table 34-191** on **Page 34-162**.

③ For UL508 Type F applications, the Combination Motor Controller assembly does not require a dedicated upstream protective device in the panel, thus a maximum rating is not required.

Dimensions

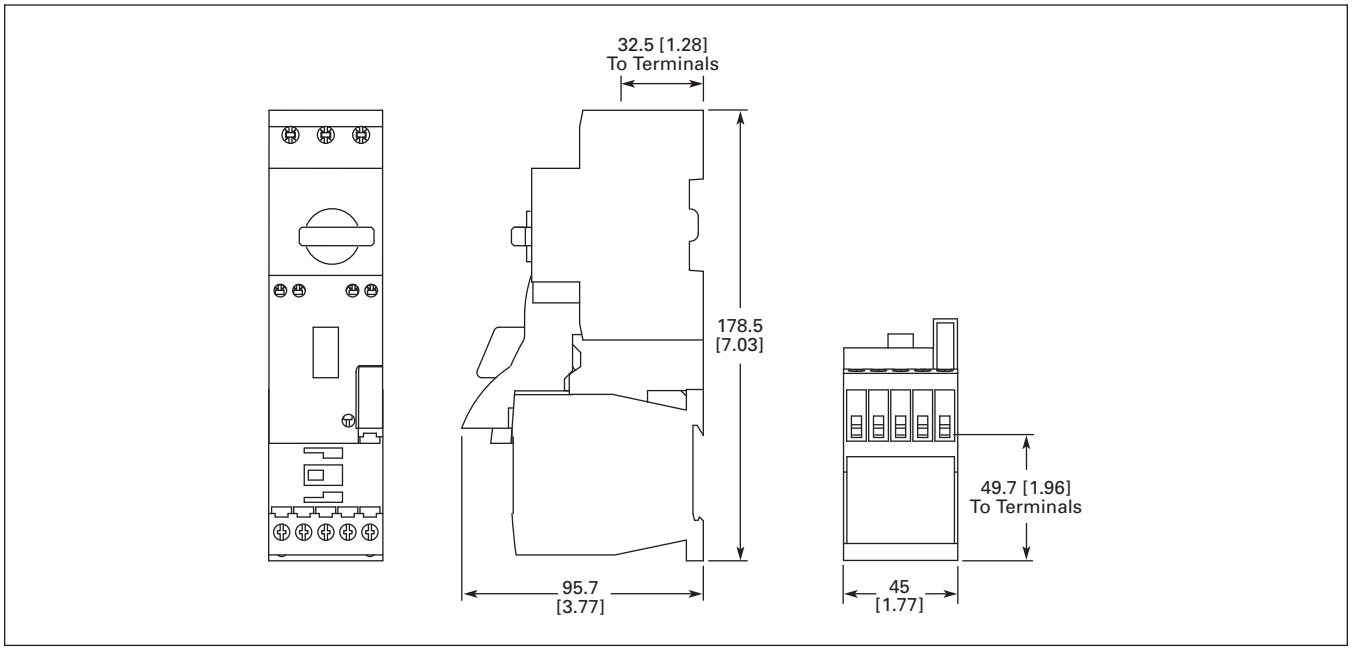

Figure 34-135. XTSC…BB_ — Approximate Dimensions in mm [in]

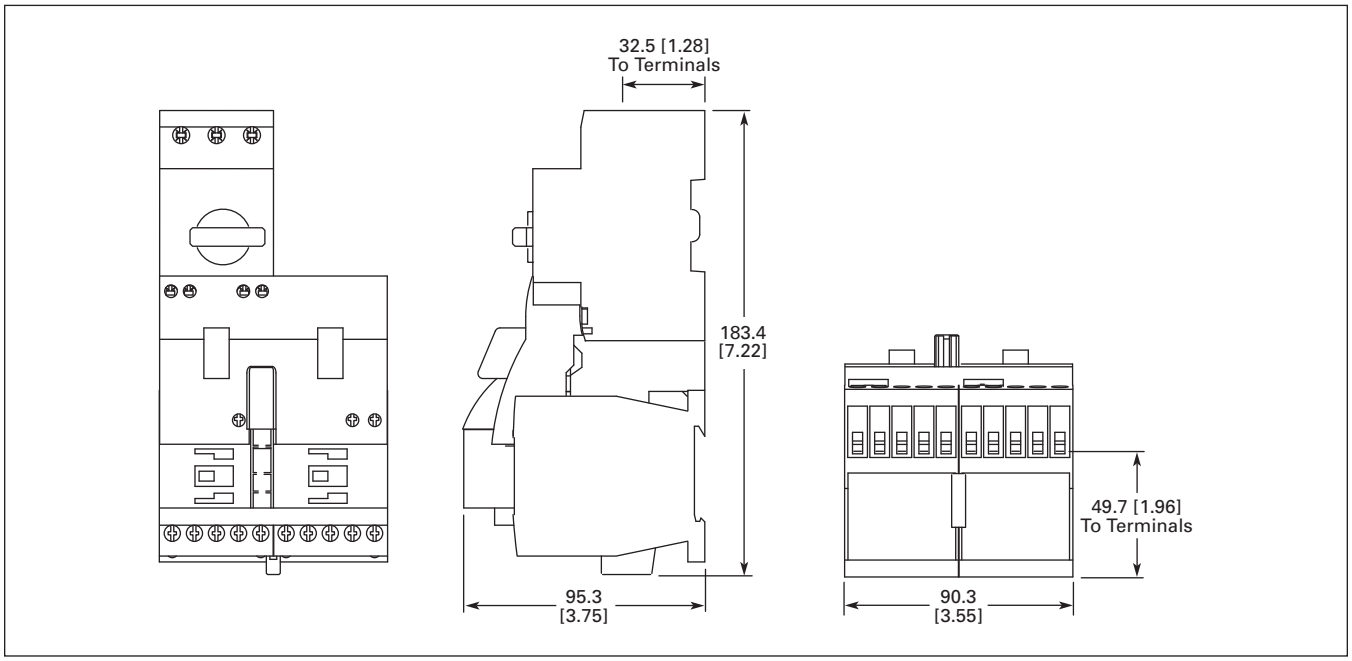

Figure 34-136. XTSR…BB_ — Approximate Dimensions in mm [in]

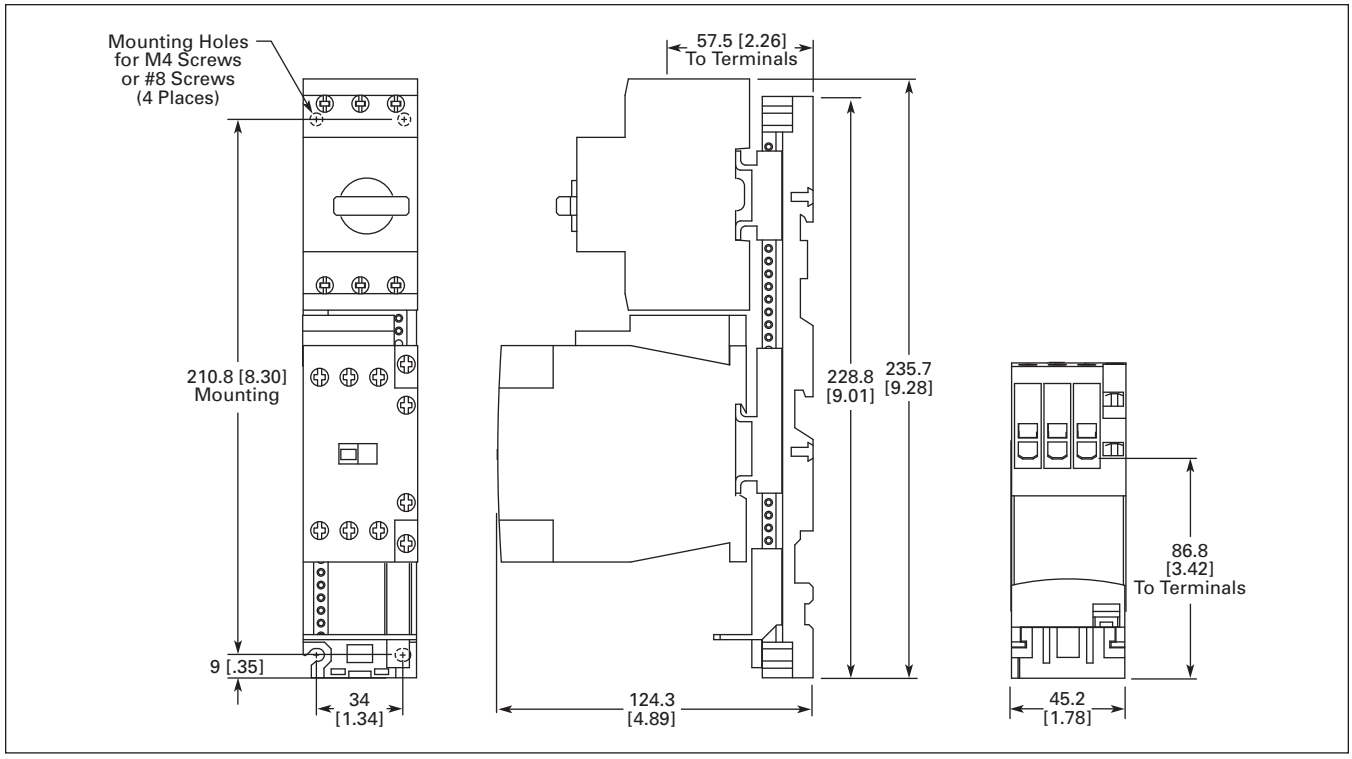

Figure 34-137. XTSC…BC_ — Approximate Dimensions in mm [in]

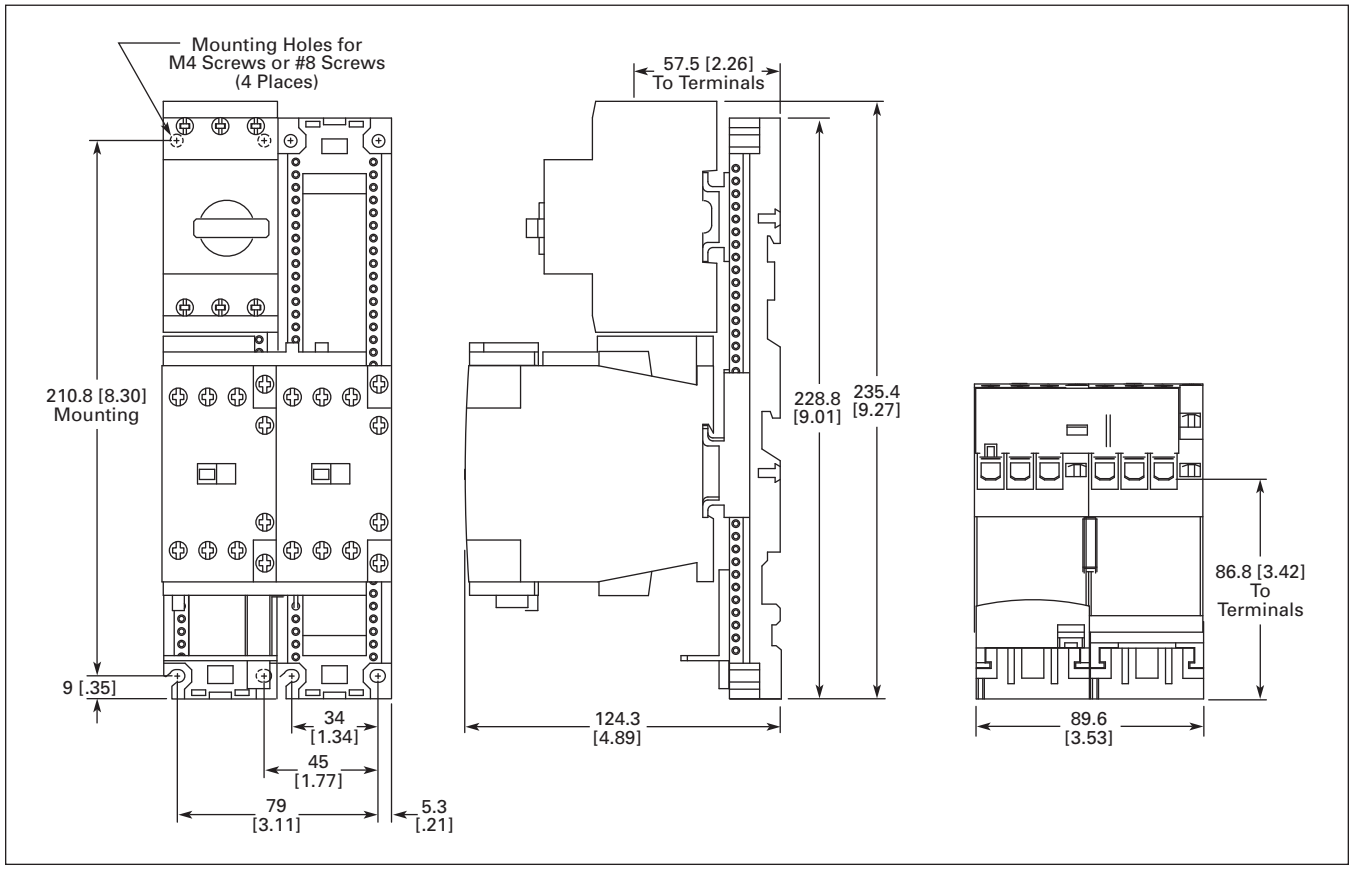

Figure 34-138. XTSR…BC_ — Approximate Dimensions in mm [in]

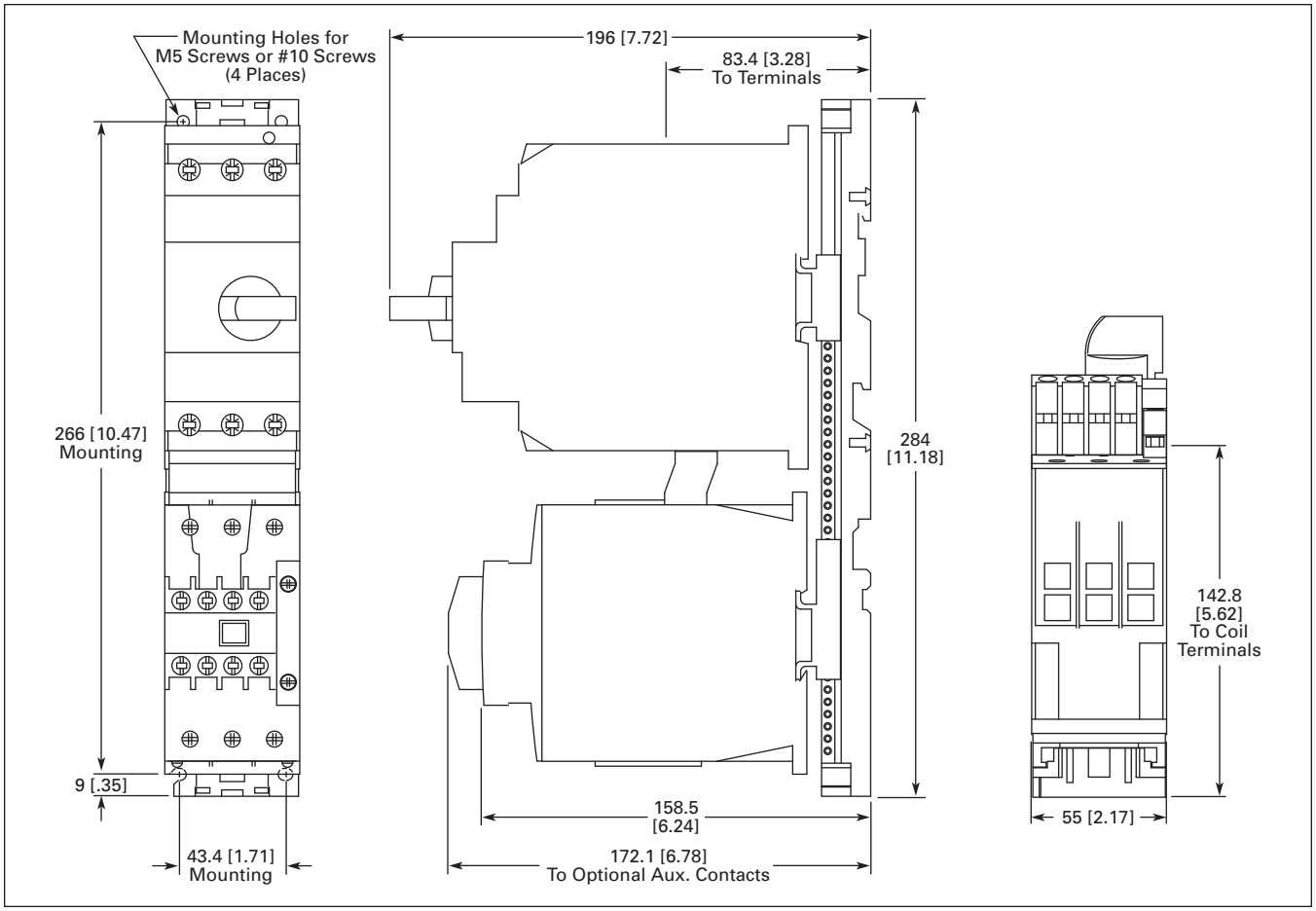

Figure 34-139. XTSC…DD_ — Approximate Dimensions in mm [in]

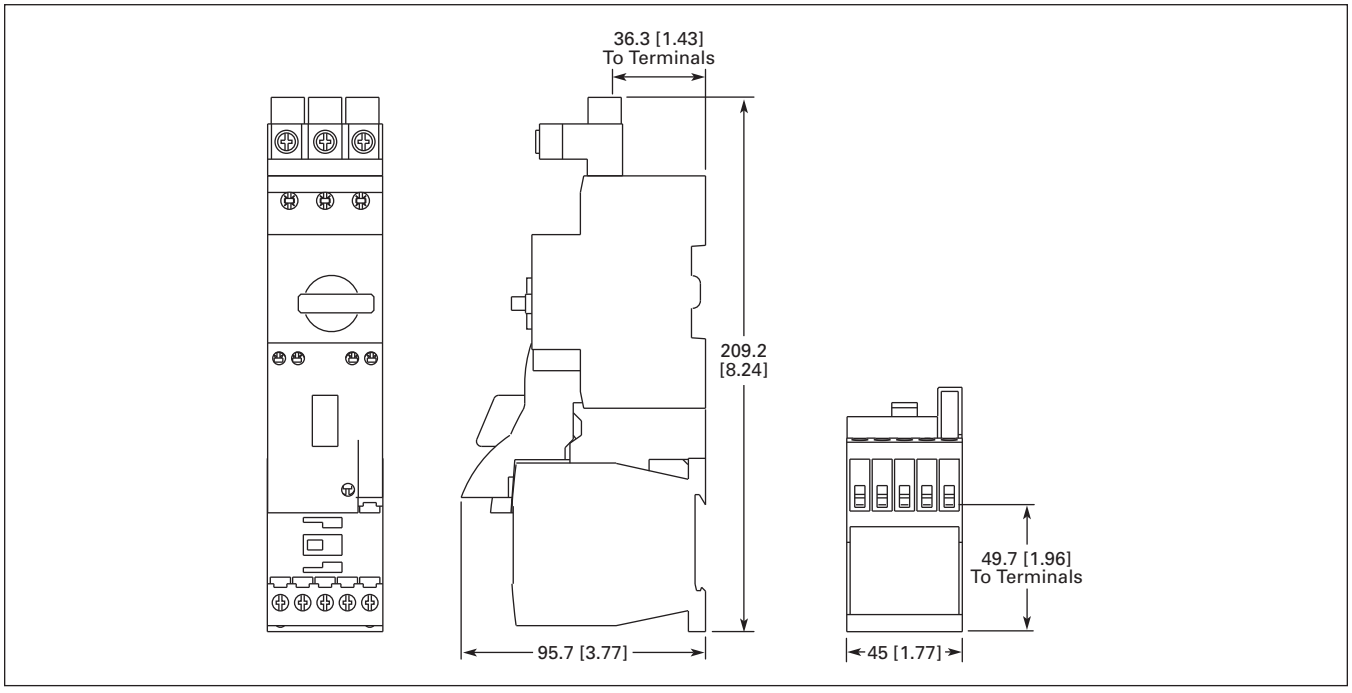

Figure 34-140. XTFC…BB_ — Approximate Dimensions in mm [in]

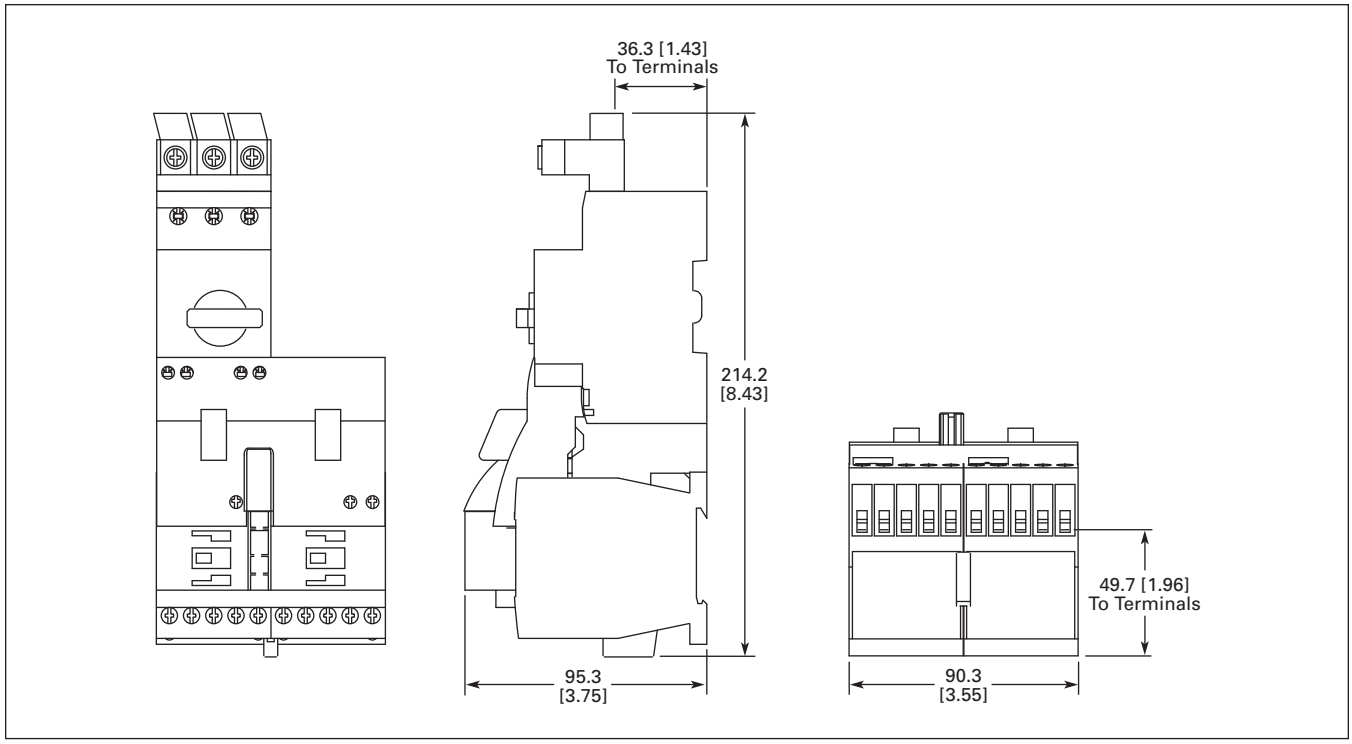

Figure 34-141. XTFR…BB_ — Approximate Dimensions in mm [in]

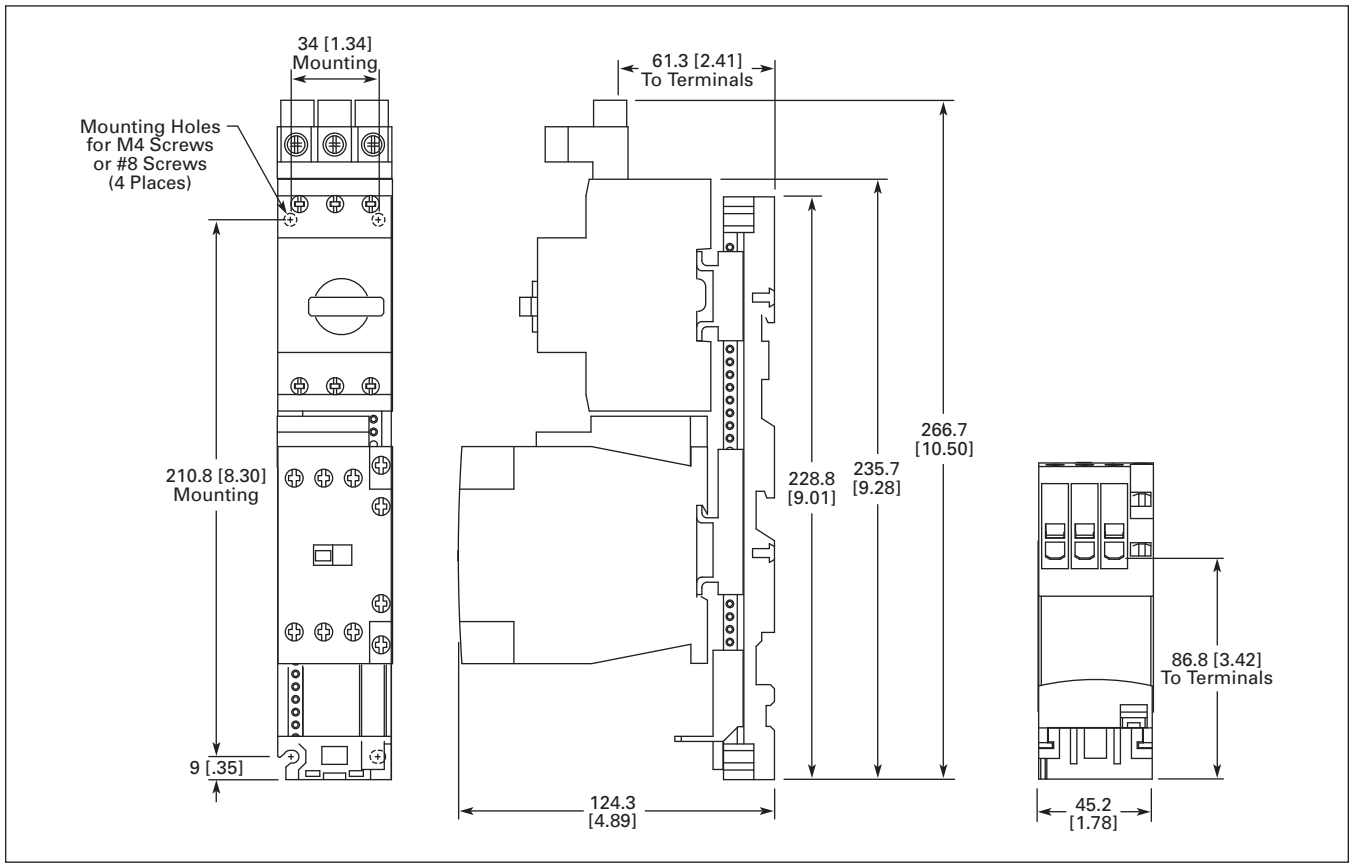

Figure 34-142. XTFC…BC_ — Approximate Dimensions in mm [in]

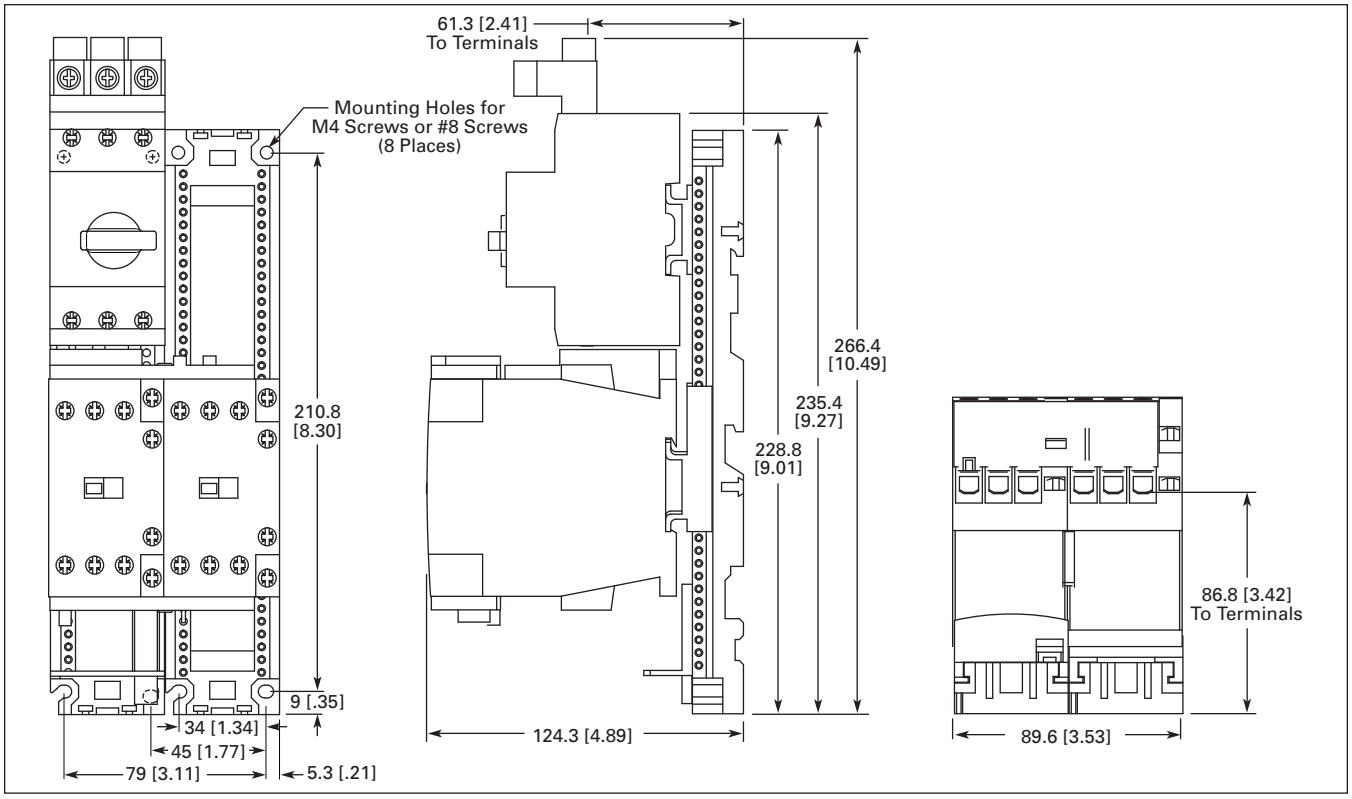

Figure 34-143. XTFR…BC_ — Approximate Dimensions in mm [in]

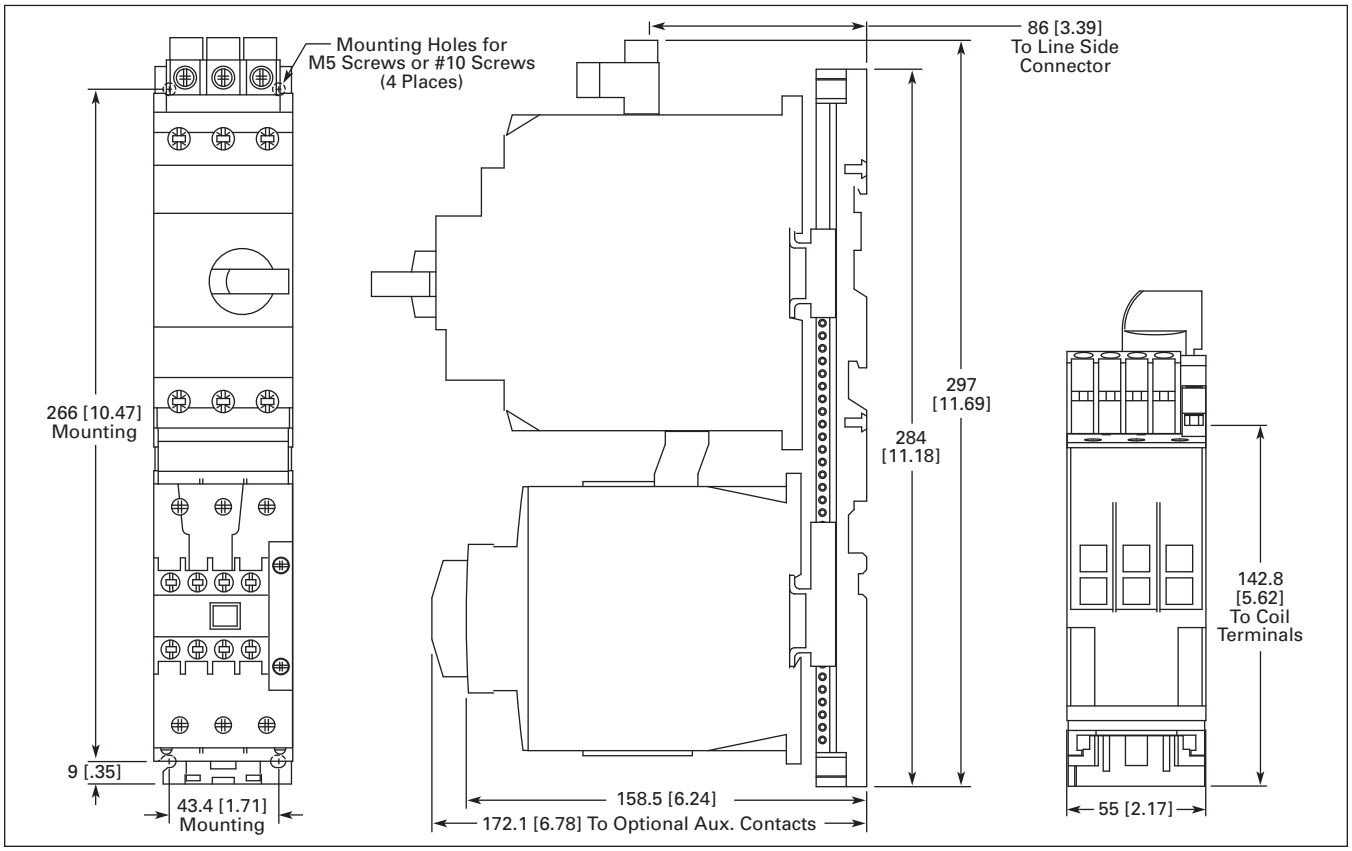

Figure 34-144. XTFC…DD_ — Approximate Dimensions in mm [in]



ECX Enclosed Control

Product Description

Eaton's Cutler-Hammer® ***XT*** Line includes IEC Contactors, Starters and Combination Motor Controllers (CMCs). Designed to meet International Standards, the Enclosed Control ***XT*** Line (ECX), carries UL and cUL certifications.

Features and Benefits

- AC control from 12V to 600V 50/60 Hz
- DC control from 12V to 220V
- Available with screw or spring cage terminals
- Reversing or non-reversing contactors and starters
- AC-3 contactor ratings to 1000A and AC-1 contactor ratings to 2000A
- Non-reversing starters to 650A
- Panel or DIN rail mounting to 65A
- IP20 finger and back-of-hand proof
- Large ambient temperature range, -25 to 50°C [-13 to 122°F]
- AC and DC controlled contactors in the same compact frame
- Low power consumption DC coils
- Built-in NO or NC auxiliary contacts to 32A
- Plug-in accessories for reduced installation time
- Nonmetallic and metallic enclosures in Types 1 (IP23), 4 (IP66), 4X (IP66), 12 (IP65) and 3R (IP32)
- Circuit breakers, fused, non-fused and non-combination designs available
- Opaque (standard) or clear covers available on nonmetallic Halyester enclosure option

Short Circuit Ratings

- Fused, Non-fused
  - 10K AIC @ 600V
- HMCP
  - 0 – 10 hp 15K AIC @ 600V
  - 15 – 125 hp 25K AIC @ 600V
- Non-combination
  - 0 – 1 hp 1K AIC @ 600V
  - 1.5 – 50 hp 5K AIC @ 600V
  - 50 – 200 hp 10K AIC @ 600V

Standards and Certifications

Note: See Enclosed Control Product Guide PG0300001E for additional information on Standards and Certifications that apply to all Cutler-Hammer Enclosed Control products.

- Fusible — with Class J fuses
  - UL Listed
  - cUL Listed ①
- Circuit Breaker HMCP/E
  - UL Listed
  - cUL Listed ①

① cUL Listing indicates appropriate CSA standard investigation.

Catalog Number Selection

Table 34-199. IEC *XT* Line Enclosed Control Catalog Numbering System

EC X 25 E 5 A A A - _ _

Design
X = ***XT*** IEC

Class		Table
09 =	Non-combination Non-reversing Starter	**34-204**
10 =	Non-combination Reversing Starter	**34-205**
11 =	Non-combination Non-reversing Starter with CPT	**34-206**
19 =	Combination Non-reversing Starter — Fusible/Non-fusible Disconnect	**34-207**
20 =	Combination Reversing Starter — Fusible/Non-fusible Disconnect	**34-208**
25 =	Combination Non-reversing Starter — Circuit Breaker	**34-209**
26 =	Combination Reversing Starter — Circuit Breaker	**34-210**

Frame Size

Combination (Class 16 – 74)	Non-combination (Class 09 – 11) Ampere Rating (UL 600V)	
IEC Size **B** – **Q**	**B** = 7A	**J** = 40A
	C = 9A	**K** = 50A
	D = 12A	**L** = 65A
	E = 15A	**M** = 80A
	F = 18A	**N** = 95A
	G = 25A	**P** = 115A
	H = 32A	**Q** = 150A

Enclosure Type/IP Ratings ①
1 = Type 1— General Purpose/IP23
3 = Type 4 — Painted Steel/IP66
4 = Type 4X — Watertight (304-Grade Stainless Steel)/IP66
5 = Type 4X — Watertight (Non-metallic)/IP66
8 = Type 12 — Dust-Tight/IP65

Coil Voltage

A =	120V	**H** =	277V
B =	240V	**L** =	380V/50 Hz
C =	480V	**Q** =	24V DC
D =	600V	**T** =	24V AC
E =	208V		

Cover Control
Type 1 Non-comb. Starters see **Table 34-201**
All Other Starters see **Table 34-202**
E22 Style Comb. Starters see **Table 34-203**

Disconnect Fuse Clip Ratings
A = None
C = 30A J
E = 60A J
G = 100A J

HMCP Ratings
A = None
B = 3A
C = 7A
D = 15A
E = 30A
F = 50A
W = 70A
G = 100A
H = 150A
J = 250A

Overload Range
See **Table 34-200**

Modification Codes
See **PG03300001E**

① See **PG03300001E** for Enclosure Type/IP Rating Cross-Reference.

Table 34-200. XTOB Overload Relays for Enclosed XT

FLA Ratings	Size B – E 7 – 15A	Size F – H 18 – 32A	Size J – L 40 – 65A	Size M – N 80 – 95A	Size P – Q 115 – 150A
0.1 – 0.16	**A**	**A**	—	—	—
0.16 – 0.24	**B**	**B**	—	—	—
0.24 – 0.4	**C**	**C**	—	—	—
0.4 – 0.6	**D**	**D**	—	—	—
0.6 – 1	**E**	**E**	—	—	—
1 – 1.6	**F**	**F**	—	—	—
1.6 – 2.4	**G**	**G**	—	—	—
2.4 – 4	**H**	**H**	—	—	—
4 – 6	**I**	**I**	—	—	—
6 – 10	**J**	**J**	**J**	—	—
9 – 12	**K**	—	—	—	—
12 – 16	**L** ②	**L**	**L**	—	—
16 – 24	—	**M**	**M**	—	—
24 – 32	—	**N**	—	—	—
24 – 40	—	—	**P**	—	—
25 – 35	—	—	—	**S**	**S**
35 – 50	—	—	—	**T**	**T**
40 – 57	—	—	**Q**	—	—
50 – 65	—	—	**R**	—	—
50 – 70	—	—	—	**U**	**U**
70 – 100	—	—	—	**V**	**V**
95 – 125	—	—	—	—	**W**

② Size B – E is 10 – 16A.

Cover Control

Non-combination Starters

Control Power Transformer (CPT) may be required.

Combination Starters

34

- Cover control for Combination Starters uses 10250T style devices as standard.
- E22 style cover control options are available (**Table 34-203**).
- Selector switches are maintained with lever operators.
- Pushbuttons are momentary type with extended pushbutton.
- The kit includes hardware and connecting wires (where possible).
- For factory installed control devices other than shown below, refer to Modification Codes, **PG03300001E**.



Type 1 Cover Control

Table 34-201. Type 1 Non-combination Cover Control

Description	Factory Installed Flange Control ①	Field Installation Kits	
	Position 9 Code	Catalog Number	Price U.S. $
Non-reversing			
No Cover Mounted Pilot Devices	**A**	**C400GK0**	
START/STOP Pushbuttons	**B**	**C400GK1**	
with Red RUN Pilot Light	**C**	**C400GK12** ②	
with Red RUN/Green OFF Lights	**D**	**C400GK16** ②	
HAND/OFF/AUTO Selector Switch	**H**	**C400GK3**	
with Red RUN Pilot Light	**J**	**C400GK32** ②	
with Red RUN/Green OFF Lights	**K**	**C400GK36** ②	
Red RUN Pilot Light	**P**	**C400GK42** ②	
Green OFF	**Q**	**C400GK41** ②	
Red RUN/Green OFF Pilot Lights	**R**	**C400GK46** ②	
Reversing			
No Cover Mounted Pilot Devices	**A**	**C400GK0**	
FOR/REV/STOP Pushbuttons	**B**	**C400GR1**	
with 2 Red Pilot Lights	**C**	**C400GR14** ②	
UP/STOP/DOWN Pushbuttons	**E**	**C400GR2**	
with 2 Red Pilot Lights	**F**	**C400GR24** ②	
Two Red Pilot Lights	**P**	**C400GK44** ②	
One Green Pilot Light	**Q**	**C400GK41** ②	

① For more available factory installed flange control, see **Table 34-202**.

② Add Code Letter from the table below to Catalog Number for voltage — Kits only. Example: C400T9**B**.

Rating	Code Letter	Rating	Code Letter	Rating	Code Letter
120V 60 Hz	**A**	277V 60 Hz	**H**	480V 60 Hz	**C**
208V 60 Hz	**E**	380V 50 Hz	**L**	600V 60 Hz	**D**
240V 60 Hz	**B**				



10250T Selector Switch

Table 34-202. Type 1 Combination and All Type 3R, 4X and 12 Cover Control ③

Description	Factory Installed Flange Control	Field Installation Kits	
	Position 9 Code	Catalog Number	Price U.S. $
Non-reversing			
No Cover Mounted Pilot Devices	**A**	—	
START/STOP Pushbuttons	**B**	**C400T1**	
with Red RUN Pilot Light	**C**	—	
with Red RUN/Green OFF Lights	**D**	—	
ON/OFF Pushbuttons	**E**	**C400T2**	
with Red RUN Pilot Light	**F**	—	
with Red RUN/Green OFF Lights	**G**	—	
HAND/OFF/AUTO Selector Switch	**H**	**C400T12**	
with Red RUN Pilot Light	**J**	—	
with Red RUN/Green OFF Lights	**K**	—	
START Pushbutton	**L**	**C400T3**	
ON Pushbutton	**M**	**C400T4**	
OFF Pushbutton	**N**	**C400T5**	
Red RUN Pilot Light	**P**	**C400T9** ④	
Green OFF	**Q**	**C400T10** ④	
Red RUN/Green OFF Pilot Lights	**R**	**C400T11** ④	
START/STOP Selector Switch	**S**	**C400T13**	
with Red RUN Pilot Light	**T**	—	
with Red RUN/Green OFF Lights	**U**	—	
ON/OFF Selector Switch	**V**	**C400T14**	
with Red RUN Pilot Light	**W**	—	
with Red RUN/Green OFF Lights	**X**	—	
Reversing			
No Cover Mounted Pilot Devices	**A**	—	
FOR/REV/STOP Pushbuttons	**B**	**C400T6**	
with 2 Red Pilot Lights	**C**	—	
with 2 Red/1 Green Pilot Lights	**D**	—	
UP/STOP/DOWN Pushbuttons	**E**	—	
with 2 Red Pilot Lights	**F**	—	
FOR/OFF/REV Selector Switch	**H**	**C400T15**	
with 2 Red Pilot Lights	**J**	—	
with 2 Red/1 Green Pilot Lights	**K**	—	
Two Red Pilot Lights	**P**	⑤	
One Green Pilot Light	**Q**	**C400T10** ④	
Two Red/One Green Pilot Lights	**R**	—	
OPEN/OFF/CLOSE Selector Switch	**V**	**C400T16**	
with 2 Red Pilot Lights	**W**	—	
with 2 Red/1 Green Pilot Lights	**X**	—	

③ For Type 1 Non-combination field installation kits, see **Table 34-201**.

④ Add Code Letter from the table below to Catalog Number for voltage — Kits only. Example: C400T9**B**.

Rating	Code Letter	Rating	Code Letter	Rating	Code Letter
120V 60 Hz	**A**	277V 60 Hz	**H**	480V 60 Hz	**C**
208V 60 Hz	**E**	380V 50 Hz	**L**	600V 60 Hz	**D**
240V 60 Hz	**B**				

⑤ Order Quantity (2) of **C400T10.**

Discount Symbol **1CD7**



E22 Selector Switch

Table 34-203. Type 1, 3R, 4X and 12 E22 Style Combination Starter Cover Control

Description	Factory Installed ①	Field Installation Kits	
	Position 9 Cover Control Code	Combination Only	
		Catalog Number	Price U.S. $
Non-reversing			
No Cover Mounted Pilot Devices	**A**	**—**	
START/STOP Pushbuttons (PB)	**B**	**CE400T01**	
START/STOP PB & Red RUN Light	**C**	**CE400T02** ②	
START/STOP PB, Red RUN, & Green STOPPED Light	**D**	**CE400T03** ②	
HAND/OFF/AUTO Selector Switch (SS)	**H**	**CE400T04**	
H-O-A SS & Red RUN Light	**J**	**CE400T05** ②	
H-O-A SS, Red RUN, & Green STOPPED Light	**K**	**CE400T06** ②	
Red RUN Pilot Light	**P**	**CE400T10** ②	
Green Off Pilot Light	**Q**	**CE400T11** ②	
Red RUN/Green OFF Pilot Light	**R**	**CE400T12** ②	
ON/OFF Selector Switch (SS)	**S**	**CE400T07**	
ON/OFF SS, Red RUN Light	**T**	**CE400T08** ②	
ON/OFF SS, Red RUN, & Green STOPPED Light	**U**	**CE400T09** ②	
Reversing			
No Cover Mounted Pilot Devices	**A**	**—**	
FWD/REV/STOP Pushbuttons (PB)	**B**	**CE400T50**	
FWD/REV/STOP PB + Red FWD & REV Lights	**C**	**CE400T51** ②	
FWD/REV/STOP PB, Red FWD/REV, & Green STOPPED	**D**	**CE400T52** ②	
FOR/OFF/REV Selector Switch (SS)	**H**	**CE400T53**	
FOR/OFF/REV SS + Red FWD & REV Lights	**J**	**CE400T54** ②	
FOR/OFF/REV SS, Red FWD/REV, & Green STOPPED	**K**	**CE400T55** ②	
OPEN/OFF/CLOSE Selector Switch (SS)	**V**	**CE400T56**	
OPEN/OFF/CLOSE SS + Red FWD & REV Lights	**W**	**CE400T57** ②	
OPEN/OFF/CLOSE SS, Red FWD/REV, & Green STOPPED	**X**	**CE400T58** ②	

① To include any of the above cover controls, place the control code character in position 9 of your Catalog Number and add Mod Code **C29**.
Example: EXE19B4A**D**A_-**C29**.
Full voltage non-reversing fusible starter with START/STOP pushbutton with red RUN and green OFF pilot lights.

② Suffix for lights (required for field installed kits only) in the table below:

Rating	Code Letter	Rating	Code Letter	Rating	Code Letter
120V 60 Hz	**A**	277V 60 Hz	**H**	480V 60 Hz	**C**
208V 60 Hz	**E**	380V 50 Hz	**L**	600V 60 Hz	**D**
240V 60 Hz	**B**				

Discount Symbol **1CD7**

34

Product Selection

Table 34-204. Class ECX09 — Non-combination Non-reversing Starter

Amps	Maximum hp ①			Coil Voltage @ 60 Hz ②	Type 1/IP23		Type 4X/IP66 ④		Type 12/IP65		Component
	Motor Voltage ⑤	1-Phase	3-Phase		Catalog Number ③	Price U.S. $	Catalog Number ③	Price U.S. $	Catalog Number ③	Price U.S. $	Catalog Number ③
Frame B											
7	115	1/4	—	120	ECX09B1AAA-_		ECX09B4AAA-_		ECX09B8AAA-_		XTAE007B10A_
	208	3/4	1-1/2	208	ECX09B1EAA-_		ECX09B4EAA-_		ECX09B8EAA-_		XTAE007B10E_
	230	1	2	240	ECX09B1BAA-_		ECX09B4BAA-_		ECX09B8BAA-_		XTAE007B10B_
	380	—	3	380/50 Hz	ECX09B1LAA-_		ECX09B4LAA-_		ECX09B8LAA-_		XTAE007B10L_
	460	—	3	480	ECX09B1CAA-_		ECX09B4CAA-_		ECX09B8CAA-_		XTAE007B10C_
	575	—	5	600	ECX09B1DAA-_		ECX09B4DAA-_		ECX09B8DAA-_		XTAE007B10D_
Frame C											
9	115	1/2	—	120	ECX09C1AAA-_		ECX09C4AAA-_		ECX09C8AAA-_		XTAE009B10A_
	208	1	2	208	ECX09C1EAA-_		ECX09C4EAA-_		ECX09C8EAA-_		XTAE009B10E_
	230	1-1/2	3	240	ECX09C1BAA-_		ECX09C4BAA-_		ECX09C8BAA-_		XTAE009B10B_
	380	—	5	380/50 Hz	ECX09C1LAA-_		ECX09C4LAA-_		ECX09C8LAA-_		XTAE009B10L_
	460	—	5	480	ECX09C1CAA-_		ECX09C4CAA-_		ECX09C8CAA-_		XTAE009B10C_
	575	—	7-1/2	600	ECX09C1DAA-_		ECX09C4DAA-_		ECX09C8DAA-_		XTAE009B10D_
Frame D											
12	115	1/2	—	120	ECX09D1AAA-_		ECX09D4AAA-_		ECX09D8AAA-_		XTAE012B10A_
	208	1-1/2	3	208	ECX09D1EAA-_		ECX09D4EAA-_		ECX09D8EAA-_		XTAE012B10E_
	230	2	3	240	ECX09D1BAA-_		ECX09D4BAA-_		ECX09D8BAA-_		XTAE012B10B_
	380	—	5	380/50 Hz	ECX09D1LAA-_		ECX09D4LAA-_		ECX09D8LAA-_		XTAE012B10L_
	460	—	7-1/2	480	ECX09D1CAA-_		ECX09D4CAA-_		ECX09D8CAA-_		XTAE012B10C_
	575	—	10	600	ECX09D1DAA-_		ECX09D4DAA-_		ECX09D8DAA-_		XTAE012B10D_
Frame E											
15	115	3/4	—	120	ECX09E1AAA-_		ECX09E4AAA-_		ECX09E8AAA-_		XTAE015B10A_
	208	2	3	208	ECX09E1EAA-_		ECX09E4EAA-_		ECX09E8EAA-_		XTAE015B10E_
	230	2	3	240	ECX09E1BAA-_		ECX09E4BAA-_		ECX09E8BAA-_		XTAE015B10B_
	380	—	5	380/50 Hz	ECX09E1LAA-_		ECX09E4LAA-_		ECX09E8LAA-_		XTAE015B10L_
	460	—	7-1/2	480	ECX09E1CAA-_		ECX09E4CAA-_		ECX09E8CAA-_		XTAE015B10C_
	575	—	10	600	ECX09E1DAA-_		ECX09E4DAA-_		ECX09E8DAA-_		XTAE015B10D_
Frame F											
18	115	2	—	120	ECX09F1AAA-_		ECX09F4AAA-_		ECX09F8AAA-_		XTAE018C10A_
	208	2	5	208	ECX09F1EAA-_		ECX09F4EAA-_		ECX09F8EAA-_		XTAE018C10E_
	230	3	5	240	ECX09F1BAA-_		ECX09F4BAA-_		ECX09F8BAA-_		XTAE018C10B_
	380	—	7-1/2	380/50 Hz	ECX09F1LAA-_		ECX09F4LAA-_		ECX09F8LAA-_		XTAE018C10L_
	460	—	10	480	ECX09F1CAA-_		ECX09F4CAA-_		ECX09F8CAA-_		XTAE018C10C_
	575	—	15	600	ECX09F1DAA-_		ECX09F4DAA-_		ECX09F8DAA-_		XTAE018C10D_
Frame G											
25	115	2	—	120	ECX09G1AAA-_		ECX09G4AAA-_		ECX09G8AAA-_		XTAE025C10A_
	208	3	7-1/2	208	ECX09G1EAA-_		ECX09G4EAA-_		ECX09G8EAA-_		XTAE025C10E_
	230	5	7-1/2	240	ECX09G1BAA-_		ECX09G4BAA-_		ECX09G8BAA-_		XTAE025C10B_
	380	—	10	380/50 Hz	ECX09G1LAA-_		ECX09G4LAA-_		ECX09G8LAA-_		XTAE025C10L_
	460	—	15	480	ECX09G1CAA-_		ECX09G4CAA-_		ECX09G8CAA-_		XTAE025C10C_
	575	—	10	600	ECX09G1DAA-_		ECX09G4DAA-_		ECX09G8DAA-_		XTAE025C10D_
Frame H											
32	115	3	—	120	ECX09H1AAA-_		ECX09H4AAA-_		ECX09H8AAA-_		XTAE032C10A_
	208	5	10	208	ECX09H1EAA-_		ECX09H4EAA-_		ECX09H8EAA-_		XTAE032C10E_
	230	5	10	240	ECX09H1BAA-_		ECX09H4BAA-_		ECX09H8BAA-_		XTAE032C10B_
	380	—	15	380/50 Hz	ECX09H1LAA-_		ECX09H4LAA-_		ECX09H8LAA-_		XTAE032C10L_
	460	—	20	480	ECX09H1CAA-_		ECX09H4CAA-_		ECX09H8CAA-_		XTAE032C10C_
	575	—	25	600	ECX09H1DAA-_		ECX09H4DAA-_		ECX09H8DAA-_		XTAE032C10D_

① 1 hp = 0.746 kW.
② Voltage is listed @ 60 Hz unless otherwise noted. Other voltages available upon request.
③ Select proper "XTOB" Overload Amperage range as per motor FLA, see **Table 34-200**.
④ These are the Catalog Numbers for Type 4X 304-Grade Stainless Steel, as indicated by the seventh digit **4**. Example: ECX09B**4**AAA-_. To order Type 4X 316-Grade Stainless Steel, change that digit to **9**. To order Type 4 Painted Steel, change that digit to **3**. To order Nonmetallic, change that digit to **5**. For details on these Alternate Enclosures, see **PG03300001E**.
⑤ Contact factory for other voltage options.

Cover Control ..... **Page 34-176**
Wiring Diagrams ..... **Page 34-192**
Dimensions **PG03300001E**
Accessories **PG03300001E**
Modification Codes **PG03300001E**
Technical Data **PG03300001E**
Discount Symbol **1CD1C**

Table 34-204. Class ECX09 — Non-combination Non-reversing Starter (Continued)

Amps	Maximum hp ①			Coil Voltage @ 60 Hz ②	Type 1/IP23		Type 4X/IP66 ④		Type 12/IP65		Component
	Motor Voltage ⑤	1-Phase	3-Phase		Catalog Number ③	Price U.S. $	Catalog Number ③	Price U.S. $	Catalog Number ③	Price U.S. $	Catalog Number ③
Frame J											
40	115	3	—	120	**ECX09J1AAA-_**		**ECX09J4AAA-_**		**ECX09J8AAA-_**		**XTAE040D00A_**
	208	5	10	208	**ECX09J1EAA-_**		**ECX09J4EAA-_**		**ECX09J8EAA-_**		**XTAE040D00E_**
	230	7-1/2	15	240	**ECX09J1BAA-_**		**ECX09J4BAA-_**		**ECX09J8BAA-_**		**XTAE040D00D_**
	380	—	15	380/50 Hz	**ECX09J1LAA-_**		**ECX09J4LAA-_**		**ECX09J8LAA-_**		**XTAE040D00L_**
	460	—	30	480	**ECX09J1CAA-_**		**ECX09J4CAA-_**		**ECX09J8CAA-_**		**XTAE040D00C_**
	575	—	40	600	**ECX09J1DAA-_**		**ECX09J4DAA-_**		**ECX09J8DAA-_**		**XTAE040D00D_**
Frame K											
50	115	3	—	120	**ECX09K1AAA-_**		**ECX09K4AAA-_**		**ECX09K8AAA-_**		**XTAE050D00A_**
	208	7-1/2	15	208	**ECX09K1EAA-_**		**ECX09K4EAA-_**		**ECX09K8EAA-_**		**XTAE050D00E_**
	230	10	20	240	**ECX09K1BAA-_**		**ECX09K4BAA-_**		**ECX09K8BAA-_**		**XTAE050D00B_**
	380	—	20	380/50 Hz	**ECX09K1LAA-_**		**ECX09K4LAA-_**		**ECX09K8LAA-_**		**XTAE050D00L_**
	460	—	40	480	**ECX09K1CAA-_**		**ECX09K4CAA-_**		**ECX09K8CAA-_**		**XTAE050D00C_**
	575	—	50	600	**ECX09K1DAA-_**		**ECX09K4DAA-_**		**ECX09K8DAA-_**		**XTAE050D00D_**
Frame L											
65	115	5	—	120	**ECX09L1AAA-_**		**ECX09L4AAA-_**		**ECX09L8AAA-_**		**XTAE065D00A_**
	208	10	20	208	**ECX09L1EAA-_**		**ECX09L4EAA-_**		**ECX09L8EAA-_**		**XTAE065D00E_**
	230	15	25	240	**ECX09L1BAA-_**		**ECX09L4BAA-_**		**ECX09L8BAA-_**		**XTAE065D00B_**
	380	—	30	380/50 Hz	**ECX09L1LAA-_**		**ECX09L4LAA-_**		**ECX09L8LAA-_**		**XTAE065D00L_**
	460	—	50	480	**ECX09L1CAA-_**		**ECX09L4CAA-_**		**ECX09L8CAA-_**		**XTAE065D00C_**
	575	—	60	600	**ECX09L1DAA-_**		**ECX09L4DAA-_**		**ECX09L8DAA-_**		**XTAE065D00D_**
Frame M											
80	115	7-1/2	—	120	**ECX09M1AAA-_**		**ECX09M4AAA-_**		**ECX09M8AAA-_**		**XTAE080F00A_**
	208	15	25	208	**ECX09M1EAA-_**		**ECX09M4EAA-_**		**ECX09M8EAA-_**		**XTAE080F00E_**
	230	15	30	240	**ECX09M1BAA-_**		**ECX09M4BAA-_**		**ECX09M8BAA-_**		**XTAE080F00B_**
	380	—	50	380/50 Hz	**ECX09M1LAA-_**		**ECX09M4LAA-_**		**ECX09M8LAA-_**		**XTAE080F00L_**
	460	—	60	480	**ECX09M1CAA-_**		**ECX09M4CAA-_**		**ECX09M8CAA-_**		**XTAE080F00C_**
	575	—	75	600	**ECX09M1DAA-_**		**ECX09M4DAA-_**		**ECX09M8DAA-_**		**XTAE080F00D_**
Frame N											
95	115	7-1/2	—	120	**ECX09N1AAA-_**		**ECX09N4AAA-_**		**ECX09N8AAA-_**		**XTAE095F00A_**
	208	15	25	208	**ECX09N1EAA-_**		**ECX09N4EAA-_**		**ECX09N8EAA-_**		**XTAE095F00E_**
	230	15	40	240	**ECX09N1BAA-_**		**ECX09N4BAA-_**		**ECX09N8BAA-_**		**XTAE095F00B_**
	380	—	60	380/50 Hz	**ECX09N1LAA-_**		**ECX09N4LAA-_**		**ECX09N8LAA-_**		**XTAE095F00L_**
	460	—	75	480	**ECX09N1CAA-_**		**ECX09N4CAA-_**		**ECX09N8CAA-_**		**XTAE095F00C_**
	575	—	100	600	**ECX09N1DAA-_**		**ECX09N4DAA-_**		**ECX09N8DAA-_**		**XTAE095F00D_**
Frame P											
115	115	10	—	120	**ECX09P1AAA-_**		**ECX09P4AAA-_**		**ECX09P8AAA-_**		**XTAE115G00A_**
	208	25	40	208	**ECX09P1EAA-_**		**ECX09P4EAA-_**		**ECX09P8EAA-_**		**XTAE115G00E_**
	230	25	50	240	**ECX09P1BAA-_**		**ECX09P4BAA-_**		**ECX09P8BAA-_**		**XTAE115G00B_**
	380	—	60	380/50 Hz	**ECX09P1LAA-_**		**ECX09P4LAA-_**		**ECX09P8LAA-_**		**XTAE115G00L_**
	460	—	100	480	**ECX09P1CAA-_**		**ECX09P4CAA-_**		**ECX09P8CAA-_**		**XTAE115G00C_**
	575	—	125	600	**ECX09P1DAA-_**		**ECX09P4DAA-_**		**ECX09P8DAA-_**		**XTAE115G00D_**
Frame Q											
150	115	15	—	120	**ECX09Q1AAA-_**		**ECX09Q4AAA-_**		**ECX09Q8AAA-_**		**XTAE150G00A_**
	208	25	40	208	**ECX09Q1EAA-_**		**ECX09Q4EAA-_**		**ECX09Q8EAA-_**		**XTAE150G00E_**
	230	30	60	240	**ECX09Q1BAA-_**		**ECX09Q4BAA-_**		**ECX09Q8BAA-_**		**XTAE150G00B_**
	380	—	60	380/50 Hz	**ECX09Q1LAA-_**		**ECX09Q4LAA-_**		**ECX09Q8LAA-_**		**XTAE150G00L_**
	460	—	125	480	**ECX09Q1CAA-_**		**ECX09Q4CAA-_**		**ECX09Q8CAA-_**		**XTAE150G00C_**
	575	—	150	600	**ECX09Q1DAA-_**		**ECX09Q4DAA-_**		**ECX09Q8DAA-_**		**XTAE150G00D_**

① 1 hp = 0.746 kW.
② Voltage is listed @ 60 Hz unless otherwise noted. Other voltages available upon request.
③ Select proper "XTOB" Overload Amperage range as per motor FLA, see **Table 34-200**.
④ These are the Catalog Numbers for Type 4X 304-Grade Stainless Steel, as indicated by the seventh digit **4**. Example: ECX10B**4**AAA-_. To order Type 4X 316-Grade Stainless Steel, change that digit to **9**. To order Type 4 Painted Steel, change that digit to **3**. To order Nonmetallic, change that digit to **5**. For details on these Alternate Enclosures, see **PG03300001E**.
⑤ Contact factory for other voltage options.

Cover Control ..... **Page 34-176**
Wiring Diagrams ..... **Page 34-192**
Dimensions **PG03300001E**
Accessories **PG03300001E**
Modification Codes **PG03300001E**
Technical Data **PG03300001E**
Discount Symbol **1CD1C**

Table 34-205. Class ECX10 — Non-combination Reversing Starter

Amps	Maximum hp ①			Coil Voltage @ 60 Hz ②	Type 1/IP23		Type 4X/IP66 ④		Type 12/IP65	Component	
	Motor Voltage ⑤	1-Phase	3-Phase		Catalog Number ③	Price U.S. $	Catalog Number ③	Price U.S. $	Catalog Number ③	Price U.S. $	Catalog Number ③
Frame B											
7	115	1/4	—	120	ECX10B1AAA-_		ECX10B4AAA-_		ECX10B8AAA-_		XTAR007B10A_
	208	3/4	1-1/2	208	ECX10B1EAA-_		ECX10B4EAA-_		ECX10B8EAA-_		XTAR007B10E_
	230	1	2	240	ECX10B1BAA-_		ECX10B4BAA-_		ECX10B8BAA-_		XTAR007B10B_
	380	—	3	380/50 Hz	ECX10B1LAA-_		ECX10B4LAA-_		ECX10B8LAA-_		XTAR007B10L_
	460	—	3	480	ECX10B1CAA-_		ECX10B4CAA-_		ECX10B8CAA-_		XTAR007B10C_
	575	—	5	600	ECX10B1DAA-_		ECX10B4DAA-_		ECX10B8DAA-_		XTAR007B10D_
Frame C											
9	115	1/2	—	120	ECX10C1AAA-_		ECX10C4AAA-_		ECX10C8AAA-_		XTAR009B10A_
	208	1	2	208	ECX10C1EAA-_		ECX10C4EAA-_		ECX10C8EAA-_		XTAR009B10E_
	230	1-1/2	3	240	ECX10C1BAA-_		ECX10C4BAA-_		ECX10C8BAA-_		XTAR009B10B_
	380	—	5	380/50 Hz	ECX10C1LAA-_		ECX10C4LAA-_		ECX10C8LAA-_		XTAR009B10L_
	460	—	5	480	ECX10C1CAA-_		ECX10C4CAA-_		ECX10C8CAA-_		XTAR009B10C_
	575	—	7-1/2	600	ECX10C1DAA-_		ECX10C4DAA-_		ECX10C8DAA-_		XTAR009B10D_
Frame D											
12	115	1/2	—	120	ECX10D1AAA-_		ECX10D4AAA-_		ECX10D8AAA-_		XTAR012B10A_
	208	1-1/2	3	208	ECX10D1EAA-_		ECX10D4EAA-_		ECX10D8EAA-_		XTAR012B10E_
	230	2	3	240	ECX10D1BAA-_		ECX10D4BAA-_		ECX10D8BAA-_		XTAR012B10B_
	380	—	5	380/50 Hz	ECX10D1LAA-_		ECX10D4LAA-_		ECX10D8LAA-_		XTAR012B10L_
	460	—	7-1/2	480	ECX10D1CAA-_		ECX10D4CAA-_		ECX10D8CAA-_		XTAR012B10C_
	575	—	10	600	ECX10D1DAA-_		ECX10D4DAA-_		ECX10D8DAA-_		XTAR012B10D_
Frame E											
15	115	3/4	—	120	ECX10E1AAA-_		ECX10E4AAA-_		ECX10E8AAA-_		XTAR015B10A_
	208	2	3	208	ECX10E1EAA-_		ECX10E4EAA-_		ECX10E8EAA-_		XTAR015B10E_
	230	2	3	240	ECX10E1BAA-_		ECX10E4BAA-_		ECX10E8BAA-_		XTAR015B10B_
	380	—	5	380/50 Hz	ECX10E1LAA-_		ECX10E4LAA-_		ECX10E8LAA-_		XTAR015B10L_
	460	—	7-1/2	480	ECX10E1CAA-_		ECX10E4CAA-_		ECX10E8CAA-_		XTAR015B10C_
	575	—	10	600	ECX10E1DAA-_		ECX10E4DAA-_		ECX10E8DAA-_		XTAR015B10D_
Frame F											
18	115	2	—	120	ECX10F1AAA-_		ECX10F4AAA-_		ECX10F8AAA-_		XTAR018C10A_
	208	2	5	208	ECX10F1EAA-_		ECX10F4EAA-_		ECX10F8EAA-_		XTAR018C10E_
	230	3	5	240	ECX10F1BAA-_		ECX10F4BAA-_		ECX10F8BAA-_		XTAR018C10B_
	380	—	7-1/2	380/50 Hz	ECX10F1LAA-_		ECX10F4LAA-_		ECX10F8LAA-_		XTAR018C10L_
	460	—	10	480	ECX10F1CAA-_		ECX10F4CAA-_		ECX10F8CAA-_		XTAR018C10C_
	575	—	15	600	ECX10F1DAA-_		ECX10F4DAA-_		ECX10F8DAA-_		XTAR018C10D_
Frame G											
25	115	2	—	120	ECX10G1AAA-_		ECX10G4AAA-_		ECX10G8AAA-_		XTAR025C10A_
	208	3	7-1/2	208	ECX10G1EAA-_		ECX10G4EAA-_		ECX10G8EAA-_		XTAR025C10E_
	230	5	7-1/2	240	ECX10G1BAA-_		ECX10G4BAA-_		ECX10G8BAA-_		XTAR025C10B_
	380	—	10	380/50 Hz	ECX10G1LAA-_		ECX10G4LAA-_		ECX10G8LAA-_		XTAR025C10L_
	460	—	15	480	ECX10G1CAA-_		ECX10G4CAA-_		ECX10G8CAA-_		XTAR025C10C_
	575	—	10	600	ECX10G1DAA-_		ECX10G4DAA-_		ECX10G8DAA-_		XTAR025C10D_
Frame H											
32	115	3	—	120	ECX10H1AAA-_		ECX10H4AAA-_		ECX10H8AAA-_		XTAR032C10A_
	208	5	10	208	ECX10H1EAA-_		ECX10H4EAA-_		ECX10H8EAA-_		XTAR032C10E_
	230	5	10	240	ECX10H1BAA-_		ECX10H4BAA-_		ECX10H8BAA-_		XTAR032C10B_
	380	—	15	380/50 Hz	ECX10H1LAA-_		ECX10H4LAA-_		ECX10H8LAA-_		XTAR032C10L_
	460	—	20	480	ECX10H1CAA-_		ECX10H4CAA-_		ECX10H8CAA-_		XTAR032C10C_
	575	—	25	600	ECX10H1DAA-_		ECX10H4DAA-_		ECX10H8DAA-_		XTAR032C10D_

① 1 hp = 0.746 kW.
② Voltage is listed @ 60 Hz unless otherwise noted. Other voltages available upon request.
③ Select proper "XTOB" Overload Amperage range as per motor FLA, see **Table 34-200**.
④ These are the Catalog Numbers for Type 4X 304-Grade Stainless Steel, as indicated by the seventh digit **4**. Example: ECX10B**4**AAA-_. To order Type 4X 316-Grade Stainless Steel, change that digit to **9**. To order Type 4 Painted Steel, change that digit to **3**. To order Nonmetallic, change that digit to **5**. For details on these Alternate Enclosures, see **PG03300001E**.
⑤ Contact factory for other voltage options.

Cover Control ..... **Page 34-176**
Wiring Diagrams ..... **Page 34-192**
Dimensions **PG03300001E**
Accessories **PG03300001E**
Modification Codes **PG03300001E**
Technical Data **PG03300001E**
Discount Symbol **1CD1C**

Table 34-205. Class ECX10 — Non-combination Reversing Starter (Continued)

Amps	Maximum hp ①			Coil Voltage @ 60 Hz ②	Type 1/IP23		Type 4X/IP66 ④		Type 12/IP65		Component
	Motor Voltage ⑤	1-Phase	3-Phase		Catalog Number ③	Price U.S. $	Catalog Number ③	Price U.S. $	Catalog Number ③	Price U.S. $	Catalog Number ③
Frame J											
40	115	3	—	120	**ECX10J1AAA-_**		**ECX10J4AAA-_**		**ECX10J8AAA-_**		**XTAR040D00A_**
	208	5	10	208	**ECX10J1EAA-_**		**ECX10J4EAA-_**		**ECX10J8EAA-_**		**XTAR040D00E_**
	230	7-1/2	15	240	**ECX10J1BAA-_**		**ECX10J4BAA-_**		**ECX10J8BAA-_**		**XTAR040D00B_**
	380	—	15	380/50 Hz	**ECX10J1LAA-_**		**ECX10J4LAA-_**		**ECX10J8LAA-_**		**XTAR040D00L_**
	460	—	30	480	**ECX10J1CAA-_**		**ECX10J4CAA-_**		**ECX10J8CAA-_**		**XTAR040D00C_**
	575	—	40	600	**ECX10J1DAA-_**		**ECX10J4DAA-_**		**ECX10J8DAA-_**		**XTAR040D00D_**
Frame K											
50	115	3	—	120	**ECX10K1AAA-_**		**ECX10K4AAA-_**		**ECX10K8AAA-_**		**XTAR050D00A_**
	208	7-1/2	15	208	**ECX10K1EAA-_**		**ECX10K4EAA-_**		**ECX10K8EAA-_**		**XTAR050D00E_**
	230	10	20	240	**ECX10K1BAA-_**		**ECX10K4BAA-_**		**ECX10K8BAA-_**		**XTAR050D00B_**
	380	—	20	380/50 Hz	**ECX10K1LAA-_**		**ECX10K4LAA-_**		**ECX10K8LAA-_**		**XTAR050D00L_**
	460	—	40	480	**ECX10K1CAA-_**		**ECX10K4CAA-_**		**ECX10K8CAA-_**		**XTAR050D00C_**
	575	—	50	600	**ECX10K1DAA-_**		**ECX10K4DAA-_**		**ECX10K8DAA-_**		**XTAR050D00D_**
Frame L											
65	115	5	—	120	**ECX10L1AAA-_**		**ECX10L4AAA-_**		**ECX10L8AAA-_**		**XTAR065D00A_**
	208	10	20	208	**ECX10L1EAA-_**		**ECX10L4EAA-_**		**ECX10L8EAA-_**		**XTAR065D00E_**
	230	15	25	240	**ECX10L1BAA-_**		**ECX10L4BAA-_**		**ECX10L8BAA-_**		**XTAR065D00B_**
	380	—	30	380/50 Hz	**ECX10L1LAA-_**		**ECX10L4LAA-_**		**ECX10L8LAA-_**		**XTAR065D00L_**
	460	—	50	480	**ECX10L1CAA-_**		**ECX10L4CAA-_**		**ECX10L8CAA-_**		**XTAR065D00C_**
	575	—	60	600	**ECX10L1DAA-_**		**ECX10L4DAA-_**		**ECX10L8DAA-_**		**XTAR065D00D_**
Frame M											
80	115	7-1/2	—	120	**ECX10M1AAA-_**		**ECX10M4AAA-_**		**ECX10M8AAA-_**		**XTAR080F00A_**
	208	15	25	208	**ECX10M1EAA-_**		**ECX10M4EAA-_**		**ECX10M8EAA-_**		**XTAR080F00E_**
	230	15	30	240	**ECX10M1BAA-_**		**ECX10M4BAA-_**		**ECX10M8BAA-_**		**XTAR080F00B_**
	380	—	50	380/50 Hz	**ECX10M1LAA-_**		**ECX10M4LAA-_**		**ECX10M8LAA-_**		**XTAR080F00L_**
	460	—	60	480	**ECX10M1CAA-_**		**ECX10M4CAA-_**		**ECX10M8CAA-_**		**XTAR080F00C_**
	575	—	75	600	**ECX10M1DAA-_**		**ECX10M4DAA-_**		**ECX10M8DAA-_**		**XTAR080F00D_**
Frame N											
95	115	7-1/2	—	120	**ECX10N1AAA-_**		**ECX10N4AAA-_**		**ECX10N8AAA-_**		**XTAR095F00A_**
	208	15	25	208	**ECX10N1EAA-_**		**ECX10N4EAA-_**		**ECX10N8EAA-_**		**XTAR095F00E_**
	230	15	40	240	**ECX10N1BAA-_**		**ECX10N4BAA-_**		**ECX10N8BAA-_**		**XTAR095F00B_**
	380	—	60	380/50 Hz	**ECX10N1LAA-_**		**ECX10N4LAA-_**		**ECX10N8LAA-_**		**XTAR095F00L_**
	460	—	75	480	**ECX10N1CAA-_**		**ECX10N4CAA-_**		**ECX10N8CAA-_**		**XTAR095F00C_**
	575	—	100	600	**ECX10N1DAA-_**		**ECX10N4DAA-_**		**ECX10N8DAA-_**		**XTAR095F00D_**
Frame P											
115	115	10	—	120	**ECX10P1AAA-_**		**ECX10P4AAA-_**		**ECX10P8AAA-_**		**XTAR115G00A_**
	208	25	40	208	**ECX10P1EAA-_**		**ECX10P4EAA-_**		**ECX10P8EAA-_**		**XTAR115G00E_**
	230	25	50	240	**ECX10P1BAA-_**		**ECX10P4BAA-_**		**ECX10P8BAA-_**		**XTAR115G00B_**
	380	—	60	380/50 Hz	**ECX10P1LAA-_**		**ECX10P4LAA-_**		**ECX10P8LAA-_**		**XTAR115G00L_**
	460	—	100	480	**ECX10P1CAA-_**		**ECX10P4CAA-_**		**ECX10P8CAA-_**		**XTAR115G00C_**
	575	—	125	600	**ECX10P1DAA-_**		**ECX10P4DAA-_**		**ECX10P8DAA-_**		**XTAR115G00D_**
Frame Q											
150	115	15	—	120	**ECX10Q1AAA-_**		**ECX10Q4AAA-_**		**ECX10Q8AAA-_**		**XTAR150G00A_**
	208	25	40	208	**ECX10Q1EAA-_**		**ECX10Q4EAA-_**		**ECX10Q8EAA-_**		**XTAR150G00E_**
	230	30	60	240	**ECX10Q1BAA-_**		**ECX10Q4BAA-_**		**ECX10Q8BAA-_**		**XTAR150G00B_**
	380	—	60	380/50 Hz	**ECX10Q1LAA-_**		**ECX10Q4LAA-_**		**ECX10Q8LAA-_**		**XTAR150G00L_**
	460	—	125	480	**ECX10Q1CAA-_**		**ECX10Q4CAA-_**		**ECX10Q8CAA-_**		**XTAR150G00C_**
	575	—	150	600	**ECX10Q1DAA-_**		**ECX10Q4DAA-_**		**ECX10Q8DAA-_**		**XTAR150G00D_**

① 1 hp = 0.746 kW.
② Voltage is listed @ 60 Hz unless otherwise noted. Other voltages available upon request.
③ Select proper "XTOB" Overload Amperage range as per motor FLA, see **Table 34-200**.
④ These are the Catalog Numbers for Type 4X 304-Grade Stainless Steel, as indicated by the seventh digit **4**. Example: ECX10B**4**AAA-_. To order Type 4X 316-Grade Stainless Steel, change that digit to **9**. To order Type 4 Painted Steel, change that digit to **3**. To order Nonmetallic, change that digit to **5**. For details on these Alternate Enclosures, see **PG03300001E**.
⑤ Contact factory for other voltage options.

Cover Control ..... **Page 34-176**
Wiring Diagrams ..... **Page 34-192**
Dimensions **PG03300001E**
Accessories **PG03300001E**
Modification Codes **PG03300001E**
Technical Data **PG03300001E**
Discount Symbol **1CD1C**

34

Table 34-206. Class ECX11 — Non-combination Non-reversing Starter with CPT

Amps	Maximum hp ①			Coil Voltage @ 60 Hz ②	Type 1/IP23		Type 4X/IP66 ④		Type 12/IP65		Component
	Motor Voltage ⑤	1-Phase	3-Phase		Catalog Number ③	Price U.S. $	Catalog Number ③	Price U.S. $	Catalog Number ③	Price U.S. $	Catalog Number ③
Frame B											
7	115	1/4	—	120	**ECX11B1AAA-_**		**ECX11B4AAA-_**		**ECX11B8AAA-_**		**XTAE007B10A_**
	208	3/4	1-1/2	208	**ECX11B1EAA-_**		**ECX11B4EAA-_**		**ECX11B8EAA-_**		**XTAE007B10E_**
	230	1	2	240	**ECX11B1BAA-_**		**ECX11B4BAA-_**		**ECX11B8BAA-_**		**XTAE007B10B_**
	380	—	3	380/50 Hz	**ECX11B1LAA-_**		**ECX11B4LAA-_**		**ECX11B8LAA-_**		**XTAE007B10L_**
	460	—	3	480	**ECX11B1CAA-_**		**ECX11B4CAA-_**		**ECX11B8CAA-_**		**XTAE007B10C_**
	575	—	5	600	**ECX11B1DAA-_**		**ECX11B4DAA-_**		**ECX11B8DAA-_**		**XTAE007B10D_**
Frame C											
9	115	1/2	—	120	**ECX11C1AAA-_**		**ECX11C4AAA-_**		**ECX11C8AAA-_**		**XTAE009B10A_**
	208	1	2	208	**ECX11C1EAA-_**		**ECX11C4EAA-_**		**ECX11C8EAA-_**		**XTAE009B10E_**
	230	1-1/2	3	240	**ECX11C1BAA-_**		**ECX11C4BAA-_**		**ECX11C8BAA-_**		**XTAE009B10B_**
	380	—	5	380/50 Hz	**ECX11C1LAA-_**		**ECX11C4LAA-_**		**ECX11C8LAA-_**		**XTAE009B10L_**
	460	—	5	480	**ECX11C1CAA-_**		**ECX11C4CAA-_**		**ECX11C8CAA-_**		**XTAE009B10C_**
	575	—	7-1/2	600	**ECX11C1DAA-_**		**ECX11C4DAA-_**		**ECX11C8DAA-_**		**XTAE009B10D_**
Frame D											
12	115	1/2	—	120	**ECX11D1AAA-_**		**ECX11D4AAA-_**		**ECX11D8AAA-_**		**XTAE012B10A_**
	208	1-1/2	3	208	**ECX11D1EAA-_**		**ECX11D4EAA-_**		**ECX11D8EAA-_**		**XTAE012B10E_**
	230	2	3	240	**ECX11D1BAA-_**		**ECX11D4BAA-_**		**ECX11D8BAA-_**		**XTAE012B10B_**
	380	—	5	380/50 Hz	**ECX11D1LAA-_**		**ECX11D4LAA-_**		**ECX11D8LAA-_**		**XTAE012B10L_**
	460	—	7-1/2	480	**ECX11D1CAA-_**		**ECX11D4CAA-_**		**ECX11D8CAA-_**		**XTAE012B10C_**
	575	—	10	600	**ECX11D1DAA-_**		**ECX11D4DAA-_**		**ECX11D8DAA-_**		**XTAE012B10D_**
Frame E											
15	115	3/4	—	120	**ECX11E1AAA-_**		**ECX11E4AAA-_**		**ECX11E8AAA-_**		**XTAE015B10A_**
	208	2	3	208	**ECX11E1EAA-_**		**ECX11E4EAA-_**		**ECX11E8EAA-_**		**XTAE015B10E_**
	230	2	3	240	**ECX11E1BAA-_**		**ECX11E4BAA-_**		**ECX11E8BAA-_**		**XTAE015B10B_**
	380	—	5	380/50 Hz	**ECX11E1LAA-_**		**ECX11E4LAA-_**		**ECX11E8LAA-_**		**XTAE015B10L_**
	460	—	7-1/2	480	**ECX11E1CAA-_**		**ECX11E4CAA-_**		**ECX11E8CAA-_**		**XTAE015B10C_**
	575	—	10	600	**ECX11E1DAA-_**		**ECX11E4DAA-_**		**ECX11E8DAA-_**		**XTAE015B10D_**
Frame F											
18	115	2	—	120	**ECX11F1AAA-_**		**ECX11F4AAA-_**		**ECX11F8AAA-_**		**XTAE018C10A_**
	208	2	5	208	**ECX11F1EAA-_**		**ECX11F4EAA-_**		**ECX11F8EAA-_**		**XTAE018C10E_**
	230	3	5	240	**ECX11F1BAA-_**		**ECX11F4BAA-_**		**ECX11F8BAA-_**		**XTAE018C10B_**
	380	—	7-1/2	380/50 Hz	**ECX11F1LAA-_**		**ECX11F4LAA-_**		**ECX11F8LAA-_**		**XTAE018C10L_**
	460	—	10	480	**ECX11F1CAA-_**		**ECX11F4CAA-_**		**ECX11F8CAA-_**		**XTAE018C10C_**
	575	—	15	600	**ECX11F1DAA-_**		**ECX11F4DAA-_**		**ECX11F8DAA-_**		**XTAE018C10D_**
Frame G											
25	115	2	—	120	**ECX11G1AAA-_**		**ECX11G4AAA-_**		**ECX11G8AAA-_**		**XTAE025C10A_**
	208	3	7-1/2	208	**ECX11G1EAA-_**		**ECX11G4EAA-_**		**ECX11G8EAA-_**		**XTAE025C10E_**
	230	5	7-1/2	240	**ECX11G1BAA-_**		**ECX11G4BAA-_**		**ECX11G8BAA-_**		**XTAE025C10B_**
	380	—	10	380/50 Hz	**ECX11G1LAA-_**		**ECX11G4LAA-_**		**ECX11G8LAA-_**		**XTAE025C10L_**
	460	—	15	480	**ECX11G1CAA-_**		**ECX11G4CAA-_**		**ECX11G8CAA-_**		**XTAE025C10C_**
	575	—	20	600	**ECX11G1DAA-_**		**ECX11G4DAA-_**		**ECX11G8DAA-_**		**XTAE025C10D_**
Frame H											
32	115	3	—	120	**ECX11H1AAA-_**		**ECX11H4AAA-_**		**ECX11H8AAA-_**		**XTAE032C10A_**
	208	5	10	208	**ECX11H1EAA-_**		**ECX11H4EAA-_**		**ECX11H8EAA-_**		**XTAE032C10E_**
	230	5	10	240	**ECX11H1BAA-_**		**ECX11H4BAA-_**		**ECX11H8BAA-_**		**XTAE032C10B_**
	380	—	15	380/50 Hz	**ECX11H1LAA-_**		**ECX11H4LAA-_**		**ECX11H8LAA-_**		**XTAE032C10L_**
	460	—	20	480	**ECX11H1CAA-_**		**ECX11H4CAA-_**		**ECX11H8CAA-_**		**XTAE032C10C_**
	575	—	25	600	**ECX11H1DAA-_**		**ECX11H4DAA-_**		**ECX11H8DAA-_**		**XTAE032C10D_**

① 1 hp = 0.746 kW.

② Voltage is listed @ 60 Hz unless otherwise noted. Other voltages available upon request.

③ Select proper "XTOB" Overload Amperage range as per motor FLA, see **Table 34-200**.

④ These are the Catalog Numbers for Type 4X 304-Grade Stainless Steel, as indicated by the seventh digit **4**. Example: ECX11B**4**AAA-_. To order Type 4X 316-Grade Stainless Steel, change that digit to **9**. To order Type 4 Painted Steel, change that digit to **3**. To order Nonmetallic, change that digit to **5**. For details on these Alternate Enclosures, see **PG03300001E**.

⑤ Contact factory for other voltage options.

Cover Control ..... **Page 34-176**
Wiring Diagrams ..... **Page 34-192**
Dimensions **PG03300001E**
Accessories **PG03300001E**
Modification Codes **PG03300001E**
Technical Data **PG03300001E**
Discount Symbol **1CD1C**

Table 34-206. Class ECX11 — Non-combination Non-reversing Starter with CPT (Continued)

Amps	Maximum hp ①			Coil Voltage @ 60 Hz ②	Type 1/IP23		Type 4X/IP66 ④		Type 12/IP65		Component
	Motor Voltage ⑤	1-Phase	3-Phase		Catalog Number ③	Price U.S. $	Catalog Number ③	Price U.S. $	Catalog Number ③	Price U.S. $	Catalog Number ③
Frame J											
40	115	3	—	120	**ECX11J1AAA-_**		**ECX11J4AAA-_**		**ECX11J8AAA-_**		**XTAE040D00A_**
	208	5	10	208	**ECX11J1EAA-_**		**ECX11J4EAA-_**		**ECX11J8EAA-_**		**XTAE040D00E_**
	230	7-1/2	15	240	**ECX11J1BAA-_**		**ECX11J4BAA-_**		**ECX11J8BAA-_**		**XTAE040D00B_**
	380	—	15	380/50 Hz	**ECX11J1LAA-_**		**ECX11J4LAA-_**		**ECX11J8LAA-_**		**XTAE040D00L_**
	460	—	30	480	**ECX11J1CAA-_**		**ECX11J4CAA-_**		**ECX11J8CAA-_**		**XTAE040D00C_**
	575	—	40	600	**ECX11J1DAA-_**		**ECX11J4DAA-_**		**ECX11J8DAA-_**		**XTAE040D00D_**
Frame K											
50	115	3	—	120	**ECX11K1AAA-_**		**ECX11K4AAA-_**		**ECX11K8AAA-_**		**XTAE050D00A_**
	208	7-1/2	15	208	**ECX11K1EAA-_**		**ECX11K4EAA-_**		**ECX11K8EAA-_**		**XTAE050D00E_**
	230	10	20	240	**ECX11K1BAA-_**		**ECX11K4BAA-_**		**ECX11K8BAA-_**		**XTAE050D00B_**
	380	—	20	380/50 Hz	**ECX11K1LAA-_**		**ECX11K4LAA-_**		**ECX11K8LAA-_**		**XTAE050D00L_**
	460	—	40	480	**ECX11K1CAA-_**		**ECX11K4CAA-_**		**ECX11K8CAA-_**		**XTAE050D00C_**
	575	—	50	600	**ECX11K1DAA-_**		**ECX11K4DAA-_**		**ECX11K8DAA-_**		**XTAE050D00D_**
Frame L											
65	115	5	—	120	**ECX11L1AAA-_**		**ECX11L4AAA-_**		**ECX11L8AAA-_**		**XTAE065D00A_**
	208	10	20	208	**ECX11L1EAA-_**		**ECX11L4EAA-_**		**ECX11L8EAA-_**		**XTAE065D00E_**
	230	15	25	240	**ECX11L1BAA-_**		**ECX11L4BAA-_**		**ECX11L8BAA-_**		**XTAE065D00B_**
	380	—	30	380/50 Hz	**ECX11L1LAA-_**		**ECX11L4LAA-_**		**ECX11L8LAA-_**		**XTAE065D00L_**
	460	—	50	480	**ECX11L1CAA-_**		**ECX11L4CAA-_**		**ECX11L8CAA-_**		**XTAE065D00C_**
	575	—	60	600	**ECX11L1DAA-_**		**ECX11L4DAA-_**		**ECX11L8DAA-_**		**XTAE065D00D_**
Frame M											
80	115	7-1/2	—	120	**ECX11M1AAA-_**		**ECX11M4AAA-_**		**ECX11M8AAA-_**		**XTAE080F00A_**
	208	15	25	208	**ECX11M1EAA-_**		**ECX11M4EAA-_**		**ECX11M8EAA-_**		**XTAE080F00E_**
	230	15	30	240	**ECX11M1BAA-_**		**ECX11M4BAA-_**		**ECX11M8BAA-_**		**XTAE080F00B_**
	380	—	50	380/50 Hz	**ECX11M1LAA-_**		**ECX11M4LAA-_**		**ECX11M8LAA-_**		**XTAE080F00L_**
	460	—	60	480	**ECX11M1CAA-_**		**ECX11M4CAA-_**		**ECX11M8CAA-_**		**XTAE080F00C_**
	575	—	75	600	**ECX11M1DAA-_**		**ECX11M4DAA-_**		**ECX11M8DAA-_**		**XTAE080F00D_**
Frame N											
95	115	7-1/2	—	120	**ECX11N1AAA-_**		**ECX11N4AAA-_**		**ECX11N8AAA-_**		**XTAE095F00A_**
	208	15	25	208	**ECX11N1EAA-_**		**ECX11N4EAA-_**		**ECX11N8EAA-_**		**XTAE095F00E_**
	230	15	40	240	**ECX11N1BAA-_**		**ECX11N4BAA-_**		**ECX11N8BAA-_**		**XTAE095F00B_**
	380	—	60	380/50 Hz	**ECX11N1LAA-_**		**ECX11N4LAA-_**		**ECX11N8LAA-_**		**XTAE095F00L_**
	460	—	75	480	**ECX11N1CAA-_**		**ECX11N4CAA-_**		**ECX11N8CAA-_**		**XTAE095F00C_**
	575	—	100	600	**ECX11N1DAA-_**		**ECX11N4DAA-_**		**ECX11N8DAA-_**		**XTAE095F00D_**
Frame P											
115	115	10	—	120	**ECX11P1AAA-_**		**ECX11P4AAA-_**		**ECX11P8AAA-_**		**XTAE115G00A_**
	208	25	40	208	**ECX11P1EAA-_**		**ECX11P4EAA-_**		**ECX11P8EAA-_**		**XTAE115G00E_**
	230	25	50	240	**ECX11P1BAA-_**		**ECX11P4BAA-_**		**ECX11P8BAA-_**		**XTAE115G00B_**
	380	—	60	380/50 Hz	**ECX11P1LAA-_**		**ECX11P4LAA-_**		**ECX11P8LAA-_**		**XTAE115G00L_**
	460	—	100	480	**ECX11P1CAA-_**		**ECX11P4CAA-_**		**ECX11P8CAA-_**		**XTAE115G00C_**
	575	—	125	600	**ECX11P1DAA-_**		**ECX11P4DAA-_**		**ECX11P8DAA-_**		**XTAE115G00D_**
Frame Q											
150	115	15	—	120	**ECX11Q1AAA-_**		**ECX11Q4AAA-_**		**ECX11Q8AAA-_**		**XTAE150G00A_**
	208	25	40	208	**ECX11Q1EAA-_**		**ECX11Q4EAA-_**		**ECX11Q8EAA-_**		**XTAE150G00E_**
	230	30	60	240	**ECX11Q1BAA-_**		**ECX11Q4BAA-_**		**ECX11Q8BAA-_**		**XTAE150G00B_**
	380	—	60	380/50 Hz	**ECX11Q1LAA-_**		**ECX11Q4LAA-_**		**ECX11Q8LAA-_**		**XTAE150G00L_**
	460	—	125	480	**ECX11Q1CAA-_**		**ECX11Q4CAA-_**		**ECX11Q8CAA-_**		**XTAE150G00C_**
	575	—	150	600	**ECX11Q1DAA-_**		**ECX11Q4DAA-_**		**ECX11Q8DAA-_**		**XTAE150G00D_**

① 1 hp = 0.746 kW.
② Voltage is listed @ 60 Hz unless otherwise noted. Other voltages available upon request.
③ Select proper "XTOB" Overload Amperage range as per motor FLA, see **Table 34-200**.
④ These are the Catalog Numbers for Type 4X 304-Grade Stainless Steel, as indicated by the seventh digit **4**. Example: ECX11B**4**AAA-_. To order Type 4X 316-Grade Stainless Steel, change that digit to **9**. To order Type 4 Painted Steel, change that digit to **3**. To order Nonmetallic, change that digit to **5**. For details on these Alternate Enclosures, see **PG03300001E**.
⑤ Contact factory for other voltage options.

Cover Control ..... **Page 34-176**
Wiring Diagrams ..... **Page 34-192**
Dimensions **PG03300001E**
Accessories **PG03300001E**
Modification Codes **PG03300001E**
Technical Data **PG03300001E**
Discount Symbol **1CD1C**

34

Table 34-207. Class ECX19 — Combination Non-reversing Starter — Fusible/Non-fusible Disconnect

Amps	Maximum hp ①			Coil Voltage @ 60 Hz ②	Fuse Clips	Type 1/IP23		Type 4X/IP66 ④		Type 12/IP65		Component
	Motor Voltage ⑤	1-Phase	3-Phase			Catalog Number ③	Price U.S. $	Catalog Number ③	Price U.S. $	Catalog Number ③	Price U.S. $	Catalog Number ③
Frame B												
7	—	—	—	—	30A	ECX19B1AAA-_		ECX19B4AAA-_		ECX19B8AAA-_		XTAE007B10A_
	115	1/4	—	120		ECX19B1AAC-_		ECX19B4AAC-_		ECX19B8AAC-_		XTAE007B10A_
	208	3/4	1-1/2	208		ECX19B1EAC-_		ECX19B4EAC-_		ECX19B8EAC-_		XTAE007B10E_
	230	1	2	240		ECX19B1BAC-_		ECX19B4BAC-_		ECX19B8BAC-_		XTAE007B10B_
	380	—	3	380/50 Hz		ECX19B1LAC-_		ECX19B4LAC-_		ECX19B8LAC-_		XTAE007B10L_
	460	—	3	480		ECX19B1CAC-_		ECX19B4CAC-_		ECX19B8CAC-_		XTAE007B10C_
	575	—	5	600		ECX19B1DAC-_		ECX19B4DAC-_		ECX19B8DAC-_		XTAE007B10D_
Frame C												
9	—	—	—	—	30A	ECX19C1AAA-_		ECX19C4AAA-_		ECX19C8AAA-_		XTAE009B10A_
	115	1/2	—	120		ECX19C1AAC-_		ECX19C4AAC-_		ECX19C8AAC-_		XTAE009B10A_
	208	1	2	208		ECX19C1EAC-_		ECX19C4EAC-_		ECX19C8EAC-_		XTAE009B10E_
	230	1-1/2	3	240		ECX19C1BAC-_		ECX19C4BAC-_		ECX19C8BAC-_		XTAE009B10B_
	380	—	5	380/50 Hz		ECX19C1LAC-_		ECX19C4LAC-_		ECX19C8LAC-_		XTAE009B10L_
	460	—	5	480		ECX19C1CAC-_		ECX19C4CAC-_		ECX19C8CAC-_		XTAE009B10C_
	575	—	7-1/2	600		ECX19C1DAC-_		ECX19C4DAC-_		ECX19C8DAC-_		XTAE009B10D_
Frame D												
12	—	—	—	—	30A	ECX19D1AAA-_		ECX19D4AAA-_		ECX19D8AAA-_		XTAE012B10A_
	115	1/2	—	120		ECX19D1AAC-_		ECX19D4AAC-_		ECX19D8AAC-_		XTAE012B10A_
	208	1-1/2	3	208		ECX19D1EAC-_		ECX19D4EAC-_		ECX19D8EAC-_		XTAE012B10E_
	230	2	3	240		ECX19D1BAC-_		ECX19D4BAC-_		ECX19D8BAC-_		XTAE012B10B_
	380	—	5	380/50 Hz		ECX19D1LAC-_		ECX19D4LAC-_		ECX19D8LAC-_		XTAE012B10L_
	460	—	7-1/2	480		ECX19D1CAC-_		ECX19D4CAC-_		ECX19D8CAC-_		XTAE012B10C_
	575	—	10	600		ECX19D1DAC-_		ECX19D4DAC-_		ECX19D8DAC-_		XTAE012B10D_
Frame E												
15	—	—	—	—	30A	ECX19E1AAA-_		ECX19E4AAA-_		ECX19E8AAA-_		XTAE015B10A_
	115	3/4	—	120		ECX19E1AAC-_		ECX19E4AAC-_		ECX19E8AAC-_		XTAE015B10A_
	208	2	3	208		ECX19E1EAC-_		ECX19E4EAC-_		ECX19E8EAC-_		XTAE015B10E_
	230	2	3	240		ECX19E1BAC-_		ECX19E4BAC-_		ECX19E8BAC-_		XTAE015B10B_
	380	—	5	380/50 Hz		ECX19E1LAC-_		ECX19E4LAC-_		ECX19E8LAC-_		XTAE015B10L_
	460	—	7-1/2	480		ECX19E1CAC-_		ECX19E4CAC-_		ECX19E8CAC-_		XTAE015B10C_
	575	—	10	600		ECX19E1DAC-_		ECX19E4DAC-_		ECX19E8DAC-_		XTAE015B10D_
Frame F												
18	—	—	—	—	30A	ECX19F1AAA-_		ECX19F4AAA-_		ECX19F8AAA-_		XTAE018C10A_
	115	2	—	120		ECX19F1AAC-_		ECX19F4AAC-_		ECX19F8AAC-_		XTAE018C10A_
	208	2	5	208		ECX19F1EAC-_		ECX19F4EAC-_		ECX19F8EAC-_		XTAE018C10E_
	230	3	5	240		ECX19F1BAC-_		ECX19F4BAC-_		ECX19F8BAC-_		XTAE018C10B_
	380	—	7-1/2	380/50 Hz		ECX19F1LAC-_		ECX19F4LAC-_		ECX19F8LAC-_		XTAE018C10L_
	460	—	10	480		ECX19F1CAC-_		ECX19F4CAC-_		ECX19F8CAC-_		XTAE018C10C_
	575	—	15	600		ECX19F1DAC-_		ECX19F4DAC-_		ECX19F8DAC-_		XTAE018C10D_
Frame G												
25	—	—	—	—	30A	ECX19G1AAA-_		ECX19G4AAA-_		ECX19G8AAA-_		XTAE025C10A_
	115	2	—	120		ECX19G1AAC-_		ECX19G4AAC-_		ECX19G8AAC-_		XTAE025C10A_
	208	3	7-1/2	208		ECX19G1EAC-_		ECX19G4EAC-_		ECX19G8EAC-_		XTAE025C10E_
	230	5	7-1/2	240		ECX19G1BAC-_		ECX19G4BAC-_		ECX19G8BAC-_		XTAE025C10B_
	380	—	10	380/50 Hz		ECX19G1LAC-_		ECX19G4LAC-_		ECX19G8LAC-_		XTAE025C10L_
	460	—	15	480		ECX19G1CAC-_		ECX19G4CAC-_		ECX19G8CAC-_		XTAE025C10C_
	575	—	10	600		ECX19G1DAC-_		ECX19G4DAC-_		ECX19G8DAC-_		XTAE025C10D_
Frame H												
32	—	—	—	—	60A	ECX19H1AAA-_		ECX19H4AAA-_		ECX19H8AAA-_		XTAE032C10A_
	115	3	—	120		ECX19H1AAE-_		ECX19H4AAE-_		ECX19H8AAE-_		XTAE032C10A_
	208	5	10	208		ECX19H1EAE-_		ECX19H4EAE-_		ECX19H8EAE-_		XTAE032C10E_
	230	5	10	240		ECX19H1BAE-_		ECX19H4BAE-_		ECX19H8BAE-_		XTAE032C10B_
	380	—	15	380/50 Hz		ECX19H1LAE-_		ECX19H4LAE-_		ECX19H8LAE-_		XTAE032C10L_
	460	—	20	480		ECX19H1CAE-_		ECX19H4CAE-_		ECX19H8CAE-_		XTAE032C10C_
	575	—	25	600		ECX19H1DAE-_		ECX19H4DAE-_		ECX19H8DAE-_		XTAE032C10D_

① 1 hp = 0.746 kW.

② Voltage is listed @ 60 Hz unless otherwise noted. Other voltages available upon request.

③ Select proper "XTOB" Overload Amperage range as per motor FLA, see **Table 34-200**.

④ These are the Catalog Numbers for Type 4X 304-Grade Stainless Steel, as indicated by the seventh digit **4**. Example: ECX19B**4**AAA-_. To order Type 4X 316-Grade Stainless Steel, change that digit to **9**. To order Type 4 Painted Steel, change that digit to **3**. To order Nonmetallic, change that digit to **5**. For details on these Alternate Enclosures, see **PG03300001E**.

⑤ Contact factory for other voltage options.

Cover Control ..... **Page 34-176**
Wiring Diagrams ..... **Page 34-192**
Dimensions **PG03300001E**
Accessories **PG03300001E**
Modification Codes **PG03300001E**
Technical Data **PG03300001E**
Discount Symbol **1CD1C**

Table 34-207. Class ECX19 — Combination Non-reversing Starter — Fusible/Non-fusible Disconnect (Continued)

Amps	Maximum hp ①			Coil Voltage @ 60 Hz ②	Fuse Clips	Type 1/IP23		Type 4X/IP66 ④		Type 12/IP65		Component
	Motor Voltage ⑤	1-Phase	3-Phase			Catalog Number ③	Price U.S. $	Catalog Number ③	Price U.S. $	Catalog Number ③	Price U.S. $	Catalog Number ③
Frame J												
40	—	—	—	—	60A	**ECX19J1AAA-_**		**ECX19J4AAA-_**		**ECX19J8AAA-_**		**XTAE040D00A_**
	115	3	—	120		**ECX19J1AAE-_**		**ECX19J4AAE-_**		**ECX19J8AAE-_**		**XTAE040D00A_**
	208	5	10	208		**ECX19J1EAE-_**		**ECX19J4EAE-_**		**ECX19J8EAE-_**		**XTAE040D00E_**
	230	7-1/2	15	240		**ECX19J1BAE-_**		**ECX19J4BAE-_**		**ECX19J8BAE-_**		**XTAE040D00B_**
	380	—	15	380/50 Hz		**ECX19J1LAE-_**		**ECX19J4LAE-_**		**ECX19J8LAE-_**		**XTAE040D00L_**
	460	—	30	480		**ECX19J1CAE-_**		**ECX19J4CAE-_**		**ECX19J8CAE-_**		**XTAE040D00C_**
	575	—	40	600		**ECX19J1DAE-_**		**ECX19J4DAE-_**		**ECX19J8DAE-_**		**XTAE040D00D_**
Frame K												
50	—	—	—	—	100A	**ECX19K1AAA-_**		**ECX19K4AAA-_**		**ECX19K8AAA-_**		**XTAE050D00A_**
	115	3	—	120		**ECX19K1AAG-_**		**ECX19K4AAG-_**		**ECX19K8AAG-_**		**XTAE050D00A_**
	208	7-1/2	15	208		**ECX19K1EAG-_**		**ECX19K4EAG-_**		**ECX19K8EAG-_**		**XTAE050D00E_**
	230	10	20	240		**ECX19K1BAG-_**		**ECX19K4BAG-_**		**ECX19K8BAG-_**		**XTAE050D00B_**
	380	—	20	380/50 Hz		**ECX19K1LAG-_**		**ECX19K4LAG-_**		**ECX19K8LAG-_**		**XTAE050D00L_**
	460	—	40	480		**ECX19K1CAG-_**		**ECX19K4CAG-_**		**ECX19K8CAG-_**		**XTAE050D00C_**
	575	—	50	600		**ECX19K1DAG-_**		**ECX19K4DAG-_**		**ECX19K8DAG-_**		**XTAE050D00D_**
Frame L												
65	—	—	—	—	100A	**ECX19L1AAA-_**		**ECX19L4AAA-_**		**ECX19L8AAA-_**		**XTAE065D00A_**
	115	5	—	120		**ECX19L1AAG-_**		**ECX19L4AAG-_**		**ECX19L8AAG-_**		**XTAE065D00A_**
	208	10	20	208		**ECX19L1EAG-_**		**ECX19L4EAG-_**		**ECX19L8EAG-_**		**XTAE065D00E_**
	230	15	25	240		**ECX19L1BAG-_**		**ECX19L4BAG-_**		**ECX19L8BAG-_**		**XTAE065D00B_**
	380	—	30	380/50 Hz		**ECX19L1LAG-_**		**ECX19L4LAG-_**		**ECX19L8LAG-_**		**XTAE065D00L_**
	460	—	50	480		**ECX19L1CAG-_**		**ECX19L4CAG-_**		**ECX19L8CAG-_**		**XTAE065D00C_**
	575	—	60	600		**ECX19L1DAG-_**		**ECX19L4DAG-_**		**ECX19L8DAG-_**		**XTAE065D00D_**
Frame M												
80	—	—	—	—	100A	**ECX19M1AAA-_**		**ECX19M4AAA-_**		**ECX19M8AAA-_**		**XTAE080F00A_**
	115	7-1/2	—	120		**ECX19M1AAG-_**		**ECX19M4AAG-_**		**ECX19M8AAG-_**		**XTAE080F00A_**
	208	15	25	208		**ECX19M1EAG-_**		**ECX19M4EAG-_**		**ECX19M8EAG-_**		**XTAE080F00E_**
	230	15	30	240		**ECX19M1BAG-_**		**ECX19M4BAG-_**		**ECX19M8BAG-_**		**XTAE080F00B_**
	380	—	50	380/50 Hz		**ECX19M1LAG-_**		**ECX19M4LAG-_**		**ECX19M8LAG-_**		**XTAE080F00L_**
	460	—	60	480		**ECX19M1CAG-_**		**ECX19M4CAG-_**		**ECX19M8CAG-_**		**XTAE080F00C_**
	575	—	75	600		**ECX19M1DAG-_**		**ECX19M4DAG-_**		**ECX19M8DAG-_**		**XTAE080F00D_**
Frame N ⑥												
95	—	—	—	—	⑥	**ECX19N1AAA-_**		**ECX19N4AAA-_**		**ECX19N8AAA-_**		**XTAE095F00A_**
	115	7-1/2	—	120		**ECX19N1AAH-_**		**ECX19N4AAH-_**		**ECX19N8AAH-_**		**XTAE095F00A_**
	208	15	25	208		**ECX19N1EAH-_**		**ECX19N4EAH-_**		**ECX19N8EAH-_**		**XTAE095F00E_**
	230	15	40	240		**ECX19N1BAH-_**		**ECX19N4BAH-_**		**ECX19N8BAH-_**		**XTAE095F00B_**
	380	—	60	380/50 Hz		**ECX19N1LAH-_**		**ECX19N4LAH-_**		**ECX19N8LAH-_**		**XTAE095F00L_**
	460	—	75	480		**ECX19N1CAH-_**		**ECX19N4CAH-_**		**ECX19N8CAH-_**		**XTAE095F00C_**
	575	—	100	600		**ECX19N1DAH-_**		**ECX19N4DAH-_**		**ECX19N8DAH-_**		**XTAE095F00D_**
Frame P ⑥												
105	—	—	—	—	⑥	**ECX19P1AAA-_**		**ECX19P4AAA-_**		**ECX19P8AAA-_**		**XTAE115G00A_**
	115	10	—	120		**ECX19P1AAH-_**		**ECX19P4AAH-_**		**ECX19P8AAH-_**		**XTAE115G00A_**
	208	25	30	208		**ECX19P1EAH-_**		**ECX19P4EAH-_**		**ECX19P8EAH-_**		**XTAE115G00E_**
	230	25	40	240		**ECX19P1BAH-_**		**ECX19P4BAH-_**		**ECX19P8BAH-_**		**XTAE115G00B_**
	380	—	60	380/50 Hz		**ECX19P1LAH-_**		**ECX19P4LAH-_**		**ECX19P8LAH-_**		**XTAE115G00L_**
	460	—	75	480		**ECX19P1CAH-_**		**ECX19P4CAH-_**		**ECX19P8CAH-_**		**XTAE115G00C_**
	575	—	100	600		**ECX19P1DAH-_**		**ECX19P4DAH-_**		**ECX19P8DAH-_**		**XTAE115G00D_**

① 1 hp = 0.746 kW.
② Voltage is listed @ 60 Hz unless otherwise noted. Other voltages available upon request.
③ Select proper "XTOB" Overload Amperage range as per motor FLA, see **Table 34-200**.
④ These are the Catalog Numbers for Type 4X 304-Grade Stainless Steel, as indicated by the seventh digit **4**. Example: ECX19B**4**AAA-_. To order Type 4X 316-Grade Stainless Steel, change that digit to **9**. To order Type 4 Painted Steel, change that digit to **3**. To order Nonmetallic, change that digit to **5**. For details on these Alternate Enclosures, see **PG03300001E**.
⑤ Contact factory for other voltage options.
⑥ Non-fused Disconnect only.

Cover Control ..... **Page 34-176**
Wiring Diagrams ..... **Page 34-192**
Dimensions **PG03300001E**
Accessories **PG03300001E**
Modification Codes **PG03300001E**
Technical Data **PG03300001E**
Discount Symbol **1CD1C**

34

Table 34-208. Class ECX20 — Combination Reversing Starter — Fusible/Non-fusible Disconnect

Amps	Maximum hp ①			Coil Voltage @ 60 Hz ②	Fuse Clips	Type 1/IP23		Type 4X/IP66 ④		Type 12/IP65		Component
	Motor Voltage ⑤	1-Phase	3-Phase			Catalog Number ③	Price U.S. $	Catalog Number ③	Price U.S. $	Catalog Number ③	Price U.S. $	Catalog Number ③
Frame B												
7	—	—	—	—	30A	ECX20B1AAA-_		ECX20B4AAA-_		ECX20B8AAA-_		XTAR007B10A_
	115	1/4	—	120		ECX20B1AAC-_		ECX20B4AAC-_		ECX20B8AAC-_		XTAR007B10A_
	208	3/4	1-1/2	208		ECX20B1EAC-_		ECX20B4EAC-_		ECX20B8EAC-_		XTAR007B10E_
	230	1	2	240		ECX20B1BAC-_		ECX20B4BAC-_		ECX20B8BAC-_		XTAR007B10B_
	380	—	3	380/50 Hz		ECX20B1LAC-_		ECX20B4LAC-_		ECX20B8LAC-_		XTAR007B10L_
	460	—	3	480		ECX20B1CAC-_		ECX20B4CAC-_		ECX20B8CAC-_		XTAR007B10C_
	575	—	5	600		ECX20B1DAC-_		ECX20B4DAC-_		ECX20B8DAC-_		XTAR007B10D_
Frame C												
9	—	—	—	—	30A	ECX20C1AAA-_		ECX20C4AAA-_		ECX20C8AAA-_		XTAR009B10A_
	115	1/2	—	120		ECX20C1AAC-_		ECX20C4AAC-_		ECX20C8AAC-_		XTAR009B10A_
	208	1	2	208		ECX20C1EAC-_		ECX20C4EAC-_		ECX20C8EAC-_		XTAR009B10E_
	230	1-1/2	3	240		ECX20C1BAC-_		ECX20C4BAC-_		ECX20C8BAC-_		XTAR009B10B_
	380	—	5	380/50 Hz		ECX20C1LAC-_		ECX20C4LAC-_		ECX20C8LAC-_		XTAR009B10L_
	460	—	5	480		ECX20C1CAC-_		ECX20C4CAC-_		ECX20C8CAC-_		XTAR009B10C_
	575	—	7-1/2	600		ECX20C1DAC-_		ECX20C4DAC-_		ECX20C8DAC-_		XTAR009B10D_
Frame D												
12	—	—	—	—	30A	ECX20D1AAA-_		ECX20D4AAA-_		ECX20D8AAA-_		XTAR012B10A_
	115	1/2	—	120		ECX20D1AAC-_		ECX20D4AAC-_		ECX20D8AAC-_		XTAR012B10A_
	208	1-1/2	3	208		ECX20D1EAC-_		ECX20D4EAC-_		ECX20D8EAC-_		XTAR012B10E_
	230	2	3	240		ECX20D1BAC-_		ECX20D4BAC-_		ECX20D8BAC-_		XTAR012B10B_
	380	—	5	380/50 Hz		ECX20D1LAC-_		ECX20D4LAC-_		ECX20D8LAC-_		XTAR012B10L_
	460	—	7-1/2	480		ECX20D1CAC-_		ECX20D4CAC-_		ECX20D8CAC-_		XTAR012B10C_
	575	—	10	600		ECX20D1DAC-_		ECX20D4DAC-_		ECX20D8DAC-_		XTAR012B10D_
Frame E												
15	—	—	—	—	30A	ECX20E1AAA-_		ECX20E4AAA-_		ECX20E8AAA-_		XTAR015B10A_
	115	3/4	—	120		ECX20E1AAC-_		ECX20E4AAC-_		ECX20E8AAC-_		XTAR015B10A_
	208	2	3	208		ECX20E1EAC-_		ECX20E4EAC-_		ECX20E8EAC-_		XTAR015B10E_
	230	2	3	240		ECX20E1BAC-_		ECX20E4BAC-_		ECX20E8BAC-_		XTAR015B10B_
	380	—	5	380/50 Hz		ECX20E1LAC-_		ECX20E4LAC-_		ECX20E8LAC-_		XTAR015B10L_
	460	—	7-1/2	480		ECX20E1CAC-_		ECX20E4CAC-_		ECX20E8CAC-_		XTAR015B10C_
	575	—	10	600		ECX20E1DAC-_		ECX20E4DAC-_		ECX20E8DAC-_		XTAR015B10D_
Frame F												
18	—	—	—	—	30A	ECX20F1AAA-_		ECX20F4AAA-_		ECX20F8AAA-_		XTAR018C10A_
	115	2	—	120		ECX20F1AAC-_		ECX20F4AAC-_		ECX20F8AAC-_		XTAR018C10A_
	208	2	5	208		ECX20F1EAC-_		ECX20F4EAC-_		ECX20F8EAC-_		XTAR018C10E_
	230	3	5	240		ECX20F1BAC-_		ECX20F4BAC-_		ECX20F8BAC-_		XTAR018C10B_
	380	—	7-1/2	380/50 Hz		ECX20F1LAC-_		ECX20F4LAC-_		ECX20F8LAC-_		XTAR018C10L_
	460	—	10	480		ECX20F1CAC-_		ECX20F4CAC-_		ECX20F8CAC-_		XTAR018C10C_
	575	—	15	600		ECX20F1DAC-_		ECX20F4DAC-_		ECX20F8DAC-_		XTAR018C10D_
Frame G												
25	—	—	—	—	30A	ECX20G1AAA-_		ECX20G4AAA-_		ECX20G8AAA-_		XTAR025C10A_
	115	2	—	120		ECX20G1AAC-_		ECX20G4AAC-_		ECX20G8AAC-_		XTAR025C10A_
	208	3	7-1/2	208		ECX20G1EAC-_		ECX20G4EAC-_		ECX20G8EAC-_		XTAR025C10E_
	230	5	7-1/2	240		ECX20G1BAC-_		ECX20G4BAC-_		ECX20G8BAC-_		XTAR025C10B_
	380	—	10	380/50 Hz		ECX20G1LAC-_		ECX20G4LAC-_		ECX20G8LAC-_		XTAR025C10L_
	460	—	15	480		ECX20G1CAC-_		ECX20G4CAC-_		ECX20G8CAC-_		XTAR025C10C_
	575	—	10	600		ECX20G1DAC-_		ECX20G4DAC-_		ECX20G8DAC-_		XTAR025C10D_
Frame H												
32	—	—	—	—	60A	ECX20H1AAA-_		ECX20H4AAA-_		ECX20H8AAA-_		XTAR032C10A_
	115	3	—	120		ECX20H1AAE-_		ECX20H4AAE-_		ECX20H8AAE-_		XTAR032C10A_
	208	5	10	208		ECX20H1EAE-_		ECX20H4EAE-_		ECX20H8EAE-_		XTAR032C10E_
	230	5	10	240		ECX20H1BAE-_		ECX20H4BAE-_		ECX20H8BAE-_		XTAR032C10B_
	380	—	15	380/50 Hz		ECX20H1LAE-_		ECX20H4LAE-_		ECX20H8LAE-_		XTAR032C10L_
	460	—	20	480		ECX20H1CAE-_		ECX20H4CAE-_		ECX20H8CAE-_		XTAR032C10C_
	575	—	25	600		ECX20H1DAE-_		ECX20H4DAE-_		ECX20H8DAE-_		XTAR032C10D_

① 1 hp = 0.746 kW.
② Voltage is listed @ 60 Hz unless otherwise noted. Other voltages available upon request.
③ Select proper "XTOB" Overload Amperage range as per motor FLA, see **Table 34-200**.
④ These are the Catalog Numbers for Type 4X 304-Grade Stainless Steel, as indicated by the seventh digit **4**. Example: ECX20B**4**AAA-_. To order Type 4X 316-Grade Stainless Steel, change that digit to **9**. To order Type 4 Painted Steel, change that digit to **3**. To order Nonmetallic, change that digit to **5**. For details on these Alternate Enclosures, see **PG03300001E**.
⑤ Contact factory for other voltage options.

Cover Control ..... **Page 34-176**
Wiring Diagrams ..... **Page 34-192**
Dimensions **PG03300001E**
Accessories **PG03300001E**
Modification Codes **PG03300001E**
Technical Data **PG03300001E**
Discount Symbol **1CD1C**

Table 34-208. Class ECX20 — Combination Reversing Starter — Fusible/Non-fusible Disconnect (Continued)

Amps	Maximum hp ①			Coil Voltage @ 60 Hz ②	Fuse Clips	Type 1/IP23		Type 4X/IP66 ④		Type 12/IP65		Component
	Motor Voltage ⑤	1-Phase	3-Phase			Catalog Number ③	Price U.S. $	Catalog Number ③	Price U.S. $	Catalog Number ③	Price U.S. $	Catalog Number ③
Frame J												
40	—	—	—	—	60A	**ECX20J1AAA-_**		**ECX20J4AAA-_**		**ECX20J8AAA-_**		**XTAR040D00A_**
	115	3	—	120		**ECX20J1AAE-_**		**ECX20J4AAE-_**		**ECX20J8AAE-_**		**XTAR040D00A_**
	208	5	10	208		**ECX20J1EAE-_**		**ECX20J4EAE-_**		**ECX20J8EAE-_**		**XTAR040D00E_**
	230	7-1/2	15	240		**ECX20J1BAE-_**		**ECX20J4BAE-_**		**ECX20J8BAE-_**		**XTAR040D00B_**
	380	—	15	380/50 Hz		**ECX20J1LAE-_**		**ECX20J4LAE-_**		**ECX20J8LAE-_**		**XTAR040D00L_**
	460	—	30	480		**ECX20J1CAE-_**		**ECX20J4CAE-_**		**ECX20J8CAE-_**		**XTAR040D00C_**
	575	—	40	600		**ECX20J1DAE-_**		**ECX20J4DAE-_**		**ECX20J8DAE-_**		**XTAR040D00D_**
Frame K												
50	—	—	—	—	100A	**ECX20K1AAA-_**		**ECX20K4AAA-_**		**ECX20K8AAA-_**		**XTAR050D00A_**
	115	3	—	120		**ECX20K1AAG-_**		**ECX20K4AAG-_**		**ECX20K8AAG-_**		**XTAR050D00A_**
	208	7-1/2	15	208		**ECX20K1EAG-_**		**ECX20K4EAG-_**		**ECX20K8EAG-_**		**XTAR050D00E_**
	230	10	20	240		**ECX20K1BAG-_**		**ECX20K4BAG-_**		**ECX20K8BAG-_**		**XTAR050D00B_**
	380	—	20	380/50 Hz		**ECX20K1LAG-_**		**ECX20K4LAG-_**		**ECX20K8LAG-_**		**XTAR050D00L_**
	460	—	40	480		**ECX20K1CAG-_**		**ECX20K4CAG-_**		**ECX20K8CAG-_**		**XTAR050D00C_**
	575	—	50	600		**ECX20K1DAG-_**		**ECX20K4DAG-_**		**ECX20K8DAG-_**		**XTAR050D00D_**
Frame L												
65	—	—	—	—	100A	**ECX20L1AAA-_**		**ECX20L4AAA-_**		**ECX20L8AAA-_**		**XTAR065D00A_**
	115	5	—	120		**ECX20L1AAG-_**		**ECX20L4AAG-_**		**ECX20L8AAG-_**		**XTAR065D00A_**
	208	10	20	208		**ECX20L1EAG-_**		**ECX20L4EAG-_**		**ECX20L8EAG-_**		**XTAR065D00E_**
	230	15	25	240		**ECX20L1BAG-_**		**ECX20L4BAG-_**		**ECX20L8BAG-_**		**XTAR065D00B_**
	380	—	30	380/50 Hz		**ECX20L1LAG-_**		**ECX20L4LAG-_**		**ECX20L8LAG-_**		**XTAR065D00L_**
	460	—	50	480		**ECX20L1CAG-_**		**ECX20L4CAG-_**		**ECX20L8CAG-_**		**XTAR065D00C_**
	575	—	60	600		**ECX20L1DAG-_**		**ECX20L4DAG-_**		**ECX20L8DAG-_**		**XTAR065D00D_**
Frame M												
80	—	—	—	—	100A	**ECX20M1AAA-_**		**ECX20M4AAA-_**		**ECX20M8AAA-_**		**XTAR080F00A_**
	115	7-1/2	—	120		**ECX20M1AAG-_**		**ECX20M4AAG-_**		**ECX20M8AAG-_**		**XTAR080F00A_**
	208	15	25	208		**ECX20M1EAG-_**		**ECX20M4EAG-_**		**ECX20M8EAG-_**		**XTAR080F00E_**
	230	15	30	240		**ECX20M1BAG-_**		**ECX20M4BAG-_**		**ECX20M8BAG-_**		**XTAR080F00B_**
	380	—	50	380/50 Hz		**ECX20M1LAG-_**		**ECX20M4LAG-_**		**ECX20M8LAG-_**		**XTAR080F00L_**
	460	—	60	480		**ECX20M1CAG-_**		**ECX20M4CAG-_**		**ECX20M8CAG-_**		**XTAR080F00C_**
	575	—	75	600		**ECX20M1DAG-_**		**ECX20M4DAG-_**		**ECX20M8DAG-_**		**XTAR080F00D_**
Frame N ⑥												
95	—	—	—	—	⑥	**ECX20N1AAA-_**		**ECX20N4AAA-_**		**ECX20N8AAA-_**		**XTAR095F00A_**
	115	7-1/2	—	120		**ECX20N1AAH-_**		**ECX20N4AAH-_**		**ECX20N8AAH-_**		**XTAR095F00A_**
	208	15	25	208		**ECX20N1EAH-_**		**ECX20N4EAH-_**		**ECX20N8EAH-_**		**XTAR095F00E_**
	230	15	40	240		**ECX20N1BAH-_**		**ECX20N4BAH-_**		**ECX20N8BAH-_**		**XTAR095F00B_**
	380	—	60	380/50 Hz		**ECX20N1LAH-_**		**ECX20N4LAH-_**		**ECX20N8LAH-_**		**XTAR095F00L_**
	460	—	75	480		**ECX20N1CAH-_**		**ECX20N4CAH-_**		**ECX20N8CAH-_**		**XTAR095F00C_**
	575	—	100	600		**ECX20N1DAH-_**		**ECX20N4DAH-_**		**ECX20N8DAH-_**		**XTAR095F00D_**
Frame P ⑥												
105	—	—	—	—	⑥	**ECX20P1AAA-_**		**ECX20P4AAA-_**		**ECX20P8AAA-_**		**XTAR115G00A_**
	115	10	—	120		**ECX20P1AAH-_**		**ECX20P4AAH-_**		**ECX20P8AAH-_**		**XTAR115G00A_**
	208	25	30	208		**ECX20P1EAH-_**		**ECX20P4EAH-_**		**ECX20P8EAH-_**		**XTAR115G00E_**
	230	25	40	240		**ECX20P1BAH-_**		**ECX20P4BAH-_**		**ECX20P8BAH-_**		**XTAR115G00B_**
	380	—	60	380/50 Hz		**ECX20P1LAH-_**		**ECX20P4LAH-_**		**ECX20P8LAH-_**		**XTAR115G00L_**
	460	—	75	480		**ECX20P1CAH-_**		**ECX20P4CAH-_**		**ECX20P8CAH-_**		**XTAR115G00C_**
	575	—	100	600		**ECX20P1DAH-_**		**ECX20P4DAH-**		**ECX20P8DAH-_**		**XTAR115G00D_**

① 1 hp = 0.746 kW.
② Voltage is listed @ 60 Hz unless otherwise noted. Other voltages available upon request.
③ Select proper "XTOB" Overload Amperage range as per motor FLA, see **Table 34-200**.
④ These are the Catalog Numbers for Type 4X 304-Grade Stainless Steel, as indicated by the seventh digit **4**. Example: ECX20B**4**AAA-_. To order Type 4X 316-Grade Stainless Steel, change that digit to **9**. To order Type 4 Painted Steel, change that digit to **3**. To order Nonmetallic, change that digit to **5**. For details on these Alternate Enclosures, see **PG03300001E**.
⑤ Contact factory for other voltage options.
⑥ Non-fused Disconnect only.

Cover Control ..... **Page 34-176**
Wiring Diagrams ..... **Page 34-192**
Dimensions **PG03300001E**
Accessories **PG03300001E**
Modification Codes **PG03300001E**
Technical Data **PG03300001E**
Discount Symbol **1CD1C**

34

Table 34-209. Class ECX25 — Combination Non-reversing Starter — Circuit Breaker

Amps	Maximum hp ①			Coil Voltage @ 60 Hz ②	HMCP	Type 1/IP23		Type 4X/IP66 ④		Type 12/IP65		Component
	Motor Voltage ⑤	1-Phase	3-Phase			Catalog Number ③	Price U.S. $	Catalog Number ③	Price U.S. $	Catalog Number ③	Price U.S. $	Catalog Number ③
Frame B												
7	115	1/4	—	120	7A	ECX25B1AAC-_		ECX25B4AAC-_		ECX25B8AAC-_		XTAE007B10A_
	208	3/4	1-1/2	208		ECX25B1EAC-_		ECX25B4EAC-_		ECX25B8EAC-_		XTAE007B10E_
	230	1	2	240		ECX25B1BAC-_		ECX25B4BAC-_		ECX25B8BAC-_		XTAE007B10B_
	380	—	3	380/50 Hz		ECX25B1LAC-_		ECX25B4LAC-_		ECX25B8LAC-_		XTAE007B10L_
	460	—	3	480		ECX25B1CAC-_		ECX25B4CAC-_		ECX25B8CAC-_		XTAE007B10C_
	575	—	5	600		ECX25B1DAC-_		ECX25B4DAC-_		ECX25B8DAC-_		XTAE007B10D_
Frame C												
9	115	1/2	—	120	15A	ECX25C1AAD-_		ECX25C4AAD-_		ECX25C8AAD-_		XTAE009B10A_
	208	1	2	208		ECX25C1EAD-_		ECX25C4EAD-_		ECX25C8EAD-_		XTAE009B10E_
	230	1-1/2	3	240		ECX25C1BAD-_		ECX25C4BAD-_		ECX25C8BAD-_		XTAE009B10B_
	380	—	5	380/50 Hz		ECX25C1LAD-_		ECX25C4LAD-_		ECX25C8LAD-_		XTAE009B10L_
	460	—	5	480		ECX25C1CAD-_		ECX25C4CAD-_		ECX25C8CAD-_		XTAE009B10C_
	575	—	7-1/2	600		ECX25C1DAD-_		ECX25C4DAD-_		ECX25C8DAD-_		XTAE009B10D_
Frame D												
12	115	1/2	—	120	15A	ECX25D1AAD-_		ECX25D4AAD-_		ECX25D8AAD-_		XTAE012B10A_
	208	1-1/2	3	208		ECX25D1EAD-_		ECX25D4EAD-_		ECX25D8EAD-_		XTAE012B10E_
	230	2	3	240		ECX25D1BAD-_		ECX25D4BAD-_		ECX25D8BAD-_		XTAE012B10B_
	380	—	5	380/50 Hz		ECX25D1LAD-_		ECX25D4LAD-_		ECX25D8LAD-_		XTAE012B10L_
	460	—	7-1/2	480		ECX25D1CAD-_		ECX25D4CAD-_		ECX25D8CAD-_		XTAE012B10C_
	575	—	10	600		ECX25D1DAD-_		ECX25D4DAD-_		ECX25D8DAD-_		XTAE012B10D_
Frame E												
15	115	3/4	—	120	30A	ECX25E1AAE-_		ECX25E4AAE-_		ECX25E8AAE-_		XTAE015B10A_
	208	2	3	208		ECX25E1EAE-_		ECX25E4EAE-_		ECX25E8EAE-_		XTAE015B10E_
	230	2	3	240		ECX25E1BAE-_		ECX25E4BAE-_		ECX25E8BAE-_		XTAE015B10B_
	380	—	5	380/50 Hz		ECX25E1LAE-_		ECX25E4LAE-_		ECX25E8LAE-_		XTAE015B10L_
	460	—	7-1/2	480		ECX25E1CAE-_		ECX25E4CAE-_		ECX25E8CAE-_		XTAE015B10C_
	575	—	10	600		ECX25E1DAE-_		ECX25E4DAE-_		ECX25E8DAE-_		XTAE015B10D_
Frame F												
18	115	2	—	120	30A	ECX25F1AAE-_		ECX25F4AAE-_		ECX25F8AAE-_		XTAE018C10A_
	208	2	5	208		ECX25F1EAE-_		ECX25F4EAE-_		ECX25F8EAE-_		XTAE018C10E_
	230	3	5	240		ECX25F1BAE-_		ECX25F4BAE-_		ECX25F8BAE-_		XTAE018C10B_
	380	—	7-1/2	380/50 Hz		ECX25F1LAE-_		ECX25F4LAE-_		ECX25F8LAE-_		XTAE018C10L_
	460	—	10	480		ECX25F1CAE-_		ECX25F4CAE-_		ECX25F8CAE-_		XTAE018C10C_
	575	—	15	600		ECX25F1DAE-_		ECX25F4DAE-_		ECX25F8DAE-_		XTAE018C10D_
Frame G												
25	115	2	—	120	50A	ECX25G1AAF-_		ECX25G4AAF-_		ECX25G8AAF-_		XTAE025C10A_
	208	3	7-1/2	208		ECX25G1EAF-_		ECX25G4EAF-_		ECX25G8EAF-_		XTAE025C10E_
	230	5	7-1/2	240		ECX25G1BAF-_		ECX25G4BAF-_		ECX25G8BAF-_		XTAE025C10B_
	380	—	10	380/50 Hz		ECX25G1LAF-_		ECX25G4LAF-_		ECX25G8LAF-_		XTAE025C10L_
	460	—	15	480		ECX25G1CAF-_		ECX25G4CAF-_		ECX25G8CAF-_		XTAE025C10C_
	575	—	10	600		ECX25G1DAF-_		ECX25G4DAF-_		ECX25G8DAF-_		XTAE025C10D_
Frame H												
32	115	3	—	120	50A	ECX25H1AAF-_		ECX25H4AAF-_		ECX25H8AAF-_		XTAE032C10A_
	208	5	10	208		ECX25H1EAF-_		ECX25H4EAF-_		ECX25H8EAF-_		XTAE032C10E_
	230	5	10	240		ECX25H1BAF-_		ECX25H4BAF-_		ECX25H8BAF-_		XTAE032C10B_
	380	—	15	380/50 Hz		ECX25H1LAF-_		ECX25H4LAF-_		ECX25H8LAF-_		XTAE032C10L_
	460	—	20	480		ECX25H1CAF-_		ECX25H4CAF-_		ECX25H8CAF-_		XTAE032C10C_
	575	—	25	600		ECX25H1DAF-_		ECX25H4DAF-_		ECX25H8DAF-_		XTAE032C10D_

① 1 hp = 0.746 kW.

② Voltage is listed @ 60 Hz unless otherwise noted. Other voltages available upon request.

③ Select proper "XTOB" Overload Amperage range as per motor FLA, see **Table 34-200**.

④ These are the Catalog Numbers for Type 4X 304-Grade Stainless Steel, as indicated by the seventh digit **4**. Example: ECX25B**4**AAA-_. To order Type 4X 316-Grade Stainless Steel, change that digit to **9**. To order Type 4 Painted Steel, change that digit to **3**. To order Nonmetallic, change that digit to **5**. For details on these Alternate Enclosures, see **PG03300001E**.

⑤ Contact factory for other voltage options.

Cover Control ..... **Page 34-176**
Wiring Diagrams ..... **Page 34-192**
Dimensions **PG03300001E**
Accessories **PG03300001E**
Modification Codes **PG03300001E**
Technical Data **PG03300001E**
Discount Symbol **1CD1C**

Table 34-209. Class ECX25 — Combination Non-reversing Starter — Circuit Breaker (Continued)

Amps	Maximum hp ①			Coil Voltage @ 60 Hz ②	HMCP	Type 1/IP23		Type 4X/IP66 ④		Type 12/IP65		Component
	Motor Voltage ⑤	1-Phase	3-Phase			Catalog Number ③	Price U.S. $	Catalog Number ③	Price U.S. $	Catalog Number ③	Price U.S. $	Catalog Number ③
Frame J												
40	115	3	—	120	50A	ECX25J1AAF-_		ECX25J4AAF-_		ECX25J8AAF-_		XTAE040D00A_
	208	5	10	208		ECX25J1EAF-_		ECX25J4EAF-_		ECX25J8EAF-_		XTAE040D00E_
	230	7-1/2	15	240		ECX25J1BAF-_		ECX25J4BAF-_		ECX25J8BAF-_		XTAE040D00B_
	380	—	15	380/50 Hz		ECX25J1LAF-_		ECX25J4LAF-_		ECX25J8LAF-_		XTAE040D00L_
	460	—	30	480		ECX25J1CAF-_		ECX25J4CAF-_		ECX25J8CAF-_		XTAE040D00C_
	575	—	40	600		ECX25J1DAF-_		ECX25J4DAF-_		ECX25J8DAF-_		XTAE040D00D_
Frame K												
50	115	3	—	120	70A	ECX25K1AAW-_		ECX25K4AAW-_		ECX25K8AAW-_		XTAE050D00A_
	208	7-1/2	15	208		ECX25K1EAW-_		ECX25K4EAW-_		ECX25K8EAW-_		XTAE050D00E_
	230	10	20	240		ECX25K1BAW-_		ECX25K4BAW-_		ECX25K8BAW-_		XTAE050D00B_
	380	—	20	380/50 Hz		ECX25K1LAW-_		ECX25K4LAW-_		ECX25K8LAW-_		XTAE050D00L_
	460	—	40	480		ECX25K1CAW-_		ECX25K4CAW-_		ECX25K8CAW-_		XTAE050D00C_
	575	—	50	600		ECX25K1DAW-_		ECX25K4DAW-_		ECX25K8DAW-_		XTAE050D00D_
Frame L												
65	115	5	—	120	70A	ECX25L1AAW-_		ECX25L4AAW-_		ECX25L8AAW-_		XTAE065D00A_
	208	10	20	208		ECX25L1EAW-_		ECX25L4EAW-_		ECX25L8EAW-_		XTAE065D00E_
	230	15	25	240		ECX25L1BAW-_		ECX25L4BAW-_		ECX25L8BAW-_		XTAE065D00B_
	380	—	30	380/50 Hz		ECX25L1LAW-_		ECX25L4LAW-_		ECX25L8LAW-_		XTAE065D00L_
	460	—	50	480		ECX25L1CAW-_		ECX25L4CAW-_		ECX25L8CAW-_		XTAE065D00C_
	575	—	60	600		ECX25L1DAW-_		ECX25L4DAW-_		ECX25L8DAW-_		XTAE065D00D_
Frame M												
80	115	7-1/2	—	120	100A	ECX25M1AAG-_		ECX25M4AAG-_		ECX25M8AAG-_		XTAE080F00A_
	208	15	25	208		ECX25M1EAG-_		ECX25M4EAG-_		ECX25M8EAG-_		XTAE080F00E_
	230	15	30	240		ECX25M1BAG-_		ECX25M4BAG-_		ECX25M8BAG-_		XTAE080F00B_
	380	—	50	380/50 Hz		ECX25M1LAG-_		ECX25M4LAG-_		ECX25M8LAG-_		XTAE080F00L_
	460	—	60	480		ECX25M1CAG-_		ECX25M4CAG-_		ECX25M8CAG-_		XTAE080F00C_
	575	—	75	600		ECX25M1DAG-_		ECX25M4DAG-_		ECX25M8DAG-_		XTAE080F00D_
Frame N												
95	115	7-1/2	—	120	100A	ECX25N1AAG-_		ECX25N4AAG-_		ECX25N8AAG-_		XTAE095F00A_
	208	15	25	208		ECX25N1EAG-_		ECX25N4EAG-_		ECX25N8EAG-_		XTAE095F00E_
	230	15	40	240		ECX25N1BAG-_		ECX25N4BAG-_		ECX25N8BAG-_		XTAE095F00B_
	380	—	60	380/50 Hz		ECX25N1LAG-_		ECX25N4LAG-_		ECX25N8LAG-_		XTAE095F00L_
	460	—	75	480		ECX25N1CAG-_		ECX25N4CAG-_		ECX25N8CAG-_		XTAE095F00C_
	575	—	100	600		ECX25N1DAG-_		ECX25N4DAG-_		ECX25N8DAG-_		XTAE095F00D_
Frame P												
115	115	10	—	120	150A	ECX25P1AAH-_		ECX25P4AAH-_		ECX25P8AAH-_		XTAE115G00A_
	208	25	40	208		ECX25P1EAH-_		ECX25P4EAH-_		ECX25P8EAH-_		XTAE115G00E_
	230	25	50	240		ECX25P1BAH-_		ECX25P4BAH-_		ECX25P8BAH-_		XTAE115G00B_
	380	—	60	380/50 Hz		ECX25P1LAH-_		ECX25P4LAH-_		ECX25P8LAH-_		XTAE115G00L_
	460	—	100	480		ECX25P1CAH-_		ECX25P4CAH-_		ECX25P8CAH-_		XTAE115G00C_
	575	—	125	600		ECX25P1DAH-_		ECX25P4DAH-_		ECX25P8DAH-_		XTAE115G00D_
Frame Q												
125	115	15	—	120	150A	ECX25Q1AAH-_		ECX25Q4AAH-_		ECX25Q8AAH-_		XTAE150G00A_
	208	25	40	208		ECX25Q1EAH-_		ECX25Q4EAH-_		ECX25Q8EAH-_		XTAE150G00E_
	230	25	50	240		ECX25Q1BAH-_		ECX25Q4BAH-_		ECX25Q8BAH-_		XTAE150G00B_
	380	—	75	380/50 Hz		ECX25Q1LAH-_		ECX25Q4LAH-_		ECX25Q8LAH-_		XTAE150G00L_
	460	—	100	480		ECX25Q1CAH-_		ECX25Q4CAH-_		ECX25Q8CAH-_		XTAE150G00C_
	575	—	125	600		ECX25Q1DAH-_		ECX25Q4DAH-_		ECX25Q8DAH-_		XTAE150G00D_

① 1 hp = 0.746 kW.
② Voltage is listed @ 60 Hz unless otherwise noted. Other voltages available upon request.
③ Select proper "XTOB" Overload Amperage range as per motor FLA, see **Table 34-200**.
④ These are the Catalog Numbers for Type 4X 304-Grade Stainless Steel, as indicated by the seventh digit **4**. Example: ECX25B**4**AAA-_. To order Type 4X 316-Grade Stainless Steel, change that digit to **9**. To order Type 4 Painted Steel, change that digit to **3**. To order Nonmetallic, change that digit to **5**. For details on these Alternate Enclosures, see **PG03300001E**.
⑤ Contact factory for other voltage options.

Cover Control ..... **Page 34-176**
Wiring Diagrams ..... **Page 34-192**
Dimensions **PG03300001E**
Accessories **PG03300001E**
Modification Codes **PG03300001E**
Technical Data **PG03300001E**
Discount Symbol **1CD1C**

34

Table 34-210. Class ECX26 — Combination Reversing Starter — Circuit Breaker

Amps	Maximum hp ①			Coil Voltage @ 60 Hz ②	HMCP	Type 1/IP23		Type 4X/IP66 ④		Type 12/IP65		Component
	Motor Voltage ⑤	1-Phase	3-Phase			Catalog Number ③	Price U.S. $	Catalog Number ③	Price U.S. $	Catalog Number ③	Price U.S. $	Catalog Number ③
Frame B												
7	115	1/4	—	120	7A	ECX26B1AAC-_		ECX26B4AAC-_		ECX26B8AAC-_		XTAR007B10A_
	208	3/4	1-1/2	208		ECX26B1EAC-_		ECX26B4EAC-_		ECX26B8EAC-_		XTAR007B10E_
	230	1	2	240		ECX26B1BAC-_		ECX26B4BAC-_		ECX26B8BAC-_		XTAR007B10B_
	380	—	3	380/50 Hz		ECX26B1LAC-_		ECX26B4LAC-_		ECX26B8LAC-_		XTAR007B10L_
	460	—	3	480		ECX26B1CAC-_		ECX26B4CAC-_		ECX26B8CAC-_		XTAR007B10C_
	575	—	5	600		ECX26B1DAC-_		ECX26B4DAC-_		ECX26B8DAC-_		XTAR007B10D_
Frame C												
9	115	1/2	—	120	15A	ECX26C1AAD-_		ECX26C4AAD-_		ECX26C8AAD-_		XTAR009B10A_
	208	1	2	208		ECX26C1EAD-_		ECX26C4EAD-_		ECX26C8EAD-_		XTAR009B10E_
	230	1-1/2	3	240		ECX26C1BAD-_		ECX26C4BAD-_		ECX26C8BAD-_		XTAR009B10B_
	380	—	5	380/50 Hz		ECX26C1LAD-_		ECX26C4LAD-_		ECX26C8LAD-_		XTAR009B10L_
	460	—	5	480		ECX26C1CAD-_		ECX26C4CAD-_		ECX26C8CAD-_		XTAR009B10C_
	575	—	7-1/2	600		ECX26C1DAD-_		ECX26C4DAD-_		ECX26C8DAD-_		XTAR009B10D_
Frame D												
12	115	1/2	—	120	15A	ECX26D1AAD-_		ECX26D4AAD-_		ECX26D8AAD-_		XTAR012B10A_
	208	1-1/2	3	208		ECX26D1EAD-_		ECX26D4EAD-_		ECX26D8EAD-_		XTAR012B10E_
	230	2	3	240		ECX26D1BAD-_		ECX26D4BAD-_		ECX26D8BAD-_		XTAR012B10B_
	380	—	5	380/50 Hz		ECX26D1LAD-_		ECX26D4LAD-_		ECX26D8LAD-_		XTAR012B10L_
	460	—	7-1/2	480		ECX26D1CAD-_		ECX26D4CAD-_		ECX26D8CAD-_		XTAR012B10C_
	575	—	10	600		ECX26D1DAD-_		ECX26D4DAD-_		ECX26D8DAD-_		XTAR012B10D_
Frame E												
15	115	3/4	—	120	30A	ECX26E1AAE-_		ECX26E4AAE-_		ECX26E8AAE-_		XTAR015B10A_
	208	2	3	208		ECX26E1EAE-_		ECX26E4EAE-_		ECX26E8EAE-_		XTAR015B10E_
	230	2	3	240		ECX26E1BAE-_		ECX26E4BAE-_		ECX26E8BAE-_		XTAR015B10B_
	380	—	5	380/50 Hz		ECX26E1LAE-_		ECX26E4LAE-_		ECX26E8LAE-_		XTAR015B10L_
	460	—	7-1/2	480		ECX26E1CAE-_		ECX26E4CAE-_		ECX26E8CAE-_		XTAR015B10C_
	575	—	10	600		ECX26E1DAE-_		ECX26E4DAE-_		ECX26E8DAE-_		XTAR015B10D_
Frame F												
18	115	2	—	120	30A	ECX26F1AAE-_		ECX26F4AAE-_		ECX26F8AAE-_		XTAR018C10A_
	208	2	5	208		ECX26F1EAE-_		ECX26F4EAE-_		ECX26F8EAE-_		XTAR018C10E_
	230	3	5	240		ECX26F1BAE-_		ECX26F4BAE-_		ECX26F8BAE-_		XTAR018C10B_
	380	—	7-1/2	380/50 Hz		ECX26F1LAE-_		ECX26F4LAE-_		ECX26F8LAE-_		XTAR018C10L_
	460	—	10	480		ECX26F1CAE-_		ECX26F4CAE-_		ECX26F8CAE-_		XTAR018C10C_
	575	—	15	600		ECX26F1DAE-_		ECX26F4DAE-_		ECX26F8DAE-_		XTAR018C10D_
Frame G												
25	115	2	—	120	50A	ECX26G1AAF-_		ECX26G4AAF-_		ECX26G8AAF-_		XTAR025C10A_
	208	3	7-1/2	208		ECX26G1EAF-_		ECX26G4EAF-_		ECX26G8EAF-_		XTAR025C10E_
	230	5	7-1/2	240		ECX26G1BAF-_		ECX26G4BAF-_		ECX26G8BAF-_		XTAR025C10B_
	380	—	10	380/50 Hz		ECX26G1LAF-_		ECX26G4LAF-_		ECX26G8LAF-_		XTAR025C10L_
	460	—	15	480		ECX26G1CAF-_		ECX26G4CAF-_		ECX26G8CAF-_		XTAR025C10C_
	575	—	10	600		ECX26G1DAF-_		ECX26G4DAF-_		ECX26G8DAF-_		XTAR025C10D_
Frame H												
32	115	3	—	120	50A	ECX26H1AAF-_		ECX26H4AAF-_		ECX26H8AAF-_		XTAR032C10A_
	208	5	10	208		ECX26H1EAF-_		ECX26H4EAF-_		ECX26H8EAF-_		XTAR032C10E_
	230	5	10	240		ECX26H1BAF-_		ECX26H4BAF-_		ECX26H8BAF-_		XTAR032C10B_
	380	—	15	380/50 Hz		ECX26H1LAF-_		ECX26H4LAF-_		ECX26H8LAF-_		XTAR032C10L_
	460	—	20	480		ECX26H1CAF-_		ECX26H4CAF-_		ECX26H8CAF-_		XTAR032C10C_
	575	—	25	600		ECX26H1DAF-_		ECX26H4DAF-_		ECX26H8DAF-_		XTAR032C10D_

① 1 hp = 0.746 kW.
② Voltage is listed @ 60 Hz unless otherwise noted. Other voltages available upon request.
③ Select proper "XTOB" Overload Amperage range as per motor FLA, see **Table 34-200**.
④ These are the Catalog Numbers for Type 4X 304-Grade Stainless Steel, as indicated by the seventh digit **4**. Example: ECX26B**4**AAA-_. To order Type 4X 316-Grade Stainless Steel, change that digit to **9**. To order Type 4 Painted Steel, change that digit to **3**. To order Nonmetallic, change that digit to **5**. For details on these Alternate Enclosures, see **PG03300001E**.
⑤ Contact factory for other voltage options.

Cover Control ..... **Page 34-176**
Wiring Diagrams ..... **Page 34-192**
Dimensions **PG03300001E**
Accessories **PG03300001E**
Modification Codes **PG03300001E**
Technical Data **PG03300001E**
Discount Symbol **1CD1C**

Table 34-210. Class ECX26 — Combination Reversing Starter — Circuit Breaker (Continued)

Amps	Maximum hp ①			Coil Voltage @ 60 Hz ②	HMCP	Type 1/IP23		Type 4X/IP66 ④		Type 12/IP65		Component
	Motor Voltage ⑤	1-Phase	3-Phase			Catalog Number ③	Price U.S. $	Catalog Number ③	Price U.S. $	Catalog Number ③	Price U.S. $	Catalog Number ③
Frame J												
40	115	3	—	120	50A	ECX26J1AAF-_		ECX26J4AAF-_		ECX26J8AAF-_		XTAR040D00A_
	208	5	10	208		ECX26J1EAF-_		ECX26J4EAF-_		ECX26J8EAF-_		XTAR040D00E_
	230	7-1/2	15	240		ECX26J1BAF-_		ECX26J4BAF-_		ECX26J8BAF-_		XTAR040D00B_
	380	—	15	380/50 Hz		ECX26J1LAF-_		ECX26J4LAF-_		ECX26J8LAF-_		XTAR040D00L_
	460	—	30	480		ECX26J1CAF-_		ECX26J4CAF-_		ECX26J8CAF-_		XTAR040D00C_
	575	—	40	600		ECX26J1DAF-_		ECX26J4DAF-_		ECX26J8DAF-_		XTAR040D00D_
Frame K												
50	115	3	—	120	70A	ECX26K1AAW-_		ECX26K4AAW-_		ECX26K8AAW-_		XTAR050D00A_
	208	7-1/2	15	208		ECX26K1EAW-_		ECX26K4EAW-_		ECX26K8EAW-_		XTAR050D00E_
	230	10	20	240		ECX26K1BAW-_		ECX26K4BAW-_		ECX26K8BAW-_		XTAR050D00B_
	380	—	20	380/50 Hz		ECX26K1LAW-_		ECX26K4LAW-_		ECX26K8LAW-_		XTAR050D00L_
	460	—	40	480		ECX26K1CAW-_		ECX26K4CAW-_		ECX26K8CAW-_		XTAR050D00C_
	575	—	50	600		ECX26K1DAW-_		ECX26K4DAW-_		ECX26K8DAW-_		XTAR050D00D_
Frame L												
65	115	5	—	120	100A	ECX26L1AAW-_		ECX26L4AAW-_		ECX26L8AAW-_		XTAR065D00A_
	208	10	20	208		ECX26L1EAW-_		ECX26L4EAW-_		ECX26L8EAW-_		XTAR065D00E_
	230	15	25	240		ECX26L1BAW-_		ECX26L4BAW-_		ECX26L8BAW-_		XTAR065D00B_
	380	—	30	380/50 Hz		ECX26L1LAW-_		ECX26L4LAW-_		ECX26L8LAW-_		XTAR065D00L_
	460	—	50	480		ECX26L1CAW-_		ECX26L4CAW-_		ECX26L8CAW-_		XTAR065D00C_
	575	—	60	600		ECX26L1DAW-_		ECX26L4DAW-_		ECX26L8DAW-_		XTAR065D00D_
Frame M												
80	115	7-1/2	—	120	100A	ECX26M1AAG-_		ECX26M4AAG-_		ECX26M8AAG-_		XTAR080F00A_
	208	15	25	208		ECX26M1EAG-_		ECX26M4EAG-_		ECX26M8EAG-_		XTAR080F00E_
	230	15	30	240		ECX26M1BAG-_		ECX26M4BAG-_		ECX26M8BAG-_		XTAR080F00B_
	380	—	50	380/50 Hz		ECX26M1LAG-_		ECX26M4LAG-_		ECX26M8LAG-_		XTAR080F00L_
	460	—	60	480		ECX26M1CAG-_		ECX26M4CAG-_		ECX26M8CAG-_		XTAR080F00C_
	575	—	75	600		ECX26M1DAG-_		ECX26M4DAG-_		ECX26M8DAG-_		XTAR080F00D_
Frame N												
95	115	7-1/2	—	120	100A	ECX26N1AAG-_		ECX26N4AAG-_		ECX26N8AAG-_		XTAR095F00A_
	208	15	25	208		ECX26N1EAG-_		ECX26N4EAG-_		ECX26N8EAG-_		XTAR095F00E_
	230	15	40	240		ECX26N1BAG-_		ECX26N4BAG-_		ECX26N8BAG-_		XTAR095F00B_
	380	—	60	380/50 Hz		ECX26N1LAG-_		ECX26N4LAG-_		ECX26N8LAG-_		XTAR095F00L_
	460	—	75	480		ECX26N1CAG-_		ECX26N4CAG-_		ECX26N8CAG-_		XTAR095F00C_
	575	—	100	600		ECX26N1DAG-_		ECX26N4DAG-_		ECX26N8DAG-_		XTAR095F00D_
Frame P												
115	115	10	—	120	150A	ECX26P1AAH-_		ECX26P4AAH-_		ECX26P8AAH-_		XTAR115G00A_
	208	25	40	208		ECX26P1EAH-_		ECX26P4EAH-_		ECX26P8EAH-_		XTAR115G00E_
	230	25	50	240		ECX26P1BAH-_		ECX26P4BAH-_		ECX26P8BAH-_		XTAR115G00B_
	380	—	60	380/50 Hz		ECX26P1LAH-_		ECX26P4LAH-_		ECX26P8LAH-_		XTAR115G00L_
	460	—	100	480		ECX26P1CAH-_		ECX26P4CAH-_		ECX26P8CAH-_		XTAR115G00C_
	575	—	125	600		ECX26P1DAH-_		ECX26P4DAH-_		ECX26P8DAH-_		XTAR115G00D_

① 1 hp = 0.746 kW.
② Voltage is listed @ 60 Hz unless otherwise noted. Other voltages available upon request.
③ Select proper "XTOB" Overload Amperage range as per motor FLA, see **Table 34-200**.
④ These are the Catalog Numbers for Type 4X 304-Grade Stainless Steel, as indicated by the seventh digit **4**. Example: ECX26B**4**AAA-_. To order Type 4X 316-Grade Stainless Steel, change that digit to **9**. To order Type 4 Painted Steel, change that digit to **3**. To order Nonmetallic, change that digit to **5**. For details on these Alternate Enclosures, see **PG03300001E**.
⑤ Contact factory for other voltage options.

Cover Control ..... **Page 34-176**
Wiring Diagrams ..... **Page 34-192**
Dimensions **PG03300001E**
Accessories **PG03300001E**
Modification Codes **PG03300001E**
Technical Data **PG03300001E**
Discount Symbol **1CD1C**

Wiring Diagrams

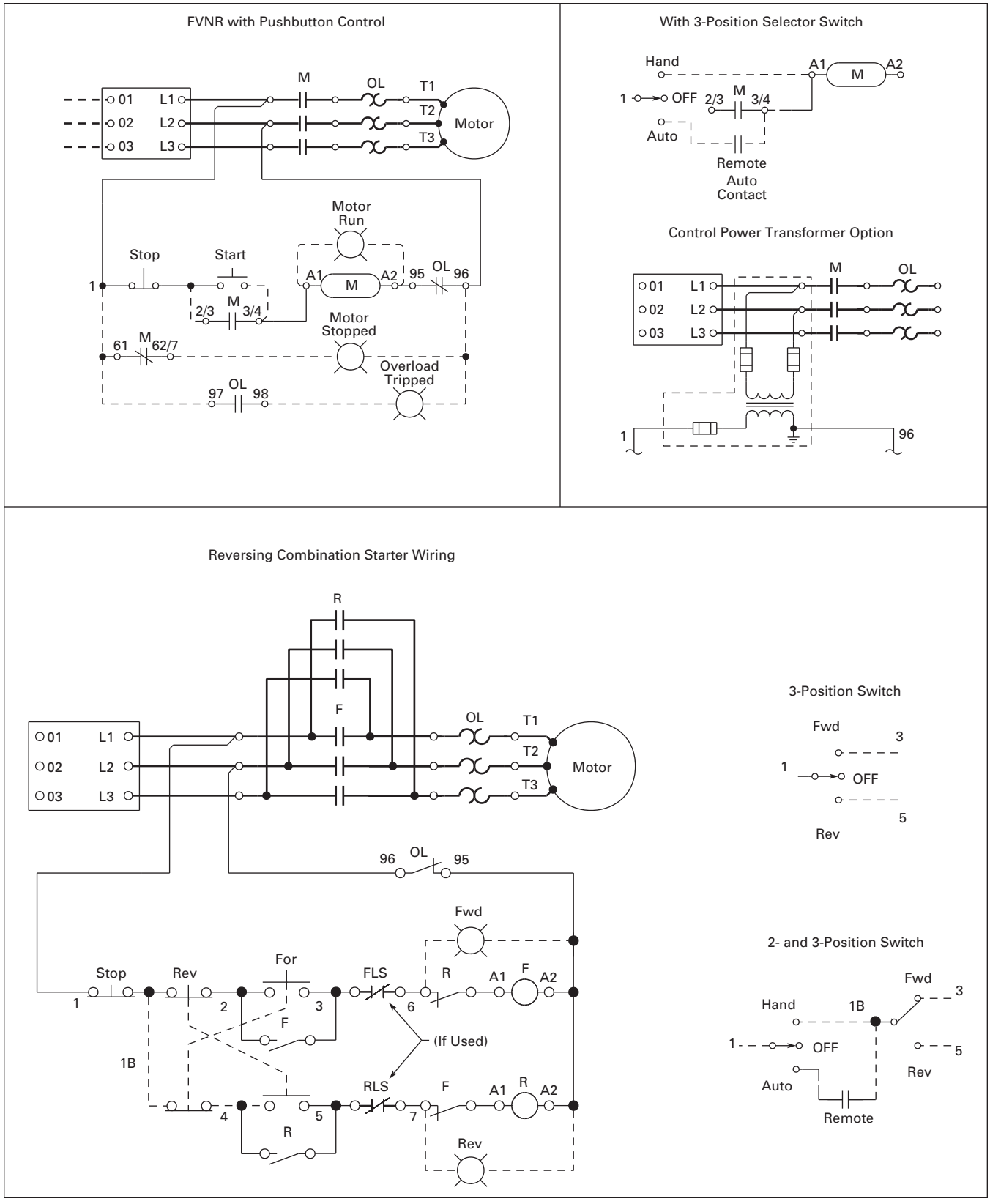

Figure 34-145. Typical Wiring Diagram

Remote Pilot Devices

2-Wire Control

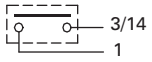

Not for Use with Auto Reset OL Relays

3-Wire Control

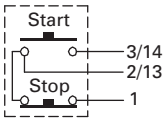

When More Than One Pushbutton Station is Used, Omit Connector "A" and Connect per Sketch Below

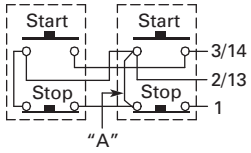

Connections for Non-reversing Starter

Figure 1
Front View of Panel

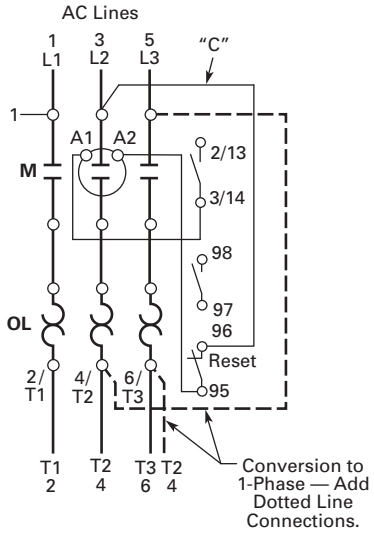

Separate Control

Remove Wire "C" if Supplied and Connect Separate Control Lines to the Number 1 Terminal on the Remote Pilot Device and to the Number 96 Terminal on the Overload Relay.

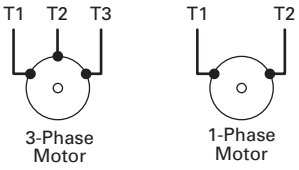

Local Control Options (If Used)
Full Voltage Non-reversing Starters

Figure A START/STOP Pushbuttons

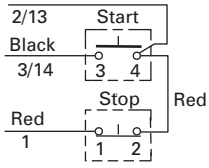

Figure B START/STOP Selector Switch

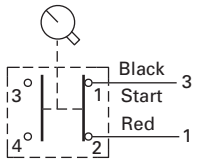

Figure C 3-Position Selector Switch

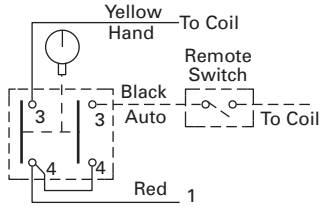

Figure D 2-Positon Selector Switch

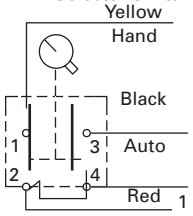

Figure E Pilot Light (Motor RUN)
Connect to Coil Terminals "A1" & "A2"

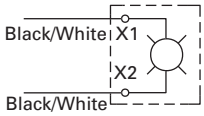

Figure G Overload Tripped

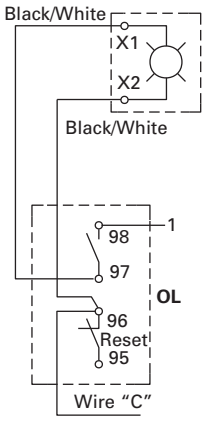

Figure F Pilot Light (Motor Stop)

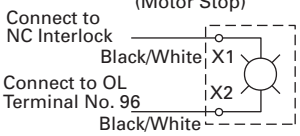

Figure 34-146. Typical Wiring Diagram — Non-combination Starters (Non-reversing)

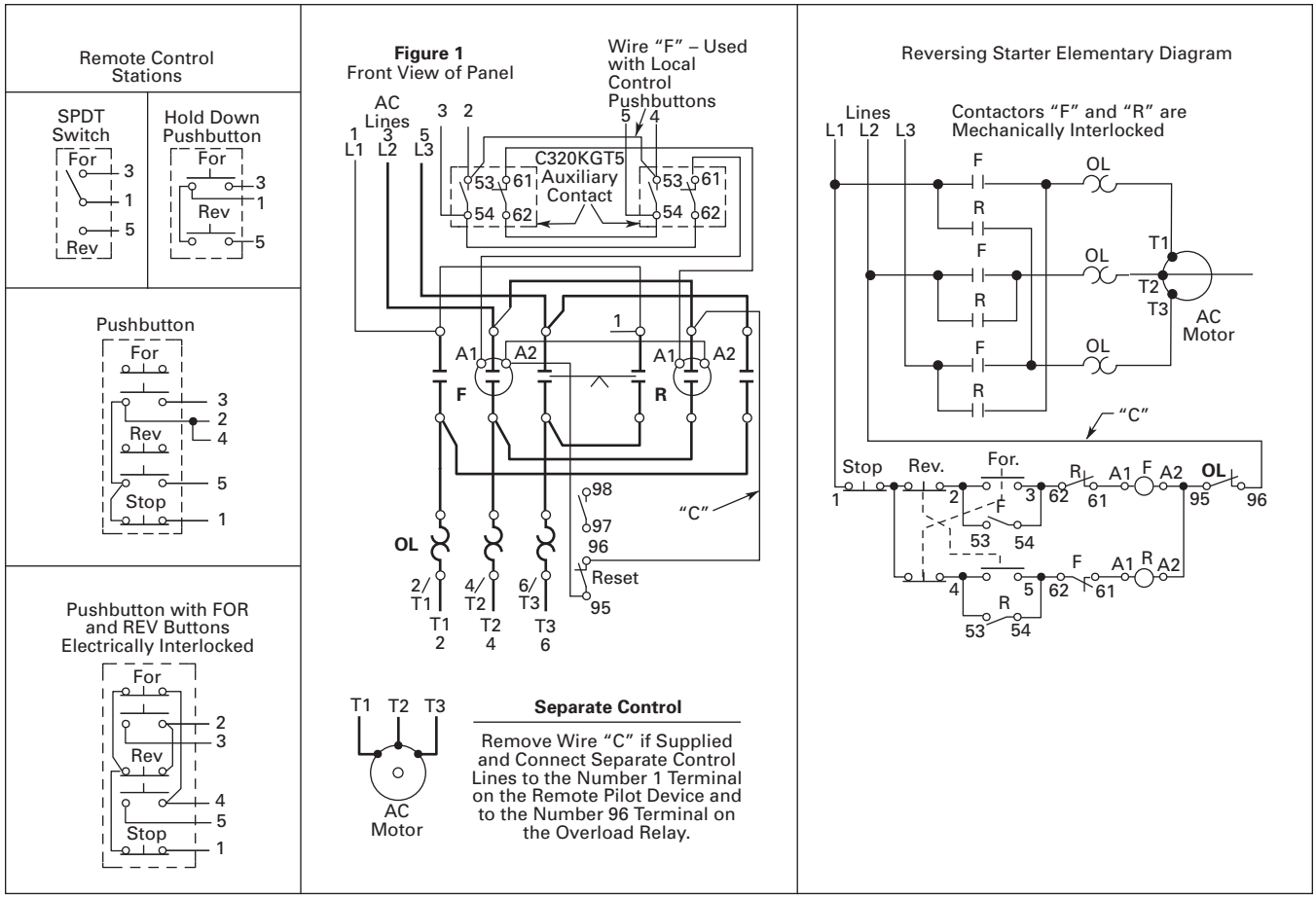

Figure 34-147. Typical Wiring Diagram — Non-combination Starters (Reversing)

Dimensions

Enclosure Boxes

Type 1, 3R, 4, 4X, 12 *XT* Non-combination Starters

Table 34-211. Class 09 — FVNR Starters (Non-combination)

IEC Size (Frame / Amps)	Box Number	Ship Weight in kg [Lb]
B – H / 7 – 25A	**1**	3.2 [7]
B – H / 7 – 32A	**5A**	6.4 [14]
B – H / 7 – 32A	**5P**	4.5 [10]
J – L / 40 – 65A	**5A**	18.6 [41]
J – L / 40 – 65A	**5P**	17.7 [39]
M – Q / 80 – 150A	**8**	15.9 [35]

Table 34-212. Class 10 — FVR Starters (Non-combination)

IEC Size (Frame / Amps)	Box Number	Ship Weight in kg [Lb]
B – H / 7 – 32A	**2**	5.9 [13]
B – H / 7 – 32A	**5A**	6.8 [15]
B – H / 7 – 32A	**5P**	5.0 [11]
J – L / 40 – 65A	**2**	18.2 [40]
J – L / 40 – 65A	**6A**	24.5 [45]
J – L / 40 – 65A	**6P**	19.1 [42]
M – Q / 80 – 125A	**4**	22.7 [50]
M – Q / 80 – 150A	**8**	18.6 [41]

Table 34-213. Class 11 — FVNR Starters (Non-combination with CPT)

IEC Size (Frame / Amps)	Box Number	Ship Weight in kg [Lb]
B – H / 7 – 32A	**2**	6.4 [14]
B – H / 7 – 32A	**5A**	8.4 [19]
B – H / 7 – 32A	**5P**	6.6 [15]
J – L / 40 – 65A	**2**	19.5 [43]
J – L / 40 – 65A	**6A**	23.2 [51]
J – L / 40 – 65A	**6P**	21.8 [48]
M – Q / 80 – 125A	**4**	23.6 [52]
M – Q / 80 – 150A	**8**	24.1 [53]

Type 1, 3R, 4, 4X, 12 *XT* Fusible/Non-fusible Starters

Table 34-214. Class 19 — FVNR Combination with Disconnect Switch

IEC Size (Frame / Amps)	Box Number	Ship Weight in kg [Lb]
B – J / 7 – 40A	**7A**	8.6 [19]
B – J / 7 – 40A	**7P**	6.8 [15]
K – N / 50 – 105A	**8**	24.1 [53]
K – N / 50 – 105A	**8P**	22.2 [49]

Table 34-215. Class 19 — FVNR Combination with Disconnect Switch and Fuseblock

IEC Size (Frame / Amps)	Box Number	Ship Weight in kg [Lb]
B – J / 7 – 40A	**7A**	13.6 [30]
B – J / 7 – 40A	**7P**	11.8 [26]
K – M / 65 – 85A	**8**	25 [55]
K – M / 65 – 85A	**8P**	23.2 [51]

Table 34-216. Class 20 — FVR Combination with Disconnect Switch

IEC Size (Frame / Amps)	Box Number	Ship Weight in kg [Lb]
B – J / 7 – 40A	**7A**	9.1 [20]
B – J / 7 – 40A	**7P**	7.3 [16]
K – N / 50 – 105A	**8**	26.3 [58]
K – N / 50 – 105A	**8P**	25 [55]

Table 34-217. Class 20 — FVR Combination with Disconnect Switch and Fuseblock

IEC Size (Frame / Amps)	Box Number	Ship Weight in kg [Lb]
B – J / 7 – 40A	**7A**	14.1 [31]
B – J / 7 – 40A	**7P**	12.3 [27]
K – M / 65 – 85A	**8**	25.4 [56]
K – M / 65 – 85A	**8P**	23.6 [52]

Type 1, 3R, 4, 4X, 12 *XT* HMCP Combination Starters

Table 34-218. Class 25 — FVNR Combination with HMCP

IEC Size (Frame / Amps)	Box Number	Ship Weight in kg [Lb]
B – H / 7 – 32A	**7A**	10 [23]
B – H / 7 – 32A	**7P**	8.2 [18]
J – L / 40 – 65A	**7A**	11 [24]
J – L / 40 – 65A	**7P**	8.9 [20]
M – Q / 80 – 125A	**8**	31.8 [70]

Table 34-219. Class 26 — FVR Combination with HMCP

IEC Size (Frame / Amps)	Box Number	Ship Weight in kg [Lb]
B – H / 7 – 32A	**7A**	12 [26]
B – H / 7 – 32A	**7P**	10 [22]
J – L / 40 – 65A	**7A**	13 [29]
J – L / 40 – 65A	**7P**	11 [25]
M – P / 80 – 115A	**8**	31.8 [70]

Box Dimensions

For Box Dimensions, see *Enclosed Control Product Guide*, PG03300001E.

34

Modification Codes

Table 34-220. A — Ammeters, Auxiliary Contacts, Accelerating Relays, Autotransformers

Modification	Catalog Number Suffix	Description	Adder U.S. $
Ammeter	**A1**	Panel Type Wired to Current Transformer in Line 1, Type 1, 12	
		Panel Type Wired to Current Transformer in Line 1, Type 3R, 4X	
	A2	Panel Type, Selector Switch and 3 Current Transformers Wired to Ammeter via Switch, Type 1, 12	
		Panel Type, Selector Switch and 3 Current Transformers Wired to Ammeter via Switch, Type 3R, 4X	
	A3	Miniature (Single-Phase), Type 1, 12	
	A4	Miniature with Selector Switch, Type 1, 12	
	A5	Switchboard (Single-Phase), Type 1, 12	
		Switchboard (Single-Phase), Type 3R, 4X	
	A6	Switchboard with Selector Switch, Type 1, 12	
		Switchboard with Selector Switch, Type 3R, 4X	
	A7	3-Panel Type (Single-Phase), Type 1, 12	
		3-Panel Type (Single-Phase), Type 3R, 4X	
	A10	3 Miniature (Single-Phase), Type 1, 3R, 4X, 12	
	A11	3 Switchboard Type (Single-Phase), Type 1, 12	
		3 Switchboard Type (Single-Phase), Type 3R, 4X	
	A12	Ammeter Order by Description, Type 1, 3R, 4X, 12	
Top Mounted Auxiliary Contacts ① (Unwired)	**A13**	1NO	
	A14	1NC	
	A15	1NO-1NC	
	A16	2NO	
	A17	2NC	
	A18	2NO-1NC	
	A19	1NO-2NC	
	A20	3NO	
IEC Sizes B – L Only (Unwired) *XT* Series	**A21**	3NC	
	A22	3NO-1NC	
	A23	2NO-2NC	
	A24	1NO-3NC	
	A25	4NO	
	A26	4NC	
Side Mounted Auxiliary Contacts ②	**A27**	1NO	
	A28	1NC	
	A29	1NO-1NC	
	A30	2NO	
	A31	2NC	
	A32	2NO-1NC	
	A33	1NO-2NC	
	A34	3NO	

① Top mounted auxiliary contacts cannot be added to contactors in Box 1 (Type 1).

② Available on *XT* Starters for 40A and greater only.

Table 34-220. A — Ammeters, Auxiliary Contacts, Accelerating Relays, Autotransformers (Continued)

Modification	Catalog Number Suffix	Description	Adder U.S. $
Side Mounted Auxiliary Contacts, continued ③	**A35**	3NC	
	A36	3NO-1NC	
	A37	2NO-2NC	
	A38	1NO-3NC	
	A39	4NO	
	A40	4NC	
Auxiliary Contacts	**A42**	Contacts Mounted on Operating Mechanism of Disconnect Switch, 1NO-1NC	
	A43	Contacts Mounted on Operating Mechanism of Disconnect Switch, 2NO-2NC	
	A44	With Auxiliary Contact Omitted	
Accelerating Relay	**A46**	For 2-Speed	

③ Available on *XT* Starters for 40A and greater only.

Table 34-221. B — Breaker Modifications, Backspin Timer, Undervoltage Release, Bell Alarm, Bus Choke

Modification	Catalog Number Suffix	Description	Adder U.S. $
Breaker	**B1**	1NO-1NC Auxiliary Contact on Breaker	
	B2	2NO-2NC Auxiliary Contacts on Breaker	
	B3	Shunt Trip on Circuit Breaker — 48 – 127V AC or DC	
	B4	Shunt Trip on Circuit Breaker — 9 – 24V AC or DC	
	B5	Shunt Trip on Circuit Breaker — 208 – 380V AC	
	B6	Shunt Trip on Circuit Breaker — 415 – 600V AC or 220 – 250V DC	
	B8	Undervoltage Release for Breaker	
	B9	Current Limiter Mounted to Breaker	
	B10	Breaker — Order by Description	
	B11	Thermal Magnetic Breaker	
Backspin Timer	**B12**	180 Seconds	
Undervoltage Release	**B13**	Undervoltage Release for Circuit Breaker — 208 – 240V AC	
	B14	Undervoltage Release for Circuit Breaker — 380 – 480V AC	
	B15	Undervoltage Release for Circuit Breaker — 525 – 600V AC	
Bell Alarm	**B16**	Bell Alarm for Circuit Breaker	

Discount Symbol **1CD1C**

Table 34-222. C — Control Power Transformer, *IT.* Power Supplies, Control Relays, Cover Control (not elsewhere defined), Current Transformers, Compelling Relay, Control Wiring, Control Circuit Breaker, Separate Control, Customer-Supplied Components, Custom for Advantage, Contactors, Counter, E-Stop Relay, DC/AC Interface, Separate Source Disconnect, Bypass Contactors

Modification	Catalog Number Suffix	Description	Adder U.S. $
Control Power Transformers Make sure 8th character specifies primary/ secondary voltage.	**C1**	Standard Size Control Transformer, 120V/60 Hz, 110V/50 Hz Secondary with 2 Primary and 1 Secondary Fuse	
	C2	Standard Size Control Transformer, 24V/60 Hz Secondary with 2 Primary and 1 Secondary Fuse	
	C42	50 VA Extra Capacity CPT 120V/60 Hz, 110V/50 Hz with 2 Primary and 1 Secondary	
	C3	100 VA Extra Capacity CPT, 120V/60 Hz, 110V/50 Hz Secondary with 2 Primary and 1 Secondary Fuse	
	C4	100 VA Extra Capacity CPT, 24V/60 Hz Secondary with 2 Primary and 1 Secondary Fuse	
	C5	200 VA Extra Capacity CPT, 120V/60 Hz, 110V/50 Hz Secondary with 2 Primary and 1 Secondary Fuse	
	C6	200 VA Extra Capacity CPT, 24V/60 Hz Secondary with 2 Primary and 1 Secondary Fuse	
	C7	300 VA Extra Capacity CPT, 120V/60 Hz, 110V/50 Hz Secondary with 2 Primary and 1 Secondary Fuse	
	C8	400 VA Extra Capacity CPT, 120V/60 Hz, 110V/50 Hz Secondary with 2 Primary and 1 Secondary Fuse	
	C9	1 kVA Extra Capacity CPT, 120V/60 Hz, 110V/50 Hz Secondary with 2 Primary and 1 Secondary Fuse	
	C10	2 kVA Extra Capacity CPT, 120V/60 Hz, 110V/50 Hz Secondary with 2 Primary and 1 Secondary Fuse	
	C11	Control Transformer — Order by Description	
	C34	CPT with Power Supply for ***XT***	
Power Supplies	**C27**	Separate Control 120V AC to 24V DC	
	C28	Power Supply with Extra Capacity — Order by Description	
Control Relays	**C12**	4-Pole Interposing Relay, 600V (2NO/ 2NC)	
	C13	Run Relay, 24V DC (MVX)	
	C14	4-Pole, Unwired, A600 Rtg. — 2NO-2NC	
	C15	8-Pole, Unwired, A600 Rtg. — 4NO-4NC	
	C16	Control Relay — Order by Description	
Cover Control	**C17**	Convert Position 7 to E30 Type Cover Control	
	C19	Lock-Off Attachment Added on Cover Control	
	C29	Change to E22 (22 mm) Cover Controls	

Table 34-222. C — Control Power Transformer, *IT.* Power Supplies, Control Relays, Cover Control (not elsewhere defined), Current Transformers, Compelling Relay, Control Wiring, Control Circuit Breaker, Separate Control, Customer-Supplied Components, Custom for Advantage, Contactors, Counter, E-Stop Relay, DC/AC Interface, Separate Source Disconnect, Bypass Contactors (Continued)

Modification	Catalog Number Suffix	Description	Adder U.S. $
Current Transformer(s)	**C21**	In Phase 1	
	C22	In Phases 1 and 2	
	C23	In 3 Phases	
Control Wiring	**C26**	Omit Control Wiring	
	C30	With Separate Control Wiring and Two 250V Fuses in Holder	
	C31	With Common Control Wiring and Two600V (Class C) Fuses in Holder	
	C33	Control Wiring Type — Order by Description	
Control Circuit Breaker	**C32**	Order by Description	
Separate Control	**C35**	Wired for Separate Control (Reduced Voltage)	
Customer Supplied Components	**C36**	Customer Supplied Components to Be Installed	
	C37	Customer Supplied Wiring Diagram to Use	
Contactor/ Starter	**C40**	Contactor/Starter — Order by Description	
Counter	**C41**	Operations Counter	
E-Stop Relay	**C43**	E-Stop Relay (DeviceNet)	
Separate Source Disconnect	**C45**	IEC Separate Source Disconnect for Control Circuitry	

Table 34-223. D — Device Labels

Modification	Catalog Number Suffix	Description	Adder U.S. $
Device Labels	**D1**	(Each Label)	
	D12	Alternator Omitted (Deduct Price)	

Discount Symbol **1CD1C**

Table 34-224. E — Enclosure Modifications, Elapsed Time Meter, Duplex Outlet, Enclosure for Starter, Enclosure Clear Cover, Enclosure Material

Modification	Catalog Number Suffix	Description	Adder U.S. $
Enclosure Modifications	**E3**	Oversize Enclosure	
	E4	Enclosure — Order by Description	
	E8	Service Entrance Rating w/Ground Bar	
	E11	Safety Door Interlock	
Elapsed Time Meter	**E9**	Wired Across Coil, Type 1, 12	
		Wired Across Coil, Type 3R, 4X	
	E10	Elapsed Time Meter — Order by Description	
Duplex Outlet	**E12**	Convenience Duplex Outlet Mounted in Side of Enclosure	
Enclosure Clear Cover for ***XT***	**E19**	Clear Cover for Halyester Enclosure Nonmetallic	
Enclosure Material	**E20**	Convert to 316 Stainless Steel	
	E21	Convert from Type 3R to Stainless Steel	

Table 34-225. F — Fuse Clips, Fuse Blocks, Fungus Protection, Fingerproof Covers, EMI Filter

Modification	Catalog Number Suffix	Description	Adder U.S. $
Fuse Blocks	**F4**	Power Fuses Included — Order by Description	
	F5	30 Ampere Control Circuit Fuseholder (KTK) Mounted on Panel (Unwired), Fuse Not Supplied	
	F6	30 Ampere Control Circuit Fuseholder Mounted on Panel (Unwired), FNQR Fuse Supplied	
	F7	3-Pole Power Fuseholder Mounted on Front Contactor	
	F8	Separate Fusing of Control Power Supply	
	F10	Blown Fuse Indicator (Not for PFC)	
	F21	Class CC Fuses	

Table 34-226. G — Ground Fault Relay, Grounding

Modification	Catalog Number Suffix	Description	Adder U.S. $
Ground Fault Relay	**G1**	Ground Fault Relay (Wired)	
	G3	Ground Fault Relay (Unwired)	
Grounding	**G5**	Special Grounding — Order by Description	
	G7	Ground Fault Protection and Monitoring Panel	

Table 34-227. H — Heater (Space)

Modification	Catalog Number Suffix	Description	Adder U.S. $
Space Heater	**H1**	Space Heater and Thermostat	
	H2	Space Heater and NC Interlock	

Table 34-228. N — Nameplates

Modification	Catalog Number Suffix	Description	Adder U.S. $
Nameplates	**N1**	Enclosure Nameplates	

Table 34-229. P — Pilot Lights, Pushbuttons, Phase Relays, Potential Transformers, Power Factor Correction Capacitors, Program Timer, Percentage Timer, Photocell

Modification	Catalog Number Suffix	Description	Adder U.S. $
Push-to-Test Pilot Lights	**P1**	Push-to-Test Pilot Light (Red RUN) Wired to Coil	
	P2	Push-to-Test Pilot Light (Green OFF) Wired in Series with Auxiliary Contact	
	P3	Combination of **P1** and **P2** Above	
	P4	Push-to-Test Pilot Light (Amber RUN) Wired to Coil	
	P49	Push-to-Test Pilot Light (Green RUN)	
	P57	Push-to-Test Pilot Light — Green STOP	
Pushbuttons	**P5**	EMERGENCY STOP — Mushroom Head	
	P6	Pushbutton Omitted	
	P7	START/STOP	
	P8	ON/OFF	
	P9	START	
	P10	ON	
	P11	OFF	
	P12	FORWARD/REVERSE/STOP	
	P13	FAST/SLOW/STOP	
	P14	FAST/OFF/SLOW	
	P15	HIGH/LOW/STOP	
	P16	HIGH/LOW	
	P17	SLOW/FAST	
	P18	Pushbutton with Legend Plate	
	P52	UP/STOP/DOWN	
	P53	OPEN/STOP/CLOSE	
Pilot Lights	**P19**	With 1 Amber Pilot Light Marked POWER AVAILABLE Wired to Load Side of 2 Fuses or Circuit Breaker	
	P20	Pilot Light (Amber RUN) Wired to Coil	
	P21	With 1 Red Pilot Light Marked RUN Wired thru NO Auxiliary Contact	
	P22	With 1 Push-to-Test Red Light Marked RUN Wired thru NO Auxiliary Contact	
	P23	Pilot Light — Red RUN	
	P24	Pilot Light — Red ON	
	P25	Pilot Light — Green OFF	
	P26	Pilot Light — Order by Description	
	P29	Pilot Light — Red STOP	

Discount Symbol **1CD1C**

Table 34-229. P — Pilot Lights, Pushbuttons, Phase Relays, Potential Transformers, Power Factor Correction Capacitors, Program Timer, Percentage Timer, Photocell (Continued)

Modification	Catalog Number Suffix	Description	Adder U.S. $
Pilot Lights (Continued)	**P61**	Pilot Light — Green STOP	
	P62	FORWARD/REVERSE Red Pilot Lights	
	P63	UP/DOWN Red Pilot Lights	
	P64	OPEN/CLOSE Red Pilot Lights	
	P65	HIGH/LOW Red Pilot Lights	
	P66	FAST/SLOW Red Pilot Lights	
	P67	Green RUN Light	
	P68	LED Bulbs	
	P69	Blue OVERLOAD Light	
Illuminated Pushbutton	**P27**	Illuminated Pushbutton — Order by Description	
Phase Loss Relay	**P28**	Phase Loss Relay	
Phase Reversal Relay	**P30**	Phase Reversal Relay	
Phase Unbalance Relay	**P32**	Phase Unbalance Relay	
Phase Monitoring Relay	**P34**	Phase Monitoring Relay	
Power Factor Correction Capacitors	**P38**	/F1 20 kVar, /F2 25 kVar, /F3 30 kVar, /F4 35 kVar, /F5 40 kVar, /F6 45 kVar, /F7 50 kVar, /F8 60 kVar; /F9 70 kVar, /F10 75 kVar, /F11 80 kVar, /F12 90 kVar, /F13 100 kVar, /F14 125 kVar, /F15 150 kVar, /F16 175 kVar; /F17 200 kVar, /F18 225 kVar, /F19 250 kVar, /F20 300 kVar, /F21 350 kVar, /F22 400 kVar	
Potential Transformers	**P39**	Potential Transformer — Wired L1 – L2	
	P40	Potential Transformer — Wired L1– L2 and L2 – L3	
	P41	Potential Transformer — 3 Phases	
Program Timers	**P43**	15-Minute Program Timer	
	P44	24-Hour Program Timer	
	P45	7-Day Program Timer with Day Omission Feature	
Percentage Timers	**P47**	15-Minute Percentage Timer	
	P48	60-Minute Percentage Timer	

Table 34-230. Q — IQ Products, DN50

Modification	Catalog Number Suffix	Description	Adder U.S. $
IQ Products	**Q1**	IQ 500	
	Q3	IQ 1000	
	Q5	IQ 4000	
IQ Data Metering Module	**Q12**	IQ Data Metering Module	
	Q14	IQ 220 with Cable	
DN50	**Q13**	DeviceNet Input/Output Module	

Table 34-231. R — Ramp, Relays, Solid-State Electronic Overload Relays, Resets, Overload Relay Modifications, Reversing, DeviceNet Interface

Modification	Catalog Number Suffix	Description		Adder U.S. $
Relay	**R2**	Overvoltage Relay		
Solid-State Electronic Overload Relay ①	IEC Frame	Full Load Current Adjustment Range (A)	3-Phase Automatic/ Manual Reset	
			Class 5/10/20/30	
	Catalog Number Suffix ➡ ②		**R61_**	
	B & C	0.1 – 0.5 0.4 – 2.0 1.0 – 5.0 1.6 – 8.0	**A** **B** **C** **D**	
	C & D	0.1 – 0.5 0.4 – 2.0 1.0 – 5.0 1.6 – 8.0 6.4 – 32	**A** **B** **C** **D** **E**	
	D	9 – 45	**F**	
		15 – 75	**G**	
	F & G	22 – 110	**H**	
	G	30 – 150	**J**	
	N/A	96 – 300	**C**	
	N/A	192 – 600	**C**	
Resets	**R5**	Change External Reset to Internal Reset — Hole Covered with Plug		
	R6	Internal Reset — No Hole Plug		
	R44	Manual Reset Only on Overload Relay		
	R45	Auto Reset Only on Overload Relay		
	R47	Internal Trip Indicator — No External Reset		
	R71	N3R Reset Boot Added (Type 1/12 Only)		
DeviceNet Interface	**R69**	DeviceNet Interface		
	R65	Standard Reset for DeviceNet		
	R66	Lighted Reset for DeviceNet		
	R67	Trip Indicator for DeviceNet		

① Features:
- Self-Powered
- Phase Loss Protection
- Current Adjustment Knob
- ± 1% Repeat Accuracy
- 1NO and 1NC Isolated Contacts

② Complete Modification Code includes overload range. Example **R61/C.**

34

Discount Symbol **1CD1C**

Table 34-232. S — System Voltage, Selector Switches, Suppressor, Incomplete Sequence Protection, Single-Phase Jumper, Surge Capacitor, Speed Potentiometer

Modification	Catalog Number Suffix	Description	Adder U.S. $
System Voltage Selection	**S1**	System Voltage Selection for Internal Components	
		/H1 208V 60 Hz /H2 240V 60 Hz /H3 277V 60 Hz, 1-Ph /H4 480V 60 Hz /H5 600V 60 Hz /H6 796V 60 Hz /H7 220V 50 Hz /H8 380V 50 Hz /H9 415V 50 Hz /H10 550V 50 Hz /H11 660V 50 Hz /H12 380V 60 Hz /H13 1500V 60 Hz	
	S2	System Voltage Selection — Specify on Order	
Selector Switches ①	**S3**	HAND/OFF/AUTO	
	S4	HAND/AUTO	
	S5	HAND/OFF/AUTO Selector Switch with 1 Red RUN Pilot Light	
	S6	RUN/OFF/AUTO	
	S7	AUTO/OFF/TEST	
	S8	AUTO/OFF/TEST Selector Switch with 1 Red RUN Pilot Light	
	S9	AUTO/OFF/TEST Selector Switch with 1 Red RUN Pilot Light and 1 Green Pilot Light	
	S10	OFF/AUTO	
	S11	START/STOP	
	S12	OFF/ON	
	S13	HIGH/LOW	
	S14	FAST/OFF/SLOW	
	S15	SLOW/FAST	
	S16	FORWARD/REVERSE	
	S17	HIGH/OFF/LOW	
	S18	HIGH/LOW/OFF/AUTO	
	S21	HAND/OFF/AUTO Spring Return from Left	
	S41	OPEN/OFF/CLOSE	
	S42	FORWARD/OFF/REVERSE	
	S43	FAST/OFF/SLOW/AUTO	
	S40	Selector Switch — Order by Description	
Suppressor	**S24**	Transient Suppressor Mounted on Magnet Coil	
Sequence Timer	**S26**	Sequence Timer (Pump Panels)	
Sequence Protection	**S27**	Incomplete Sequence Protection	
Single Phase	**S29**	Convert Contactor or Starter from Three-Phase to Single-Phase — Install Jumper	
	S30	Single-Phase Rev. 120V	
	S31	Single-Phase Rev. 240V	

① When using 3-position selector switch with magnetic lighting contactor, mod **C20** must also be used (ECL04, ECL13, ECL15).

Table 34-233. T — Timers, Time Delay Relays, Terminal Blocks, Terminal Points, Ring Lug Connections

Modification	Catalog Number Suffix	Description	Adder U.S. $
Timers	**T1**	Pneumatic Timer Installed on Contactor, Unwired, 30 Sec. Max.	
	T2	Pneumatic Timer Installed on Contactor, Unwired, 180 Sec. Max.	
	T3	Pneumatic Timer Mounted in Enclosure, Unwired, 180 Sec. Max.	
	T4	Solid-State ON Delay Timer (1 – 30 Sec.)	
	T5	Solid-State ON Delay Timer (30 – 300 Sec.)	
	T25	Timer — Order by Description	
Time Delay Relays	**T6**	Time Delay Relay, 3 Minutes Maximum, Unwired, ON DELAY	
	T7	Time Delay Relay, 3 Minutes Maximum, Unwired, OFF DELAY	
	T8	Time Delay Low Voltage Release Relay	
Terminal Blocks	**T9**	With 1 Single Circuit Terminal Block, Unwired	
	T10	With 2 Single Circuit Terminal Block, Unwired	
	T24	Power Terminal Block for DeviceNet Overload	
Terminal Points	**T11**	With 6 Terminal Points, Unwired	
	T12	With 12 Terminal Points, Unwired	
	T13	With 18 Terminal Points, Unwired	
	T14	Terminal Point per Customer Specification, Unwired (Price Each)	
	T15	Terminal Point per Customer Specification, Wired (Price Each)	
	T21	3 Terminals Mounted Between Contactor and Overload for Power Factor Capacitors — Sizes 0 – 2	
	T22	3 Terminals Mounted Between Contactor and Overload for Power Factor Capacitors — Sizes 3 – 4	
Ring Lug Connections	**T17**	Ring Lug Connections on Control Wires	

Table 34-234. U — Undervoltage Relay, Time Delay Undervoltage Relay

Modification	Catalog Number Suffix	Description	Adder U.S. $
Undervoltage Relays	**U1**	Undervoltage Relay, Non-adjustable	
	U2	Undervoltage Relay, Adjustable	
Time Delay Undervoltage Relays	**U4**	Time Delay Undervoltage Relay, Non-adjustable	
	U5	Time Delay Undervoltage Relay, Adjustable	
Under- and Overvoltage Relay	**U7**	Under- and Overvoltage Relay	

Discount Symbol **1CD1C**

Table 34-235. V — Voltmeter, Varmeter, Vacuum Starter

Modification	Catalog Number Suffix	Description	Adder U.S. $
Voltmeters	**V1**	1 Panel Type Voltmeter Wired L1 – L2	
	V2	Panel Type Voltmeter and Selector Switch Wired to Read Three Line Voltages	
	V3	Miniature Voltmeter Wired L1 – L2	
	V4	Miniature Voltmeter and Selector Switch Wired to Read Three Line Voltages	
	V5	Switchboard Type Voltmeter Wired L1 – L2	
	V6	Switchboard Type Voltmeter and Selector Switch Wired to Read Three Line Voltage	
	V7	3 Panel Type Voltmeters Wired in Each Phase	
	V8	3 Miniature Voltmeters Wired in Each Phase	
	V9	3 Switchboard Type Voltmeters Wired in Each Phase	
	V10	Voltmeter — Order by Description	

Table 34-236. W — Wattmeter, Watt-Hour Meter, Wiremarkers, Wiring Diagram

Modification	Catalog Number Suffix	Description	Adder U.S. $
Wattmeter	**W1**	Wattmeter	
Watt-Hour Meter	**W3**	Watt-Hour Meter	
	W5	Watt-Hour Meter with Demand Attachment	
Wiremarkers	**W7**	Wiremarkers	
	W8	Wiremarkers — Order per Customer Diagram or Specifications	
	W9	Wiremarkers — Order by Description	
Wiring Diagram	**W12**	Reduced Copy of Custom Wiring Diagram Laminated on Inside of Door	

Discount Symbol **1CD1C**

Contents

Description	*Page*
Cover Control	**34-204**
Catalog Number Selection	**34-203**
Product Selection	**34-206**
Dimensions	**34-209**
Modification Codes	**34-196**
Reference Data	**34-210**



Enclosed XT CMC

Product Description

Eaton's Cutler-Hammer® ***XT*** Line includes IEC Contactors, Starters and Combination Motor Controllers (CMCs). Designed to meet International Standards, the Enclosed Control ***XT*** Line (ECX) carries UL and cUL certifications.

Features and Benefits

- ON/OFF rotary handle with lockout provision
- Visible trip indication
- Test trip function
- Motor applications from 0.11A to 32A
- Class 10 overload protection
- Built-in heater and magnetic trip elements to protect the motor
- Phase loss sensitivity
- Type 2 coordination
- Ambient compensated up to 55°C [140°F]
- Control inputs located at front of starter for easy access and wiring
- Wide range of coils
- DIN Rail mount — XTSC…BB_
- Mounting plates — XTSC…BC_, XTSC…D motor controllers
- Adjustment dial for setting motor FLA
- Short circuit trip at 14 times the maximum setting of the FLA adjustment dial
- UL 508 Type F CMC High Fault Short Circuit Ratings: Refer to Manual Motor Protectors in **CA08102001E**.
- Nonmetallic and metallic enclosures in Types 1 (IP23), 4 (IP66), 4X (IP66) and 12 (IP65)
- Opaque (standard) or clear covers available on nonmetallic Halyester enclosure

Short Circuit Ratings

- 0 – 12A/B-frame MMP with B-frame contactor
  - 50K AIC @ 600V
- 13 – 32A/B-frame MMP with C-frame contactor
  - 18K AIC @ 600V

Standards and Certifications

Note: See Enclosed Control Product Guide PG03300001E for additional information on Standards and Certifications that apply to all Cutler-Hammer Enclosed Control products.

- UL Listed
- cUL Listed (indicates appropriate CSA Standard investigation)

Catalog Number Selection

Table 34-237. Combination Motor Controllers — Enclosed Control Catalog Numbering System

E C X 7 6 D 4 B A A -

Design
X = ***XT*** IEC

Class	Table
76 = Combination Motor Controller (CMC) — Non-reversing Starter	**34-241**
77 = Combination Motor Controller (CMC) — Non-reversing Starter with CPT	**34-242**
78 = Combination Motor Controller (CMC) — Reversing Starter	**34-243**

Frame Size
D = 12A
H = 32A

Enclosure Type/IP Ratings ①
1 = Type 1 — General Purpose
3 = Type 4 — Painted Steel
4 = Type 4X — Watertight (304-Grade SS)
5 = Type 4X — Watertight Nonmetallic
8 = Type 12 — Dust-Tight

Coil Voltage
A = 120V
B = 240V
C = 480V
D = 600V
E = 208V
L = 380V/50 Hz

Cover Control
See **Table 34-239**

Disconnect Ratings
A = None

MMP Overload Range
See **Table 34-238**

Modification Codes
See **PG03300001E**

① See **PG03300001E** for Enclosure Type/IP Rating Cross-Reference.

Table 34-238. XTPR MMP Amperage Ranges

XT **MMP Catalog Number**	**Overload Amp Range**	**Enclosed Control Suffix Code**
Frame B Rotary MMP		
XTPRP16BC1	.1 – .16	**A**
XTPRP25BC1	.16 – .25	**B**
XTPRP40BC1	.25 – .4	**C**
XTPRP63BC1	.4 – .63	**D**
XTPR001BC1	.63 – 1	**E**
XTPR1P6BC1	1 – 1.6	**F**
XTPR2P5BC1	1.6 – 2.5	**G**
XTPR004BC1	2.5 – 4	**H**
XTPR6P3BC1	4 – 6.3	**J**
XTPR010BC1	6.3 – 10	**K**
XTPR012BC1	8 – 12.0	**L**
XTPR016BC1	10 – 16.0	**M**
XTPR020BC1	16 – 20	**N**
XTPR025BC1	20 – 25	**Q**
XTPR032BC1	25 – 32	**R**

Cover Control

- Cover control for Combination Motor Control Starters uses the 10250T (30 mm) family.
- E22 style cover control is an available option.
- Selector switches are maintained with lever operators.
- Pushbuttons are momentary type with extended pushbutton.
- The kit includes hardware and connecting wires (where possible).
- For factory installed control devices other than shown below, refer to Modification Codes, **PG03300001E**.

Table 34-239. 10250T Style Combination Cover Control

Description	Factory Installed Flange Control	Field Installation Kits	
	Position 9 Alpha	Combination	
		Catalog Number	Price U.S. $
Non-reversing			
No Cover Mounted Pilot Devices	**A**	—	
START/STOP Pushbuttons	**B**	**C400T1**	
with Red RUN Pilot Light	**C**	—	
with Red RUN/Green OFF Lights	**D**	—	
ON/OFF Pushbuttons	**E**	**C400T2**	
with Red RUN Pilot Light	**F**	—	
with Red RUN/Green OFF Lights	**G**	—	
HAND/OFF/AUTO Selector Switch	**H**	**C400T12**	
with Red RUN Pilot Light	**J**	—	
with Red RUN/Green OFF Lights	**K**	—	
START Pushbutton	**L**	**C400T3**	
ON Pushbutton	**M**	**C400T4**	
OFF Pushbutton	**N**	**C400T5**	
Red RUN Pilot Light	**P**	**C400T9** ①	
Green OFF	**Q**	**C400T10** ①	
Red RUN/Green OFF Pilot Lights	**R**	**C400T11** ①	
START/STOP Selector Switch	**S**	**C400T13**	
with Red RUN Pilot Light	**T**	—	
with Red RUN/Green OFF Lights	**U**	—	
ON/OFF Selector Switch	**V**	**C400T14**	
with Red RUN Pilot Light	**W**	—	
with Red RUN/Green OFF Lights	**X**	—	
Reversing			
No Cover Mounted Pilot Devices	**A**	—	
FOR/REV/STOP Pushbuttons	**B**	**C400T6**	
with 2 Red Pilot Lights	**C**	—	
with 2 Red/1 Green Pilot Lights	**D**	—	
UP/STOP/DOWN Pushbuttons	**E**	—	
with 2 Red Pilot Lights	**F**	—	
FOR/OFF/REV Selector Switch	**H**	**C400T15**	
with 2 Red Pilot Lights	**J**	—	
with 2 Red/1 Green Pilot Lights	**K**	—	
Two Red Pilot Lights	**P**	②	
One Green Pilot Light	**Q**	**C400T10** ①	
Two Red/One Green Pilot Lights	**R**	—	
OPEN/OFF/CLOSE Selector Switch	**V**	**C400T16**	
with 2 Red Pilot Lights	**W**	—	
with 2 Red/1 Green Pilot Lights	**X**	—	

① Add Code Letter from the table below to Catalog Number for voltage — Kits only. Example: C400T9**B**.

Rating	Code Letter	Rating	Code Letter	Rating	Code Letter
120V 60 Hz	**A**	240V 60 Hz	**B**	480V 60 Hz	**C**
208V 60 Hz	**E**	380V 50 Hz	**L**	600V 60 Hz	**D**

② Order Quantity (2) of **C400T10.**

Discount Symbol **1CD1C**

Table 34-240. E22 Style Combination Motor Controller Cover Control

Description	Factory Installed ①	Field Kits	
	Position 9 Cover Control Code	Combination Only	
		Catalog Number	Price U.S. $
Non-reversing			
START/STOP Pushbuttons (PB)	**B**	**CE400T01**	
START/STOP PB & Red RUN Light	**C**	**CE400T02** ②	
START/STOP PB, Red RUN, & Green STOPPED Light	**D**	**CE400T03** ②	
HAND/OFF/AUTO Selector Switch (SS)	**H**	**CE400T04**	
H-O-A SS & Red RUN Light	**J**	**CE400T05** ②	
H-O-A SS, Red RUN, & Green STOPPED Light	**K**	**CE400T06** ②	
Red RUN Pilot Light	**P**	**CE400T10** ②	
Green Off Pilot Light	**Q**	**CE400T11** ②	
Red RUN/Green OFF Pilot Light	**R**	**CE400T12** ②	
ON/OFF Selector Switch (SS)	**S**	**CE400T07**	
ON/OFF SS, Red RUN Light	**T**	**CE400T08** ②	
ON/OFF SS, Red RUN, & Green STOPPED Light	**U**	**CE400T09** ②	
Reversing			
FWD/REV/STOP Pushbuttons (PB)	**B**	**CE400T50**	
FWD/REV/STOP PB + Red FWD & REV Lights	**C**	**CE400T51** ②	
FWD/REV/STOP PB, Red FWD/REV, & Green STOPPED	**D**	**CE400T52** ②	
FOR/OFF/REV Selector Switch (SS)	**H**	**CE400T53**	
FOR/OFF/REV SS + Red FWD & REV Lights	**J**	**CE400T54** ②	
FOR/OFF/REV SS, Red FWD/REV, & Green STOPPED	**K**	**CE400T55** ②	
OPEN/OFF/CLOSE Selector Switch (SS)	**V**	**CE400T56**	
OPEN/OFF/CLOSE SS + Red FWD & REV Lights	**W**	**CE400T57** ②	
OPEN/OFF/CLOSE SS, Red FWD/REV, & Green STOPPED	**X**	**CE400T58** ②	

① To include any of the above cover controls, place the control code character in position 9 of your Catalog Number and add Mod Code **P74**. Example: ECX77H1A**D**A-**P74**. Full voltage non-reversing fusible starter with interchangeable heater OLR and START/STOP pushbutton with red RUN and green OFF pilot lights.

② Suffix for lights (required for field installed kits only) in the table below:

Rating	Catalog Suffix	Rating	Catalog Suffix
120V 60 Hz	**A**	277V 60 Hz	**H**
208V 60 Hz	**E**	380V 50 Hz	**L**
240V 60 Hz	**B**	460V 60 Hz	**C**
		600V 60 Hz	**D**

Note: All CMC design built in enclosure Size 5 do not contain a CPT. In order to supply internal power for cover control, the enclosure must increase to Size 6. If control power is to be supplied from a source outside of the enclosure, there is no need to oversize. Note that 32A and less FVNR designs permit room for a 24V DC power supply to be installed.

Discount Symbol **1CD1C**

Product Selection

Table 34-241. Class ECX76 — Combination Motor Controller (CMC) — Non-reversing Starter

Size	Amps	Maximum hp ①			Coil voltage @ 60 Hz ②	Type 1/IP23 General Purpose		Type 4X/IP66 ④⑤ Watertight		Component ③
		Motor Voltage	1-phase	3-phase		Catalog Number	Price U.S. $	Catalog Number	Price U.S. $	Catalog Number
D	12	115	1/2	—	120	**ECX76D1AAA-_**		**ECX76D4AAA-_**		**XTPR_ _ _BC1**
		208	1-1/2	3	208	**ECX76D1EAA-_**		**ECX76D4EAA-_**		
		230	2	3	240	**ECX76D1BAA-_**		**ECX76D4BAA-_**		
		380	—	5	380/50 Hz	**ECX76D1LAA-_**		**ECX76D4LAA-_**		
		460	—	7-1/2	480	**ECX76D1CAA-_**		**ECX76D4CAA-_**		
		575	—	10	600	**ECX76D1DAA-_**		**ECX76D4DAA-_**		
H	32	115	3	—	120	**ECX76H1AAA-_**		**ECX76H4AAA-_**		**XTPR_ _ _BC1**
		208	5	10	208	**ECX76H1EAA-_**		**ECX76H4EAA-_**		
		230	5	10	240	**ECX76H1BAA-_**		**ECX76H4BAA-_**		
		380	—	15	380/50 Hz	**ECX76H1LAA-_**		**ECX76H4LAA-_**		
		460	—	20	480	**ECX76H1CAA-_**		**ECX76H4CAA-_**		
		575	—	25	600	**ECX76H1DAA-_**		**ECX76H4DAA-_**		

① 1 hp = 0.746 kW.
② Voltage is listed @ 60 Hz unless otherwise noted. Other voltages available upon request.
③ Select proper "XTPR" MMP Overload Amperage range as per motor FLA, see **Page 34-203**.
④ These are the Catalog Numbers for Type 4X 304-Grade Stainless Steel, as indicated by the seventh digit **4**. Example: ECX76D**4**AAA-_. To order Type 4 Painted Steel, change that digit to **3**.
⑤ Handle mechanism is rated Type 1 or 12. Contact local sales office for availability of Type 4X versions.

Table 34-241. Class ECX76 — Combination Motor Controller (CMC) — Non-reversing Starter (Continued)

Size	Amps	Maximum hp ⑥			Coil voltage @ 60 Hz ⑦	Type 4X Nonmetallic/IP66 ⑨ Watertight		Type 12/IP65 Dust-Tight		Component ⑧
		Motor Voltage	1-phase	3-phase		Catalog Number	Price U.S. $	Catalog Number	Price U.S. $	Catalog Number
D	12	115	1/2	—	120	**ECX76D5AAA-_**		**ECX76D8AAA-_**		**XTPR_ _ _BC1**
		208	1-1/2	3	208	**ECX76D5EAA-_**		**ECX76D8EAA-_**		
		230	2	3	240	**ECX76D5BAA-_**		**ECX76D8BAA-_**		
		380	—	5	380/50 Hz	**ECX76D5LAA-_**		**ECX76D8LAA-_**		
		460	—	7-1/2	480	**ECX76D5CAA-_**		**ECX76D8CAA-_**		
		575	—	10	600	**ECX76D5DAA-_**		**ECX76D8DAA-_**		
H	32	115	3	—	120	**ECX76H5AAA-_**		**ECX76H8AAA-_**		**XTPR_ _ _BC1**
		208	5	10	208	**ECX76H5EAA-_**		**ECX76H8EAA-_**		
		230	5	10	240	**ECX76H5BAA-_**		**ECX76H8BAA-_**		
		380	—	15	380/50 Hz	**ECX76H5LAA-_**		**ECX76H8LAA-_**		
		460	—	20	480	**ECX76H5CAA-_**		**ECX76H8CAA-_**		
		575	—	25	600	**ECX76H5DAA-_**		**ECX76H8DAA-_**		

⑥ 1 hp = 0.746 kW.
⑦ Voltage is listed @ 60 Hz unless otherwise noted. Other voltages available upon request.
⑧ Select proper "XTPR" MMP Overload Amperage range as per motor FLA, see **Page 34-203**.
⑨ Handle mechanism is rated Type 1 or 12. Contact local sales office for availability of Type 4X versions.

Cover Control ..... **Page 34-204**
Dimensions **PG03300001E**
Modifications Codes **PG03300001E**
Technical Data, MMPs **CA08102001E**
Technical Data, Contactors **PG03300001E**
Discount Symbol **1CD1C**

Table 34-242. Class ECX77 — Combination Motor Controller (CMC) — Non-reversing Starter with CPT

Size	Amps	Maximum hp ①			Coil voltage @ 60 Hz ②	Type 1/IP23 General Purpose		Type 4X/IP66 ④⑤ Watertight		Component ③
		Motor Voltage	1-phase	3-phase		Catalog Number	Price U.S. $	Catalog Number	Price U.S. $	Catalog Number
D	12	115	1/2	—	120	**ECX77D1AAA-_**		**ECX77D4AAA-_**		**XTPR_ _ _BC1**
		208	1-1/2	3	208	**ECX77D1EAA-_**		**ECX77D4EAA-_**		
		230	2	3	240	**ECX77D1BAA-_**		**ECX77D4BAA-_**		
		380	—	5	380/50 Hz	**ECX77D1LAA-_**		**ECX77D4LAA-_**		
		460	—	7-1/2	480	**ECX77D1CAA-_**		**ECX77D4CAA-_**		
		575	—	10	600	**ECX77D1DAA-_**		**ECX77D4DAA-_**		
H	32	115	3	—	120	**ECX77H1AAA-_**		**ECX77H4AAA-_**		**XTPR_ _ _BC1**
		208	5	10	208	**ECX77H1EAA-_**		**ECX77H4EAA-_**		
		230	5	10	240	**ECX77H1BAA-_**		**ECX77H4BAA-_**		
		380	—	15	380/50 Hz	**ECX77H1LAA-_**		**ECX77H4LAA-_**		
		460	—	20	480	**ECX77H1CAA-_**		**ECX77H4CAA-_**		
		575	—	25	600	**ECX77H1DAA-_**		**ECX77H4DAA-_**		

① 1 hp = 0.746 kW.
② Voltage is listed @ 60 Hz unless otherwise noted. Other voltages available upon request.
③ Select proper "XTPR" MMP Overload Amperage range as per motor FLA, see **Page 34-203**.
④ These are the Catalog Numbers for Type 4X 304-Grade Stainless Steel, as indicated by the seventh digit **4**. Example: ECX77D**4**AAA-_. To order Type 4 Painted Steel, change that digit to **3**.
⑤ Handle mechanism is rated Type 1 or 12. Contact local sales office for availability of Type 4X versions.

Table 34-242. Class ECX77 — Combination Motor Controller (CMC) — Non-reversing Starter with CPT (Continued)

Size	Amps	Maximum hp ⑥			Coil voltage @ 60 Hz ⑦	Type 4X Nonmetallic/ IP66 ⑨ Watertight		Type 12/IP65 Dust-Tight		Component ⑧
		Motor Voltage	1-phase	3-phase		Catalog Number	Price U.S. $	Catalog Number	Price U.S. $	Catalog Number
D	12	115	1/2	—	120	**ECX77D5AAA-_**		**ECX77D8AAA-_**		**XTPR_ _ _BC1**
		208	1-1/2	3	208	**ECX77D5EAA-_**		**ECX77D8EAA-_**		
		230	2	3	240	**ECX77D5BAA-_**		**ECX77D8BAA-_**		
		380	—	5	380/50 Hz	**ECX77D5LAA-_**		**ECX77D8LAA-_**		
		460	—	7-1/2	480	**ECX77D5CAA-_**		**ECX77D8CAA-_**		
		575	—	10	600	**ECX77D5DAA-_**		**ECX77D8DAA-_**		
H	32	115	3	—	120	**ECX77H5AAA-_**		**ECX77H8AAA-_**		**XTPR_ _ _BC1**
		208	5	10	208	**ECX77H5EAA-_**		**ECX77H8EAA-_**		
		230	5	10	240	**ECX77H5BAA-_**		**ECX77H8BAA-_**		
		380	—	15	380/50 Hz	**ECX77H5LAA-_**		**ECX77H8LAA-_**		
		460	—	20	480	**ECX77H5CAA-_**		**ECX77H8CAA-_**		
		575	—	25	600	**ECX77H5DAA-_**		**ECX77H8DAA-_**		

⑥ 1 hp = 0.746 kW.
⑦ Voltage is listed @ 60 Hz unless otherwise noted. Other voltages available upon request.
⑧ Select proper "XTPR" MMP Overload Amperage range as per motor FLA, see **Page 34-203**.
⑨ Handle mechanism is rated Type 1 or 12. Contact local sales office for availability of Type 4X versions.

Cover Control ..... **Page 34-204**
Dimensions..... **PG03300001E**
Modifications Codes **PG03300001E**
Technical Data, MMPs **CA08102001E**
Technical Data, Contactors **PG03300001E**
Discount Symbol..... **1CD1C**

Table 34-243. Class ECX78 — Combination Motor Controller (CMC) — Reversing Starter

Size	Amps	Maximum hp ①			Coil voltage @ 60 Hz ②	Type 1/IP23 General Purpose		Type 4X/IP66 ④⑤ Watertight		Component ③
		Motor Voltage	1-phase	3-phase		Catalog Number	Price U.S. $	Catalog Number	Price U.S. $	Catalog Number
D	12	115	1/2	—	120	**ECX78D1AAA-_**		**ECX78D4AAA-_**		**XTPR_ _ _BC1**
		208	1-1/2	3	208	**ECX78D1EAA-_**		**ECX78D4EAA-_**		
		230	2	3	240	**ECX78D1BAA-_**		**ECX78D4BAA-_**		
		380	—	5	380/50 Hz	**ECX78D1LAA-_**		**ECX78D4LAA-_**		
		460	—	7-1/2	480	**ECX78D1CAA-_**		**ECX78D4CAA-_**		
		575	—	10	600	**ECX78D1DAA-_**		**ECX78D4DAA-_**		
H	32	115	3	—	120	**ECX78H1AAA-_**		**ECX78H4AAA-_**		**XTPR_ _ _BC1**
		208	5	10	208	**ECX78H1EAA-_**		**ECX78H4EAA-_**		
		230	5	10	240	**ECX78H1BAA-_**		**ECX78H4BAA-_**		
		380	—	15	380/50 Hz	**ECX78H1LAA-_**		**ECX78H4LAA-_**		
		460	—	20	480	**ECX78H1CAA-_**		**ECX78H4CAA-_**		
		575	—	25	600	**ECX78H1DAA-_**		**ECX78H4DAA-_**		

① 1 hp = 0.746 kW.
② Voltage is listed @ 60 Hz unless otherwise noted. Other voltages available upon request.
③ Select proper "XTPR" MMP Overload Amperage range as per motor FLA, see **Page 34-203**.
④ These are the Catalog Numbers for Type 4X 304-Grade Stainless Steel, as indicated by the seventh digit **4**. Example: ECX78D**4**AAA-_. To order Type 4 Painted Steel, change that digit to **3**.
⑤ Handle mechanism is rated Type 1 or 12. Contact local sales office for availability of Type 4X versions.

Table 34-243. Class ECX78 — Combination Motor Controller (CMC) — Reversing Starter (Continued)

Size	Amps	Maximum hp ⑥			Coil voltage @ 60 Hz ⑦	Type 4X Nonmetallic/ IP66 ⑨ Watertight		Type 12/IP65 Dust-Tight		Component ⑧
		Motor Voltage	1-phase	3-phase		Catalog Number	Price U.S. $	Catalog Number	Price U.S. $	Catalog Number
D	12	115	1/2	—	120	**ECX78D5AAA-_**		**ECX78D8AAA-_**		**XTPR_ _ _BC1**
		208	1-1/2	3	208	**ECX78D5EAA-_**		**ECX78D8EAA-_**		
		230	2	3	240	**ECX78D5BAA-_**		**ECX78D8BAA-_**		
		380	—	5	380/50 Hz	**ECX78D5LAA-_**		**ECX78D8LAA-_**		
		460	—	7-1/2	480	**ECX78D5CAA-_**		**ECX78D8CAA-_**		
		575	—	10	600	**ECX78D5DAA-_**		**ECX78D8DAA-_**		
H	32	115	3	—	120	**ECX78H5AAA-_**		**ECX78H8AAA-_**		**XTPR_ _ _BC1**
		208	5	10	208	**ECX78H5EAA-_**		**ECX78H8EAA-_**		
		230	5	10	240	**ECX78H5BAA-_**		**ECX78H8BAA-_**		
		380	—	15	380/50 Hz	**ECX78H5LAA-_**		**ECX78H8LAA-_**		
		460	—	20	480	**ECX78H5CAA-_**		**ECX78H8CAA-_**		
		575	—	25	600	**ECX78H5DAA-_**		**ECX78H8DAA-_**		

⑥ 1 hp = 0.746 kW.
⑦ Voltage is listed @ 60 Hz unless otherwise noted. Other voltages available upon request.
⑧ Select proper "XTPR" MMP Overload Amperage range as per motor FLA, see **Page 34-203**.
⑨ Handle mechanism is rated Type 1 or 12. Contact local sales office for availability of Type 4X versions.

Cover Control . . . . . **Page 34-204**
Dimensions **PG03300001E**
Modifications Codes **PG03300001E**
Technical Data, MMPs **CA08102001E**
Technical Data, Contactors **PG03300001E**
Discount Symbol **1CD1C**

Dimensions

Type 1, 3R, 4, 4X, 12 *XT* HMCP Combination Starters

Table 34-244. Class 25 — FVNR Combination with HMCP

IEC Size (Frame / Amps)	Box Number	Ship Weight in kg [Lb]
B – H / 7 – 32A B – H / 7 – 32A	**7A** **7P**	10 [23] 8.2 [18]
J – L / 40 – 65A J – L / 40 – 65A	**7A** **7P**	11 [24] 8.9 [20]
M – Q / 80 – 125A	**8**	31.8 [70]

Table 34-245. Class 26 — FVR Combination with HMCP

IEC Size (Frame / Amps)	Box Number	Ship Weight in kg [Lb]
B – H / 7 – 32A B – H / 7 – 32A	**7A** **7P**	12 [26] 10 [22]
J – L / 40 – 65A J – L / 40 – 65A	**7A** **7P**	13 [29] 11 [25]
M – P / 80 – 115A	**8**	31.8 [70]

Type 1, 3R, 4, 4X, 12 *XT* Combination Motor Controllers (CMCs)

Table 34-246. Class 76 — Self Protected Starter (CMC)

IEC Size (Frame/Amps)	Box Number	Ship Weight kg [lbs]
B – H/up to 32A	K	6.8 [15]
B – H/up to 32A	5P	5.4 [12]

Table 34-247. Class 77 — Self Protected Starter (CMC) with CPT

IEC Size (Frame/Amps)	Box Number	Ship Weight kg [lbs]
B – H/up to 32A	K	9.5 [21]
B – H/up to 32A	6P	7.0 [17]

Table 34-248. Class 78 — Reversing Self Protected Starter (CMC)

IEC Size (Frame/Amps)	Box Number	Ship Weight kg [lbs]
B – H/7 – 32A	K	7.0 [16]
B – H/7 – 32A	5P	5.2 [12]

Box Dimensions

For Box Dimensions, See *Enclosed Control Product Guide*, PG03300001E.

Type 2 Coordination

What is it?

The International Electrotechnical Commission (IEC) developed short circuit performance criteria for contactors and starters called Type 1 coordination and Type 2 coordination. This defines motor controller protection levels following a short circuit fault. In order to achieve this performance, the combination of a motor controller (contactor or starter) and short circuit protective device (manual motor protector, circuit breaker or fuse) must meet the following criteria as specified by IEC 60947-4-1 — Low voltage switchgear and controlgear — Part 4-1: Contactors and motor-starters — Electromechanical contactors and motor-starters:

Type 1 Coordination requires that under short circuit conditions, the contactor or starter shall cause no danger to persons or installation and may not be suitable for further service without repair and replacement of parts.

In this case, *significant damage is allowed* to the contactor/starter (e.g. contact welding, burning, or disintegration) and the overload relay (e.g. component harm or heater element burn-out).

Type 2 Coordination requires that under short circuit conditions, the contactor or starter shall cause no danger to persons or installation and shall be suitable for further use. The risk of contact welding is recognized, in which case the manufacturer shall indicate the measures to be taken as regards to the maintenance of the equipment.

In this case, the contactor/starter is *able to continue use* after the occurrence of a short circuit fault. Light contact burning or tack welding may occur provided the contacts are easily separable.

Table 34-249. 400, 415V Type 2 Coordination — MMC

P (kW)	I_e (A)	I_q (kA)	MMP Catalog Number	Contactor Catalog Number ②	MMC Catalog Number ②
0.06	0.21	50 (150) ①	XTPRP25BC1	XTCE007B10_	XTSCP25BB_
0.09	0.31	50 (150) ①	XTPRP40BC1	XTCE007B10_	XTSCP40BB_
0.12	0.41	50 (150) ①	XTPRP63BC1	XTCE007B10_	XTSCP63BB_
0.18	0.60	50 (150) ①	XTPRP63BC1	XTCE007B10_	XTSCP63BB_
0.25	0.80	50 (150) ①	XTPR001BC1	XTCE007B10_	XTSC001BB_
0.37	1.10	50 (150) ①	XTPR1P6BC1	XTCE007B10_	XTSC1P6BB_
0.55	1.50	50 (150) ①	XTPR1P6BC1	XTCE007B10_	XTSC1P6BB_
0.75	1.90	50 (150) ①	XTPR2P5BC1	XTCE007B10_	XTSC2P5BB_
1.10	2.60	50 (150) ①	XTPR004BC1	XTCE007B10_	XTSC004BB_
1.50	3.60	50 (150) ①	XTPR004BC1	XTCE007B10_	XTSC004BB_
2.20	5.00	50 (150) ①	XTPR6P3BC1	XTCE007B10_	XTSC6P3BB_
3.00	6.60	50 (150) ①	XTPR010BC1	XTCE018C10_	XTSC010BC_
4.00	8.50	50 (150) ①	XTPR010BC1	XTCE018C10_	XTSC010BC_
5.50	11.3	50	XTPR012BC1	XTCE018C10_	XTSC012BC_
7.50	16.0	50	XTPR016BC1	XTCE018C10_	XTSC016BC_
11.0	21.7	50	XTPR025BC1	XTCE025C10_	XTSC025BC_
15.0	29.3	50	XTPR032BC1	XTCE032C10_	XTSC032BC_
5.50	11.3	50	XTPR016DC1	XTCE018C10_	XTSC016DC_
7.50	16.0	50	XTPR016DC1	XTCE018C10_	XTSC016DC_
11.0	21.7	50	XTPR025DC1	XTCE025C10_	XTSC025DC_
15.0	29.3	50	XTPR032DC1	XTCE032C10_	XTSC032DC_
18.5	36.0	50	XTPR040DC1	XTCE040D00_	XTSC040DD_
22.0	41.0	50	XTPR050DC1	XTCE050D00_	XTSC050DD_
30.0	55.0	50	XTPR058DC1	XTCE065D00_	XTSC058DD_
34.0	63.0	50	XTPR063DC1	XTCE065D00_	XTSC063DD_

① Values in parentheses ( ) are for Type 1 Coordination.
② Underscore (_) indicates magnet coil suffix required. See **Table 34-261**, **Page 34-216**.

Note: See **Page 34-216** for more information on Wye-Delta (Star Delta) applications.

Table 34-250. 480V Type 2 Coordination — MMC

P (hp)	I_e (A)	I_q (kA)	MMP Catalog Number	Current Limiter Catalog Number	Contactor Catalog Number ②	MMC Catalog Number ②
1/2	0.24	65	XTPRP25BC1		XTCE007B10_	XTSCP25BB_
1/2	0.32	65	XTPRP40BC1		XTCE007B10_	XTSCP40BB_
1/2	0.51	65	XTPRP63BC1		XTCE007B10_	XTSCP63BB_
1/2	0.74	65	XTPR001BC1		XTCE007B10_	XTSC001BB_
1/2	0.94	65	XTPR001BC1		XTCE007B10_	XTSC001BB_
3/4	1.32	65	XTPR1P6BC1		XTCE007B10_	XTSC1P6BB_
1	1.72	65	XTPR2P5BC1		XTCE018C10_	XTSC2P5BC_
2	2.55	65	XTPR004BC1		XTCE018C10_	XTSC004BC_
2	3.10	65	XTPR004BC1		XTCE018C10_	XTSC004BC_
3	4.55	65 (50) ①	XTPR6P3BC1	XTPAXCL	XTCE018C10_	XTSC6P3BC_
3	6.15	65 (50) ①	XTPR6P3BC1	XTPAXCL	XTCE018C10_	XTSC6P3BC_
7-1/2	8.40	65 (50) ①	XTPR010BC1	XTPAXCL	XTCE018C10_	XTSC010BC_
7-1/2	11.0	65 (50) ①	XTPR012BC1	XTPAXCL	XTCE018C10_	XTSC012BC_
10	14.5	65 (50) ①	XTPR016BC1	XTPAXCL	XTCE018C10_	XTSC016BC_
10	20.0	65 (50) ①	XTPR020BC1	XTPAXCL	XTCE025C10_	XTSC020BC_
20	20.0	65	XTPR025DC1		XTCE040D00_	XTSC025DD_
25	27.0	65	XTPR032DC1		XTCE040D00_	XTSC032DD_
25	32.0	65	XTPR032DC1		XTCE040D00_	XTSC032DD_
30	37.5	65	XTPR040DC1		XTCE040D00_	XTSC040DD_
40	40.5	65	XTPR050DC1		XTCE050D00_	XTSC050DD_
40	50.5	65	XTPR058DC1		XTCE065D00_	XTSC058DD_
40	64.0	65	XTPR063DC1		XTCE065D00_	XTSC063DD_

① Values in parentheses ( ) are achieved without the current limiter.
② Underscore (_) indicates magnet coil suffix required. See **Table 34-261**, **Page 34-216**.

Note: See **Page 34-216** for more information on Wye-Delta (Star Delta) applications.

Table 34-251. 600V Type 2 Coordination — MMC

P (hp)	I_e (A)	I_q (kA)	MMP Catalog Number	Current Limiter Catalog Number	Contactor Catalog Number ④	MMC Catalog Number ④
1/2	0.19	50	XTPRP25BC1		XTCE007B10_	XTSCP25BB_
1/2	0.26	50	XTPRP40BC1		XTCE007B10_	XTSCP40BB_
1/2	0.41	50	XTPRP63BC1		XTCE007B10_	XTSCP63BB_
1/2	0.59	50	XTPRP63BC1		XTCE007B10_	XTSCP63BB_
1/2	0.75	50	XTPR001BC1		XTCE007B10_	XTSC001BB_
1	1.06	50	XTPR1P6BC1		XTCE007B10_	XTSC1P6BB_
1	1.38	50	XTPR1P6BC1		XTCE007B10_	XTSC1P6BB_
1-1/2	2.04	50	XTPR2P5BC1		XTCE018C10_	XTSC2P5BC_
1-1/2	2.48	50	XTPR2P5BC1		XTCE018C10_	XTSC2P5BC_
3	3.64	50	XTPR004BC1		XTCE018C10_	XTSC004BC_
5	4.92	50 (18) ③	XTPR6P3BC1	XTPAXCL	XTCE018C10_	XTSC6P3BC_
10	6.72	50 (18) ③	XTPR010BC1	XTPAXCL	XTCE018C10_	XTSC010BC_
10	8.60	50 (18) ③	XTPR010BC1	XTPAXCL	XTCE018C10_	XTSC010BC_
10	11.5	50 (18) ③	XTPR012BC1	XTPAXCL	XTCE018C10_	XTSC012BC_
10	16.0	50 (18) ③	XTPR016BC1	XTPAXCL	XTCE018C10_	XTSC016BC_
25	21.5	50	XTPR025DC1		XTCE040D00_	XTSC025DD_
30	25.5	50	XTPR032DC1		XTCE040D00_	XTSC032DD_
30	30.0	50	XTPR032DC1		XTCE040D00_	XTSC032DD_
30	37.5	50	XTPR040DC1		XTCE040D00_	XTSC050DD_
40	40.5	50	XTPR050DC1		XTCE050D00_	XTSC050DD_
40	51.0	42	XTPR058DC1		XTCE065D00_	XTSC058DD_
50	61.0	42	XTPR063DC1		XTCE065D00_	XTSC063DD_

③ Values in parentheses ( ) are achieved without the current limiter.
④ Underscore (_) indicates magnet coil suffix required. See **Table 34-261**, **Page 34-216**.

Note: See **Page 34-216** for more information on Wye-Delta (Star Delta) applications.

Table 34-252. 400, 415V Type 2 Coordination — Contactor and Overload Relay (Motor Starter) with Fused Disconnect

P (kW)	I_e (A)	I_q (kA)	Fuses Class gG/gL	Contactor Catalog Number ①	Overload Relay Catalog Number	Assembled Starter Catalog Number ①
0.12	0.41	100	2	XTCE007B10_	XTOBP60BC1	XTAE007B10_P60
0.18	0.60	100	2	XTCE007B10_	XTOB001BC1	XTAE007B10_001
0.25	0.80	100	4	XTCE007B10_	XTOB001BC1	XTAE007B10_001
0.37	1.10	100	4	XTCE007B10_	XTOB1P6BC1	XTAE007B10_1P6
0.55	1.50	100	4	XTCE007B10_	XTOB1P6BC1	XTAE007B10_1P6
0.75	1.90	100	6	XTCE007B10_	XTOB2P4BC1	XTAE007B10_2P4
1.10	2.60	100	6	XTCE007B10_	XTOB004BC1	XTAE007B10_004
1.50	3.60	100	6	XTCE007B10_	XTOB004BC1	XTAE007B10_004
2.20	5.00	100	10	XTCE007B10_	XTOB006BC1	XTAE007B10_006
3.00	6.60	100	16	XTCE007B10_	XTOB010BC1	XTAE007B10_010
4.00	8.50	100	20	XTCE009B10_	XTOB010BC1	XTAE009B10_010
5.50	11.3	100	25	XTCE018C10_	XTOB016CC1	XTAE018C10_016
7.50	16.0	100	32	XTCE018C10_	XTOB016CC1	XTAE018C10_016
11.0	21.7	100	40	XTCE025C10_	XTOB024CC1	XTAE032C10_024
15.0	29.3	100	63	XTCE032C10_	XTOB032CC1	XTAE032C10_032
18.5	36.0	100	63	XTCE040D00_	XTOB040DC1	XTAE040D00_040
22.0	41.0	100	80	XTCE050D00_	XTOB057DC1	XTAE065D00_057
30.0	55.0	100	100	XTCE065D00_	XTOB057DC1	XTAE065D00_057
37.0	68.0	100	125	XTCE080F00_	XTOB070GC1	XTAE080F00_070
45.0	81.0	100	160	XTCE095F00_	XTOB100GC1	XTAE095F00_100
55.0	99.0	100	200	XTCE115G00_	XTOB100GC1	XTAE115G00_100
75.0	134.	100	200	XTCE150G00_	XTOB150GC1	XTAE150G00_150
90.0	161.	100	250	XTCE185L22_	XTOB220LC1	XTAE185L22_220
110.	196.	100	315	XTCE225L22_	XTOB220LC1	XTAE225L22_220
132.	231.	100	400	XTCE250L22_	XTOB250LC1	XTAE250L22_250
160.	279.	100	400	XTCE300M22_	XTOT290C35	XTAE300M22_290
200.	349.	100	500	XTCE400M22_	XTOT400C35	XTAE400M22_400
250.	437.	100	630	XTCE500M22_	XTOT540C35	XTAE500M22_540

① Underscore (_) indicates magnet coil code required. See **Table 34-261**, **Page 34-216**.

Note: See **Page 34-216** for more information on Wye-Delta (Star Delta) applications.

Table 34-253. 500V Type 2 Coordination — Contactor and Overload Relay (Motor Starter) with Fused Disconnect

P (kW)	I_e (A)	I_q (kA)	Fuses Class gG/gL	Contactor Catalog Number ②	Overload Relay Catalog Number	Assembled Starter Catalog Number ②
0.12	0.33	100	2	XTCE007B10_	XTOBP40BC1	XTAE007B10_P40
0.18	0.48	100	2	XTCE007B10_	XTOBP60BC1	XTAE007B10_P60
0.25	0.70	100	2	XTCE007B10_	XTOB001BC1	XTAE007B10_001
0.37	0.90	100	2	XTCE007B10_	XTOB001BC1	XTAE007B10_001
0.55	1.20	100	4	XTCE007B10_	XTOB1P6BC1	XTAE007B10_1P6
0.75	1.50	100	4	XTCE007B10_	XTOB1P6BC1	XTAE007B10_1P6
1.10	2.10	100	6	XTCE007B10_	XTOB2P4BC1	XTAE007B10_2P4
1.50	2.90	100	6	XTCE007B10_	XTOB004BC1	XTAE007B10_004
2.20	4.00	100	10	XTCE007B10_	XTOB006BC1	XTAE007B10_006
3.00	5.30	100	16	XTCE009B10_	XTOB006BC1	XTAE009B10_006
4.00	6.80	100	16	XTCE009B10_	XTOB010BC1	XTAE009B10_010
5.50	9.00	100	20	XTCE012B10_	XTOB010BC1	XTAE012B10_010
7.50	12.1	100	25	XTCE018C10_	XTOB016CC1	XTAE018C10_016
11.0	17.4	100	32	XTCE025C10_	XTOB024CC1	XTAE025C10_024
15.0	23.4	100	50	XTCE040D00_	XTOB024DC1	XTAE040D00_024
18.5	28.9	100	50	XTCE040D00_	XTOB040DC1	XTAE040D00_040
22.0	33.0	100	63	XTCE050D00_	XTOB040DC1	XTAE050D00_040
30.0	44.0	100	80	XTCE065D00_	XTOB057DC1	XTAE065D00_057
37.0	54.0	100	100	XTCE080F00_	XTOB070GC1	XTAE080F00_070
45.0	65.0	100	125	XTCE095F00_	XTOB070GC1	XTAE095F00_070
55.0	79.0	100	160	XTCE115G00_	XTOB100GC1	XTAE115G00_100
75.0	107.	100	200	XTCE185L22_	XTOB125LC1	XTAE185L22_125
90.0	129.	100	200	XTCE185L22_	XTOB125LC1	XTAE185L22_125
110.	157.	100	250	XTCE185L22_	XTOB160LC1	XTAE185L22_160
132.	184.	100	250	XTCE185L22_	XTOB220LC1	XTAE185L22_220
160.	224.	100	315	XTCE225L22_	XTOB250LC1	XTAE225L22_250

② Underscore (_) indicates magnet coil code required. See **Table 34-261**, **Page 34-216**.

Note: See **Page 34-216** for more information on Wye-Delta (Star Delta) applications.

Table 34-254. 690V Type 2 Coordination — Contactor and Overload Relay (Motor Starter) with Fused Disconnect

P (kW)	I_e (A)	I_q (kA)	Fuses Class gG/gL	Contactor Catalog Number ①	Overload Relay Catalog Number	Assembled Starter Catalog Number ①
0.12	0.24	100	1	XTCE007B10_	XTOBP40BC1	XTAE007B10_P40
0.18	0.35	100	2	XTCE007B10_	XTOBP40BC1	XTAE007B10_P40
0.25	0.50	100	2	XTCE007B10_	XTOBP60BC1	XTAE007B10_P60
0.37	0.70	100	2	XTCE007B10_	XTOB001BC1	XTAE007B10_001
0.55	0.90	100	4	XTCE007B10_	XTOB001BC1	XTAE007B10_001
0.75	1.10	100	4	XTCE007B10_	XTOB1P6BC1	XTAE007B10_1P6
1.10	1.50	100	4	XTCE007B10_	XTOB1P6BC1	XTAE007B10_1P6
1.50	2.10	100	6	XTCE007B10_	XTOB2P4BC1	XTAE007B10_2P4
2.20	2.90	100	10	XTCE007B10_	XTOB004BC1	XTAE007B10_004
3.00	3.80	100	10	XTCE007B10_	XTOB004BC1	XTAE007B10_004
4.00	4.90	100	16	XTCE009B10_	XTOB006BC1	XTAE009B10_006
5.50	6.50	100	16	XTCE012B10_	XTOB010BC1	XTAE012B10_010
7.50	8.80	100	20	XTCE018C10_	XTOB010CC1	XTAE018C10_010
11.0	12.6	100	25	XTCE025C10_	XTOB016CC1	XTAE025C10_016
15.0	17.0	100	32	XTCE032C10_	XTOB024CC1	XTAE032C10_024
18.5	20.9	100	32	XTCE040D00_	XTOB024DC1	XTAE040D00_024
22.0	23.8	100	50	XTCE040D00_	XTOB040DC1	XTAE040D00_040
30.0	32.0	100	63	XTCE065D00_	XTOB040DC1	XTAE065D00_040
37.0	39.0	100	80	XTCE080F00_	XTOB050GC1	XTAE080F00_050
45.0	47.0	100	80	XTCE080F00_	XTOB050GC1	XTAE080F00_050
55.0	58.0	100	100	XTCE080F00_	XTOB070GC1	XTAE080F00_070
75.0	78.0	100	160	XTCE095F00_	XTOB100GC1	XTAE095F00_100
90.0	93.0	100	160	XTCE115G00_	XTOB100GC1	XTAE115G00_100
110.	114.	100	200	XTCE185L22_	XTOB125LC1	XTAE185L22_125
132.	134.	100	250	XTCE185L22_	XTOB160LC1	XTAE185L22_160
160.	162.	100	250	XTCE185L22_	XTOB220LC1	XTAE185L22_220

① Underscore (_) indicates magnet coil code required. See **Table 34-261**, **Page 34-216**.

Note: See **Page 34-216** for more information on Wye-Delta (Star Delta) applications.

Table 34-255. 400, 415V Type 2 Coordination — Contactor and Overload Relay (Motor Starter) with Fused Disconnect

P (kW)	I_e (A)	I_q (kA)	Fuses ② Class BS88	Contactor Catalog Number ③	Overload Relay Catalog Number	Assembled Starter Catalog Number ③
0.12	0.41	80	4	XTCE007B10_	XTOBP60BC1	XTAE007B10_P60
0.18	0.60	80	4	XTCE007B10_	XTOBP60BC1	XTAE007B10_P60
0.25	0.80	80	4	XTCE007B10_	XTOB001BC1	XTAE007B10_001
0.37	1.10	80	6	XTCE007B10_	XTOB1P6BC1	XTAE007B10_1P6
0.55	1.50	80	10	XTCE007B10_	XTOB1P6BC1	XTAE007B10_1P6
0.75	1.90	80	16	XTCE007B10_	XTOB2P4BC1	XTAE007B10_2P4
1.10	2.60	80	16	XTCE007B10_	XTOB004BC1	XTAE007B10_004
1.50	3.60	80	20	XTCE007B10_	XTOB004BC1	XTAE007B10_004
2.20	5.00	80	20	XTCE007B10_	XTOB006BC1	XTAE007B10_006
3.00	6.60	80	20	XTCE007B10_	XTOB010BC1	XTAE007B10_010
4.00	8.50	80	25	XTCE009B10_	XTOB010BC1	XTAE009B10_010
5.50	11.3	80	25	XTCE018C10_	XTOB016CC1	XTAE018C10_016
7.50	16.0	80	25	XTCE018C10_	XTOB016CC1	XTAE018C10_016
11.0	21.7	80	35 & 32M35	XTCE025C10_	XTOB024CC1	XTAE032C10_024
15.0	29.3	80	50	XTCE032C10_	XTOB032CC1	XTAE032C10_032
18.5	36.0	80	63	XTCE040D00_	XTOB040DC1	XTAE040D00_040
22.0	41.0	80	80	XTCE050D00_	XTOB057DC1	XTAE065D00_057
30.0	55.0	80	100	XTCE065D00_	XTOB065DC1	XTAE065D00_065

② GEC/Alstom "Red Spot".
③ Underscore (_) indicates magnet coil code required. See **Table 34-261**, **Page 34-216**.

Note: See **Page 34-216** for more information on Wye-Delta (Star-Delta) applications.

34

Table 34-256. 400, 415V Type 2 Coordination — Contactor and Overload Relay (Motor Starter) with Circuit Breaker

P (kW)	I_e (A)	I_q (kA)	Circuit Breaker	Contactor Catalog Number ①	Overload Relay Catalog Number	Assembled Starter Catalog Number ①
0.12	0.41	15	②	②	②	②
0.18	0.60	15	②	②	②	②
0.25	0.80	15	②	②	②	②
0.37	1.10	15	②	②	②	②
0.55	1.50	15	②	②	②	②
0.75	1.90	15	②	②	②	②
1.10	2.60	15	②	②	②	②
1.50	3.60	15	②	②	②	②
2.20	5.00	15	②	②	②	②
3.00	6.60	15	②	②	②	②
4.00	8.50	15	HMCPE015E0C	XTCE018C10_	XTOB010CC1	XTAE018C10_010
5.50	11.3	15	HMCPE015E0C	XTCE018C10_	XTOB016CC1	XTAE018C10_016
7.50	16.0	15	②	②	②	②
11.0	21.7	15	②	②	②	②
15.0	29.3	15	②	②	②	②
18.5	36.0	50	②	②	②	②
22.0	41.0	50	HMCPE100R3C	XTCE050D00_	XTOB057DC1	XTAE050D00_057
30.0	55.0	50	HMCPE100R3C	XTCE065D00_	XTOB065DC1	XTAE065D00_065
37.0	68.0	80	HMCPJ250D5L	XTCE080F00_	XTOB070GC1	XTAE080F00_070
45.0	81.0	80	HMCPJ250F5L	XTCE095F00_	XTOB100GC1	XTAE095F00_100
55.0	99.0	80	HMCPJ250G5L	XTCE115G00_	XTOB125GC1	XTAE115G00_125
75.0	134.	80	HMCPJ250J5L	XTCE150G00_	XTOB150GC1	XTAE150G00_150
90.0	161.	80	HMCPJ250W5L	XTCE185L22_	XTOB220LC1	XTAE185L22_220
110.	196.	70	HMCPJ250W5L	XTCE225L22_	XTOB220LC1	XTAE225L22_220
132.	231.	70	HMCPL600R6G	XTCE300M22_	XTOT240C3S	XTAE300M22_240
160.	279.	70	HMCPL600X6G	XTCE300M22_	XTOT400C3S	XTAE300M22_400
200.	349.	70	HMCPL600P6G	XTCE400M22_	XTOT400C3S	XTAE400M22_400
250.	430.	70	HMCPL600M	XCE500M22_	XTOT540C3S	XTAE500M22_540

① Underscore (_) indicates magnet coil code required. See **Table 34-261**, **Page 34-216**.
② Use MMP contactor combination. See **Table 34-249**, **Page 34-210**.

Note: See **Page 34-216** for more information on Wye-Delta (Star Delta) applications.

Table 34-257. 525V Type 2 Coordination — Contactor and Overload Relay (Motor Starter) with Circuit Breaker

P (kW)	I_e (A)	I_q (kA)	Circuit Breaker	Contactor Catalog Number ③	Overload Relay Catalog Number	Assembled Starter Catalog Number ③
0.37	1.02	50	④	④	④	④
0.55	1.22	50	④	④	④	④
0.75	1.66	50	④	④	④	④
1.10	2.22	50	④	④	④	④
1.50	3.16	50	④	④	④	④
2.20	4.25	50	④	④	④	④
3.00	5.60	50	④	④	④	④
4.00	7.50	50	④	④	④	④
5.50	9.90	50	④	④	④	④
7.50	14.1	50	④	④	④	④
11.0	19.3	50	④	④	④	④
15.0	23.5	50	④	④	④	④
18.5	27.2	50	④	④	④	④
22.0	37.0	50	④	④	④	④
30.0	45.0	50	④	④	④	④
37.0	54.0	50	HMCP100R3C	XTCE080F00_	XTOB070GC1	XTAE080F00_070
45.0	66.0	50	HMCPJ250D5L	XTCE080F00_	XTOB070GC1	XTAE080F00_070
55.0	79.0	50	HMCPJ250F5L	XTCE115G00_	XTOB100GC1	XTAE115G00_100
75.0	111.	50	HMCPJ250J5L	XTCE115G00_	XTOB125GC1	XTAE115G00_125
90.0	130.	50	HMCPJ250K5L	XTCE185L00_	XTOB160LC1	XTAE185L00_160
110.	159.	50	HMCPJ250W5L	XTCE185L00_	XTOB160LC1	XTAE185L00_160
132.	185.	50	HMCPL600N6G	XTCE185L22_	XTOB220LC1	XTAE185L22_220
160.	225.	50	HMCPL600R6G	XTCE225L22_	XTOB250LC1	XTAE225L22_250
200.	270.	50	HMCPL600X6G	XTCE300M22_	XTOT290C3S	XTAE300M22_290

③ Underscore (_) indicates magnet coil code required. See **Table 34-261**, **Page 34-216**.
④ Use MMP contactor combination. See **Table 34-251**, **Page 34-211**.

Note: See **Page 34-216** for more information on Wye-Delta (Star Delta) applications.

Table 34-258. 480V Type 2 Coordination — Contactor and Overload Relay (Motor Starter) with Circuit Breaker

P (hp)	I_e (A)	I_q (kA)	Circuit Breaker	Contactor Catalog Number ①	Overload Relay Catalog Number	Assembled Starter Catalog Number ①
50.0	65.0	65	HMCPJ250D5L	XTCE080F00_	XTOB070GC1	XTAE080F00_070
60.0	77.0	65	HMCPJ250G5L	XTCE080F00_	XTOB100GC1	XTAE080F00_100
75.0	96.0	25	HMCPJ250J5L	XTCE115G00_	XTOB125GC1	XTAE115G00_125
100.	124.	50	HMCPJ250K5L	XTCE185L22_	XTOB160LC1	XTAE185L22_160
125.	156.	50	HMCPJ250W5L	XTCE185L22_	XTOB160LC1	XTAE185L22_160
150.	180.	25	HMCPL600N6G	XTCE225L22_	XTOB220LC1	XTAE225L22_220
200.	240.	50	HMCPL600N	XTCE300M22_	XTOB240C3S	XTAE300M22_240
250.	290.	50	HMCPL600R	XTCE300M22_	XTOB290C3S	XTAE300M22_290
300.	361.	50	HMCPL600Y	XTCE400M22_	XTOB400C3S	XTAE400M22_400
350.	414.	50	HMCPL600M	XTCE500M22_	XTOB540C3S	XTAE500M22_540

① Underscore (_) indicates magnet coil code required. See **Table 34-261**, **Page 34-216**.

Table 34-259. 400, 415V Type 2 Coordination — Contactor with Circuit Breaker ②

P (kW)	I_e (A)	I_q (kA)	Circuit Breaker — MCP	Contactor Catalog Number ③
1.50	3.60	50	HMCPE015E0C	XTCE018C10_
2.20	5.00	50	HMCPE015E0C	XTCE018C10_
3.00	6.60	50	HMCPE015E0C	XTCE018C10_
4.00	8.50	50	HMCPE015E0C	XTCE018C10_
5.50	11.3	50	HMCPE015E0C	XTCE018C10_
7.50	16.0	50	HMCPE015E0C	XTCE018C10_
11.0	21.7	50	HMCPE100R3C	XTCE040D00_
15.0	29.3	50	HMCPE100R3C	XTCE040D00_
18.5	36.0	50	HMCPE100R3C	XTCE040D00_
22.0	41.0	50	HMCPE100R3C	XTCE050D00_
30.0	55.0	50	HMCPE100R3C	XTCE065D00_
37.0	68.0	80	HMCPJ250D5L	XTCE080F00_
45.0	81.0	80	HMCPJ250F5L	XTCE095F00_
55.0	99.0	80	HMCPJ250G5L	XTCE115G00_
75.0	134.	80	HMCPJ250J5L	XTCE150G00_
90.0	161.	80	HMCPJ250W5L	XTCE185L22_
110.	196.	80	HMCPJ250W5L	XTCE225L22_
132.	231.	70	HMCPL600R	XTCE300M22_
160.	279.	70	HMCPL600X	XTCE300M22_
200.	350.	70	HMCPL600P	XTCE400M22_
250.	430.	70	HMCPL600M	XTCE500M22_

② For use with magnetic sensing means to monitor motor current.
③ Underscore (_) indicates magnet coil code required. See **Table 34-261**, **Page 34-216**.

Table 34-260. 480V Type 2 Coordination — Contactor with Circuit Breaker ④

P (hp)	I_e (A)	I_q (kA)	Circuit Breaker — MCP	Contactor Catalog Number ⑤
50.0	65.0	65	HMCPJ250G5L	XTCE080F00_
60.0	77.0	65	HMCPJ250G5L	XTCE080F00_
150.	180.	50	HMCPL600N	XTCE300M00_
200.	240.	50	HMCPL600N	XTCE300M22__
250.	300.	50	HMCPL600R	XTCE300M22_
300.	361.	50	HMCPL600Y	XTCE400M00_
350.	414.	50	HMCPL600M	XTCE500M00_

④ For use with magnetic sensing means to monitor motor current.
⑤ Underscore (_) indicates magnet coil code required. See **Table 34-261**, **Page 34-216**.

Wye-Delta (Star-Delta) Applications

If Type 2 Coordination is required when using Wye-Delta starters, the full voltage (direct on-line) test data that is included in this document is valid. To ensure proper protection, the K1M (Main), K3M (Star) and K5M (Delta) contactors must all be the same size (amperage). For Wye-Delta starter kits, please see **Page 34-44**.

Table 34-261. Magnet Coil Suffix

Coil Voltage	Suffix Code
Frame A – B	
110V 50 Hz, 120V 60 Hz	**A**
220V 50 Hz, 240V 60 Hz	**B**
230V 50 Hz	**F**
24V 50/60 Hz	**T**
24V DC	**TD** ①
415V 50 Hz, 480V 60 Hz	**C**
550V 50 Hz, 600V 60 Hz	**D**
208V 60 Hz	**E**
190V 50 Hz, 220V 60 Hz	**G**
240V 50 Hz, 277V 60 Hz	**H**
380V 50 Hz, 440V 60 Hz	**L**
400V 50 Hz	**N**
380V 60 Hz	**P**
12V 50/60 Hz	**R**
24V 50 Hz	**U**
42V 50 Hz, 48V 60 Hz	**W**
48V 50 Hz	**Y**
120V DC	**AD** ①
220V DC	**BD** ①
12V DC	**RD** ①
48V DC	**WD** ①

Coil Voltage	Suffix Code
Frame C – F	
110V 50 Hz, 120V 60 Hz	**A**
220V 50 Hz, 240V 60 Hz	**B**
230V 50 Hz	**F**
24V 50/60 Hz	**T**
24 – 27V DC	**TD** ①
415V 50 Hz, 480V 60 Hz	**C**
550V 50 Hz, 600V 60 Hz	**D**
208V 60 Hz	**E**
190V 50 Hz, 220V 60 Hz	**G**
240V 50 Hz, 277V 60 Hz	**H**
380V 50 Hz, 440V 60 Hz	**L**
400V 50 Hz	**N**
380V 60 Hz	**P**
12V 50/60 Hz	**R**
24V 50 Hz	**U**
42V 50 Hz, 48V 60 Hz	**W**
48V 50 Hz	**Y**
110 – 130V DC	**AD** ①
200 – 240V DC	**BD** ①
12 – 14V DC	**RD** ①
48 – 60V DC	**WD** ①

Coil Voltage	Suffix Code
Frame G	
100 – 120V 50/60 Hz	**A**
190 – 240V 50/60 Hz	**B**
24V 50/60 Hz	**T**
24 – 27V DC	**TD** ①
480 – 500V 50/60 Hz	**C**
380 – 440V 50/60 Hz	**L**
42 – 48V 50/60 Hz	**W**
110 – 130V DC	**AD** ①
200 – 240V DC	**BD** ①
48 – 60V DC	**WD** ①
Frame L – M	
110 – 250V 40 – 60 Hz/DC	**A**
250 – 500V 40 – 60 Hz/DC	**C**
48 – 110V 40 – 60 Hz/DC	**Y** ①
24 – 48V DC	**TD** ①

① With DC operation: Integrated diode-resistor combination, coil rating 2.6W.

Approvals for World Markets

Overview

The ***XT*** line of products is approved for use throughout the world, including the USA and Canada. As such, they can be used without restriction as devices for world markets.

The majority of countries permit the import of devices on the manufacturer's undertaking that they have been constructed in accordance with the pertinent specifications. In the USA and Canada, however, there is a legal obligation to obtain official approval. In these countries, devices and enclosures — sometimes even complete control systems — are tested and approved by independent bodies.

In Europe, there also used to be a legal obligation to obtain official approval for low-voltage switchgear and controlgear. For industrial control gear, this legal obligation has now been abolished, provided the devices have been manufactured and tested in accordance with harmonized European standards (such as IEC/EN 60947). There is then no longer a requirement for them to carry their country's own approval mark.

Since January 1997, all devices must conform to the European Low-Voltage Directive and, where intended for sale within the European Union, must carry the CE mark.

Europe
Conformité Européen
(CE)

This mark denotes that the device carrying it conforms to all relevant requirements and specifications. The mandatory application of this mark therefore enables the unrestricted use of marked devices within the European economic area.

Since January 1996, all devices sold within the European union must comply with the Electromagnetic Compatibility (EMC) Directive. ***XT*** has passed the required tests to these Directives, and the devices carry the CE mark, demonstrating compliance with the EMC Directive. *Because devices bearing the CE mark comply with the harmonized standards, approval and the associated marking is no longer required in the following countries:*

Belgium
Comité Electro-technique Belge
Belgisch Elektro-technisch Comité
(CEBEC)

Denmark
Danmarks Elektriske Materielkontrol
(DEMKO)

Finland
(FIMKO)

France
Union Technique de l'Electricité
(UTE)

Netherlands
Naamloze Vennootschap tot Keuring van Electrotechnische Materialien
(KEMA)

Norway
Norges Elektriske Materiellkontrol
(NEMKO)

Sweden
Svenska Elektriska Materiel-Kontrollanstalten
(SEMKO)

Switzerland
Schweizerischer Elektrotechischer Verein
(SEV)

Devices the USA and Canada have UL and CSA approval.

USA
Underwriters Laboratories
(UL)

Listing

Recognition

Canada
Canadian Standards Association
(CSA)

Recently introduced is the mandatory approval of electrical products for:

- Slovakia
- Poland
- South Africa
- China
- Russia
- Turkey
- Argentina

Marking is partly mandatory for these countries. The IEC rating data is accepted as in other European countries.

Approval is not mandatory in the Czech Republic and Hungary. The manufacturer's declaration of conformity is sufficient here.

Romania requires that components that are to be used in public buildings must be approved by the Romanian test authority ICECON.

Russia
Devices for Russia must bear the appropriate marking.

Russia
Goststandart
(GOST-R)

South Africa
ZA
SABS

Argentina

Selection of Devices

"Selection appropriate for export" does not mean merely meeting the requisite approvals and conformity to relevant specifications. The meaning of the term goes a great deal further by even including that equipment and installations must be designed to a concept with export in mind.

The following are important criteria for selecting switchgear suitable for export:

- **For motor-protective circuit-breakers**
  Use inherently short-circuit proof switches capable of controlling the highest prospective fault levels at the point of installation without the need for back-up protection.
  - ❑ **Advantage:**
    - – No restrictions whatsoever for installation
    - – Complete independence from the on-site protective system
    - – No problems getting spare parts
- **For circuit-breakers**
  Use types with visible contacts, quick-make and quick-break operation as standard. Use current-limiting circuit-breakers for high short-circuit levels. Selective switches are recommended for the selective graduation of networks.
  - ❑ **Advantage:**
    - – Independence from local accident prevention regulations requiring visible contacts, and safety faults caused by inexperienced operating personnel.
    - – The effects of short-circuits are kept to a minimum.
    - – Fuseless installations offer greater safety and reliability in plant operation. In the event of a fault, only the faulty section of the system is isolated.
- **For contactors**
  Use contactors whose entire range provides consistently reliable operation in the event of voltage drops (consistently down to 80% U_n should be aimed for) and whose contact system will not assume an indeterminate position either on closing or on opening in such conditions.
  - ❑ **Advantage:**
    - – During the electrification work in areas such as Africa and the Middle East, an insufficient voltage stability is — at least for a certain time — likely in many applications (for example due to long spur lines or small local generators). The use of devices that fulfill the above requirements will eliminate one of the main failure causes related to contactors.
- **For enclosures**
  Use insulated enclosures with transparent covers (i.e. “totally insulated” enclosures).
  - ❑ **Advantage:**
    - – Total insulation is the best possible protective measure from the user’s point of view, avoiding reliance on the possibly doubtful skills of unknown installation personnel. Furthermore, protective measures based on earthing are often extremely difficult, if not impossible (in the Middle East, for example, due to the dryness of the ground).
    - – Insulated enclosures completely eliminate the need for any additional protection against corrosion. The transparent covers contribute significantly to the correct operation of a system, because switchgear operation can be monitored even with the doors or covers closed, thus virtually eliminating the possibility of these being left open through carelessness. The transparent cover is an important contribution to safety, especially where exports to areas of uncertain skills are concerned.
- **For overcurrent protective devices**
  Always use circuit-breakers and motor-protective circuit-breakers. Avoid fuses as far as possible.
  - ❑ **Advantage:**
    - – The operational reliability of a system is especially important for export contracts. Circuit-breakers and motor-protective circuit-breakers provide this reliability in full measure since they can be immediately reclosed once a fault has been cleared, they disconnect all poles, they have ideal protection through high tripping accuracy and they can be used for selective operation. Because they have no fuses or other consumables, they also greatly reduce the problem of obtaining replacement parts. The advantages of fuseless design for export are especially evident in this case. No complicated investigation is needed to find out which fusing system is used in the respective location and which specifications have to be followed to select the correct fuses. Often several different fuse systems with widely varying characteristics are used side-by-side in the same country. For the uninitiated, it may be almost impossible to find the right fuse in these circumstances. These problems do not arise where a circuit-breaker is used.
- **For main switches and safety switches**
  Use devices with positive contact separation and clear switch position indication.
  - ❑ **Advantage:**
    - – The mechanical coupling of the actuating element with the contacts ensues that the OFF position is indicated only when all main contacts are separated by the prescribed distance, and only in this position can the switch be padlocked. This ensures safety when carrying out maintenance and repair work on the installation or machinery.

Test Authorities

USA
USA
UL

Canada
CDN
CSA

Romania
RO
ICECON
ML PAT

Russia
RUS
GOST-R

South Africa
ZA
SABS

Slovakia
SK
SKTC

Poland
PL
BBJ-SEP

Turkey
TR
TSE

China
PRC
CCC

Ukraine
UA
Ukrain-GOST

Shipping Classifications

Germany
Germanischer Lloyd
(GL)

Great Britain
Lloyd's Register of
Shipping (LR)

France
Bureau Veritas (BV)

Russia
Russian Maritime
Register of Shipping
(RS)

Italy
Registro Italiano Navale
(RINA)

Norway
Det Norske Veritas
(DNV)

Poland
Polski Rejestr Statkow
(PRS)

Approvals for North America

In the USA, the legally established OSHA (Occupational Safety and Health Act) and the NEC (National Electrical Code) require the use of approved devices and systems.

In Canada, all electrical apparatus must comply with the CEC (Canadian Electrical Code), requires that all equipment and installations have CSA approval.

In addition to the normal UL and CSA approvals, the trade regulations originating from the NAFTA agreements allow the application for a joint UL and CSA approval. The devices then carry a logo that is recognized in both countries.

Some local inspectors and end users still refuse to accept the joint listing.

Table 34-262. Approvals for North America

Type of Approval	Approval Mark
The device is UL- and CSA-approved as discrete device.	
The device is CSA-approved as discrete device.	
The device is UL-approved as discrete device.	
The device contains UL-approved components; its approval conditions must be maintained in use (UL Recognized). The device is CSA-approved as discrete device.	

34

IEC Utilization Categories

(See also IEC/EN 60947-1; 2.1.18/IEV 441-17-19)

A combination of specified requirements relating to the condition in which the switching device or fuse fulfills its purpose and selected to represent a characteristic group of real-life applications. The specified requirements may, for example, relate to the values of making and breaking capacity and other characteristic values, data concerning associated circuits and the applicable conditions of use and operational behavior.

Table 34-263. Used in Technical Data & Formula

Code	Descriptions
DF	Duty factory
$I_{\Delta n}$	Response value of earth-fault release
I_{cm}	Rated short-circuit making capacity
I_{cn}	Rated short-circuit breaking capacity
I_{cs}	Rated service short-circuit breaking capacity
I_{cu}	Rated ultimate short-circuit breaking capacity
I_{cw}	Rated short-time withstand current
I_e	Rated operational current
I_k	Transformer initial short-circuit AC current
I_L	Load monitoring response value
I_n	Rated current
I_{NT}	Transformer rated current
I_{PK}	Rated peak withstand current
I_q	Rated conditional short-circuit current
I_r	Overcurrent release set value
I_{rm}	Response value of non-delayed short-circuit release
I_i	Response value of non-delayed short-circuit release
I_{rmf}	Response value of fixed, non-delayed short-circuit release
I_{rmv}	Response value of short-time delayed short-circuit release
I_{sd}	Response value of short-time delayed short-circuit release
I_T	Response value of earth-fault release
I_g	Response value of earth-fault release
I_{th}	Conventional free air thermal current
I_{the}	Conventional thermal current of enclosed devices
I_u	Rated uninterrupted current
S_{NT}	Transformer rating
t_r	Time delay of overload release response
t_T	Time delay of earth-fault release response
t_g	Time delay of earth-fault release response
t_v	Time delay of short-circuit release response
U_c	Rated actuating voltage
U_e	Rated operational voltage
U_i	Rated insulation voltage
U_{imp}	Rated impulse withstand voltage
U_k	Transformer short-circuit voltage
U_s	Rated control voltage

Annex A (informative)

Table 34-264. Examples of Utilization Categories for Low-Voltage Switchgear and Controlgear ①

Category	Typical Applications	Relevant IEC Product Standard
Nature of Current — AC		
AC-1	Non-inductive or slightly inductive loads, resistance furnaces	60947-4-1
AC-2	Slip-ring motors: starting, switching off	60947-4-1
AC-3	Squirrel-cage motors: starting, switching off motors during running	60947-4-1
AC-4	Squirrel-cage motors: starting, plugging ②, inching ③	60947-4-1
AC-5a	Switching of electric discharge lamp controls	60947-4-1
AC-5b	Switching of incandescent lamps	60947-4-1
AC-6a	Switching of transformers	60947-4-1
AC-6b	Switching of capacitor banks	60947-4-1
AC-7a	Slightly inductive loads for household appliances and similar applications	61095
AC-7b	Motor-loads for household applications	61095
AC-8a	Hermetic refrigerant compressor motor control with manual resetting of overload releases	60947-4-1
AC-8b	Hermetic refrigerant compressor motor control with automatic resetting of overload releases	60947-4-1
AC-12	Control of resistive loads and solid-state loads with isolation by optocouplers	60947-5-1
AC-12	Control of resistive loads and solid-state loads with optical isolation	60947-5-2
AC-13	Control of solid-state loads with transformer isolation	60947-5-1
AC-14	Control of small electromagnetic loads	60947-5-1
AC-15	Control of AC electromagnetic loads	60947-5-1
AC-20	Connecting and disconnecting under no-load conditions	60947-3
AC-21	Switching of resistive loads, including moderate overloads	60947-3
AC-22	Switching of mixed resistive and inductive loads, including moderate overloads	60947-3
AC-23	Switching of motor loads or other highly inductive loads	60947-3

① 60947-1 © IEC: 2004.
② By plugging is understood stopping or reversing the motor rapidly by reversing motor primary connections while the motor is running.
③ By inching (jogging) is understood energizing a motor once or repeatedly for short periods to obtain small movements of the driven mechanism.

Annex A (informative)

Table 34-264. Examples of Utilization Categories for Low-Voltage Switchgear and Controlgear ① (Continued)

Category	Typical Applications	Relevant IEC Product Standard
Nature of Current — AC (Continued)		
AC-31	Non inductive or slightly inductive loads	60947-6-1
AC-33	Motor loads or mixed loads including motors, resistive loads and up to 30% incandescent lamp loads	60947-6-1
AC-35	Electric discharge lamp loads	60947-6-1
AC-36	Incandescent lamp loads	60947-6-1
AC-40	Distribution circuits comprising mixed resistive and reactive loads having a resultant inductive reactance	60947-6-2
AC-41	Non-inductive or slightly inductive loads, resistance furnaces	60947-6-2
AC-42	Slip-ring motors: starting, switching off	60947-6-2
AC-43	Squirrel-cage motors: starting, switching off motors during running	60947-6-2
AC-44	Squirrel-cage motors: starting, plugging ②, inching ③	60947-6-2
AC-45a	Switching of electric discharge lamp controls	60947-6-2
AC-45b	Switching of incandescent lamps	60947-6-2
AC-51	Non-inductive or slightly inductive loads, resistance furnaces	60947-4-3
AC-52a	Control of slip ring motor stators: 8 h duty with on-load currents for start, acceleration, run	60947-4-2
AC-52b	Control of slip ring motor stators: intermittent duty	60947-4-2
AC-53a	Control of squirrel-cage motors: 8 h duty with on-load currents for start, acceleration, run	60947-4-2
AC-53b	Control of squirrel-cage motors: intermittent duty	60947-4-2
AC-55a	Switching of electric discharge lamp controls	60947-4-3
AC-55b	Switching of incandescent lamps	60947-4-3
AC-56a	Switching of transformers	60947-4-3
AC-56b	Switching of capacitor banks	60947-4-3
AC-58a	Control of hermetic refrigerant compressor motors with automatic resetting of overload releases: 8 h duty with on-load currents for start, acceleration, run	60947-4-2
AC-58b	Control of hermetic refrigerant compressor motors with automatic resetting of overload releases: intermittent duty	60947-4-2
AC-140	Control of small electromagnetic loads with holding (closed) current ≤ 0,2 A, e.g. contactor relays	60947-5-2
Nature of Current — AC and DC		
A	Protection of circuits, with no rated short-time withstand current	60947-2
B	Protection of circuits, with a rated short-time withstand current	60947-2
Nature of Current — DC		
DC-1	Non-inductive or slightly inductive loads, resistance furnaces	60947-4-1
DC-3	Shunt-motors: starting, plugging ②, inching ③, Dynamic breaking of motors	60947-4-1
DC-5	Series-motors: starting, plugging ②, inching ③, Dynamic breaking of motors	60947-4-1
DC-6	Switching of incandescent lamps	60947-4-1
DC-12	Control of resistive loads and solid-state loads with isolation by optocouplers	60947-5-1
DC-12	Control of resistive loads and solid-state loads with optical isolation	60947-5-2
DC-13	Control of electromagnets	60947-5-1
DC-13	Control of electromagnets	60947-5-2
DC-14	Control of electromagnetic loads having economy resistors in circuit	60947-5-1
DC-20	Connecting and disconnecting under no-load conditions	60947-3
DC-21	Switching of resistive loads, including moderate overloads	60947-3
DC-22	Switching of mixed resistive and inductive loads, including moderate overloads (e.g. shunt motors)	60947-3
DC-23	Switching of motor loads or other highly inductive loads (e.g. series motors)	60947-3
DC-31	Resistive loads	60947-6-1
DC-33	Motor loads or mixed loads including motors	60947-6-1
DC-36	Incandescent lamp loads	60947-6-1
DC-40	Distribution circuits comprising mixed resistive and reactive loads having a resultant inductive reactance	60947-6-2
DC-41	Non-inductive or slightly inductive loads, resistance furnaces	60947-6-2
DC-43	Shunt-motors: starting, plugging ②, inching ③, Dynamic breaking of DC	60947-6-2
DC-45	Series-motors: starting, plugging ②, inching ③, Dynamic breaking of DC	60947-6-2
DC-46	Switching of incandescent lamps	60947-6-2

① 60947-1 © IEC: 2004.
② By plugging is understood stopping or reversing the motor rapidly by reversing motor primary connections while the motor is running.
③ By inching (jogging) is understood energizing a motor once or repeatedly for short periods to obtain small movements of the driven mechanism.

Motor Ratings Data

Ampere Rating of AC and DC Motors

Ampere ratings of motors vary somewhat, depending upon the type of motor. The values given below are for drip-proof, Class B insulated (T Frame) where available, 1.15 service factor, NEMA Design B motors. These values represent an average full load motor current which was calculated from the motor performance data published by several motor manufacturers. In the case of high torque squirrel cage motors, the ampere ratings will be at least 10% greater than the values given below.

Caution — These average ratings could be high or low for a specific motor and therefore heater coil selection on this basis always involves risk. For fully reliable motor protection, select heater coils on the basis of full load current rating as shown on the motor nameplate.

Ampere Ratings of Three-Phase, 60 Hz, AC Induction Motor

hp	Syn. Speed RPM	Current in Amperes					
		200V	230V	380V ①	460V	575V	2200V
1/4	1800	1.09	.95	.55	.48	.38	—
	1200	1.61	1.40	.81	.70	.56	—
	900	1.84	1.60	.93	.80	.64	—
1/3	1800	1.37	1.19	.69	.60	.48	—
	1200	1.83	1.59	.92	.80	.64	—
	900	2.07	1.80	1.04	.90	.72	—
1/2	1800	1.98	1.72	.99	.86	.69	—
	1200	2.47	2.15	1.24	1.08	.86	—
	900	2.74	2.38	1.38	1.19	.95	—
3/4	1800	2.83	2.46	1.42	1.23	.98	—
	1200	3.36	2.92	1.69	1.46	1.17	—
	900	3.75	3.26	1.88	1.63	1.30	—
1	3600	3.22	2.80	1.70	1.40	1.12	—
	1800	4.09	3.56	2.06	1.78	1.42	—
	1200	4.32	3.76	2.28	1.88	1.50	—
	900	4.95	4.30	2.60	2.15	1.72	—
1-1/2	3600	5.01	4.36	2.64	2.18	1.74	—
	1800	5.59	4.86	2.94	2.43	1.94	—
	1200	6.07	5.28	3.20	2.64	2.11	—
	900	6.44	5.60	3.39	2.80	2.24	—
2	3600	6.44	5.60	3.39	2.80	2.24	—
	1800	7.36	6.40	3.87	3.20	2.56	—
	1200	7.87	6.84	4.14	3.42	2.74	—
	900	9.09	7.90	4.77	3.95	3.16	—
3	3600	9.59	8.34	5.02	4.17	3.34	—
	1800	10.8	9.40	5.70	4.70	3.76	—
	1200	11.7	10.2	6.20	5.12	4.10	—
	900	13.1	11.4	6.90	5.70	4.55	—
5	3600	15.5	13.5	8.20	6.76	5.41	—
	1800	16.6	14.4	8.74	7.21	5.78	—
	1200	18.2	15.8	9.59	7.91	6.32	—
	900	18.3	15.9	9.60	7.92	6.33	—
7-1/2	3600	22.4	19.5	11.8	9.79	7.81	—
	1800	24.7	21.5	13.0	10.7	8.55	—
	1200	25.1	21.8	13.2	10.9	8.70	—
	900	26.5	23.0	13.9	11.5	9.19	—
10	3600	29.2	25.4	15.4	12.7	10.1	—
	1800	30.8	26.8	16.3	13.4	10.7	—
	1200	32.2	28.0	16.9	14.0	11.2	—
	900	35.1	30.5	18.5	15.2	12.2	—
15	3600	41.9	36.4	22.0	18.2	14.5	—
	1800	45.1	39.2	23.7	19.6	15.7	—
	1200	47.6	41.4	25.0	20.7	16.5	—
	900	51.2	44.5	26.9	22.2	17.8	—
20	3600	58.0	50.4	30.5	25.2	20.1	—
	1800	58.9	51.2	31.0	25.6	20.5	—
	1200	60.7	52.8	31.9	26.4	21.1	—
	900	63.1	54.9	33.2	27.4	21.9	—
25	3600	69.9	60.8	36.8	30.4	24.3	—
	1800	74.5	64.8	39.2	32.4	25.9	—
	1200	75.4	65.6	39.6	32.8	26.2	—
	900	77.4	67.3	40.7	33.7	27.0	—
30	3600	84.8	73.7	44.4	36.8	29.4	—
	1800	86.9	75.6	45.7	37.8	30.2	—
	1200	90.6	78.8	47.6	39.4	31.5	—
	900	94.1	81.8	49.5	40.9	32.7	—
40	3600	111	96.4	58.2	48.2	38.5	—
	1800	116	101	61.0	50.4	40.3	—
	1200	117	102	61.2	50.6	40.4	—
	900	121	105	63.2	52.2	41.7	—
50	3600	138	120	72.9	60.1	48.2	—
	1800	143	124	75.2	62.2	49.7	—
	1200	145	126	76.2	63.0	50.4	—
	900	150	130	78.5	65.0	52.0	—
60	3600	164	143	86.8	71.7	57.3	—
	1800	171	140	90.0	74.5	59.4	—
	1200	173	150	91.0	75.0	60.0	—
	900	177	154	93.1	77.0	61.5	—
75	3600	206	179	108	89.6	71.7	—
	1800	210	183	111	91.6	73.2	—
	1200	212	184	112	92.0	73.5	—
	900	222	193	117	96.5	77.5	—
100	3600	266	231	140	115	92.2	—
	1800	271	236	144	118	94.8	23.6
	1200	275	239	145	120	95.6	24.2
	900	290	252	153	126	101	24.8
125	3600	—	292	176	146	116	—
	1800	—	293	177	147	117	29.2
	1200	—	298	180	149	119	29.9
	900	—	305	186	153	122	30.9
150	3600	—	343	208	171	137	—
	1800	—	348	210	174	139	34.8
	1200	—	350	210	174	139	35.5
	900	—	365	211	183	146	37.0
200	3600	—	452	257	226	181	—
	1800	—	458	265	229	184	46.7
	1200	—	460	266	230	184	47.0
	900	—	482	279	241	193	49.4
250	3600	—	559	338	279	223	—
	1800	—	568	343	284	227	57.5
	1200	—	573	345	287	229	58.5
	900	—	600	347	300	240	60.5
300	1800	—	678	392	339	271	69.0
	1200	—	684	395	342	274	70.0
400	1800	—	896	518	448	358	91.8
500	1800	—	1110	642	555	444	116

① 380V 50 Hz.

Single-Phase AC Motors

Table 430.248. **Full-Load Currents in Amperes, Single-Phase Alternating-Current Motors**

The following values of full-load currents are for motors running at usual speeds and motors with normal torque characteristics. Motors built for especially low speeds or high torques may have higher full-load currents and multispeed motors will have full-load current varying with speed, in which case the nameplate current ratings shall be used.

The voltages listed are rated motor voltages. The currents listed shall be permitted for system voltage ranges of 110 to 120 and 220 to 240V.

hp	115V	200V	208V	230V
1/6	4.4	2.5	2.4	2.2
1/4	5.8	3.3	3.2	2.9
1/3	7.2	4.1	4.0	3.6
1/2	9.8	5.6	5.4	4.9
3/4	13.8	7.9	7.6	6.9
1	16	9.2	8.8	8
1-1/2	20	11.5	11	10
2	24	13.8	13.2	12
3	34	19.6	18.7	17
5	56	32.2	30.8	28
7-1/2	80	46	44	40
10	100	57.5	55	50

Three-Phase AC Motors

The following values of full-load currents are typical for motors running at speeds usual for belted motors and motors with normal torque characteristics.

Motors built for low speeds (1,200 RPM or less) or high torques may require more running current and multispeed motors will have full-load current varying with speed. In these cases the nameplate current rating shall be used.

The voltages listed are rated motor voltages. The currents listed shall be permitted for system voltage ranges of 110 to 120, 220 to 240, 440 to 480 and 550 to 600V.

DC Motors

Table 430.247. **Full-Load Current in Amperes, Direct-Current Motors**

The following values of full-load currents are for motors running at base speed.

Note: These are average direct-current quantities.

hp	Armature Voltage Rating ②		Ampere Capacity of Fuses for Motors	
			Recommended Values	
	120V	240V	120V	240V
1/4	3.1	1.6	5	3
1/3	4.1	2.0	5	3
1/2	5.4	2.7	7	3
3/4	7.6	3.8	10	5
1	9.5	4.7	15	7
1-1/2	13.2	6.6	20	10
2	17	8.5	25	12
3	25	12.2	30	15
5	40	20	50	25
7-1/2	58	29	80	40
10	76	38	100	50
15	—	55	—	75
20	—	72	—	100
25	—	89	—	125
30	—	106	—	150
40	—	140	—	200
50	—	173	—	250
60	—	206	—	275
75	—	255	—	350
100	—	341	—	500
125	—	425	—	600
150	—	506	—	—
200	—	675	—	—

② These are average direct-current quantities.

Table 430.250. **Full-Load Current Three-Phase Alternating-Current Motors**

hp	Induction Type Squirrel-Cage and Wound-Rotor Amperes							Synchronous Type Unity Power Factor ① Amperes			
	115V	200V	208V	230V	460V	575V	2300V	230V	460V	575V	2300V
1/2	4.4	2.5	2.4	2.2	1.1	.9	—	—	—	—	—
3/4	6.4	3.7	3.5	3.2	1.6	1.3	—	—	—	—	—
1	8.4	4.8	4.6	4.2	2.1	1.7	—	—	—	—	—
1-1/2	12.0	6.9	6.6	6.0	3.0	2.4	—	—	—	—	—
2	13.6	7.8	7.5	6.8	3.4	2.7	—	—	—	—	—
3	—	11.0	10.6	9.6	4.8	3.9	—	—	—	—	—
5	—	17.5	16.7	15.2	7.6	6.1	—	—	—	—	—
7-1/2	—	25.3	24.2	22	11	9	—	—	—	—	—
10	—	32.2	30.8	28	14	11	—	—	—	—	—
15	—	48.3	46.2	42	21	17	—	—	—	—	—
20	—	62.1	59.4	54	27	22	—	—	—	—	—
25	—	78.2	74.8	68	34	27	—	53	26	21	—
30	—	92	88	80	40	32	—	63	32	26	—
40	—	120	114	104	52	41	—	83	41	33	—
50	—	150	143	130	65	52	—	104	52	42	—
60	—	177	169	154	77	62	16	123	61	49	12
75	—	221	211	192	96	77	20	155	78	62	15
100	—	285	273	248	124	99	26	202	101	81	20
125	—	359	343	312	156	125	31	253	126	101	25
150	—	414	396	360	180	144	37	302	151	121	30
200	—	552	528	480	240	192	49	400	201	161	40
250	—	—	—	—	302	242	60	—	—	—	—
300	—	—	—	—	361	289	72	—	—	—	—
350	—	—	—	—	414	336	83	—	—	—	—
400	—	—	—	—	477	382	95	—	—	—	—
450	—	—	—	—	515	412	103	—	—	—	—
500	—	—	—	—	590	472	118	—	—	—	—

① For 90 and 80 percent power factor, the above figures shall be multiplied by 1.1 and 1.25 respectively.

Ampacities of Insulated Conductors (Based on 2005 NEC ①)

Table 310.16. **Allowable Ampacities of Insulated Conductors Rated 0 – 2000V, 60° – 90°C (140° – 194°F), Not More Than Three Current-Carrying Conductors in Raceway or Cable or Earth (Directly Buried), Based on Ambient Temperature of 30°C (86°F)**

Size	Temperature Rating of Conductor. See NEC Table 310-13.						Size
AWG kcmil	60°C (140°F)	75°C (167°F)	90°C (194°F)	60°C (140°F)	75°C (167°F)	90°C (194°F)	AWG kcmil
	Types TW†, UF ②	Types FEPW ②, RH ②, RHW ②, THHW ②, THW ②, THWN ②, XHHW ②, USE ②, ZW ②	Types TBS, SA, SIS, FEP ②, FEPB ②, MI, RHH ②, RHW-2, THHN ②, THHW ②, THW-2 ②, THWN-2 ②, USE-2, XHH, XHHW ②, XHHW-2, ZW-2	Types TW ②, UF ②	Types RH ②, RHW ②, THHW ②, THW ②, THWN ②, XHHW ②, USE ②	Types TBS, SA, SIS, THHN ②, THHW ②, THW-2, THWN-2, RHH ②, RHW-2, USE-2, XHH, XHHW, XHHW-2, ZW-2	
	Copper			Aluminum or Copper-Clad Aluminum			
18	—	—	14	—	—	—	—
16	—	—	18	—	—	—	—
14	20†	20†	25†	—	—	—	—
12	25†	25†	30†	20†	20†	25†	12
10	30	35†	40†	25	30†	35†	10
8	40	50	55	30	40	45	8
6	55	65	75	40	50	60	6
4	70	85	95	55	65	75	4
3	85	100	110	65	75	85	3
2	95	115	130	75	90	100	2
1	110	130	150	85	100	115	1
1/0	125	150	170	100	120	135	1/0
2/0	145	175	195	115	135	150	2/0
3/0	165	200	225	130	155	175	3/0
4/0	195	230	260	150	180	205	4/0
250	215	255	290	170	205	230	250
300	240	285	320	190	230	255	300
350	260	310	350	210	250	280	350
400	280	335	380	225	270	305	400
500	320	380	430	260	310	350	500
600	355	420	475	285	340	385	600
700	385	460	520	310	375	420	700
750	400	475	535	320	385	435	750
800	410	490	555	330	395	450	800
900	435	520	585	355	425	480	900
1000	455	545	615	375	445	500	1000
1250	495	590	665	405	485	545	1250
1500	520	625	705	435	520	585	1500
1750	545	650	735	455	545	615	1750
2000	560	665	750	470	560	630	2000

Correction Factors

Ambient Temp. °C	For Ambient Temperatures Other Than 30°C (86°F), Multiply the Allowable Ampacities Shown Above by the Appropriate Factor Shown Below						Ambient Temp. °F
21 – 25	1.08	1.05	1.04	1.08	1.05	1.04	70 – 77
26 – 30	1.00	1.00	1.00	1.00	1.00	1.00	78 – 86
31 – 35	.91	.94	.96	.91	.94	.96	87 – 95
36 – 40	.82	.88	.91	.82	.88	.91	96 – 104
41 – 45	.71	.82	.87	.71	.82	.87	105 – 113
46 – 50	.58	.75	.82	.58	.75	.82	114 – 122
51 – 55	.41	.67	.76	.41	.67	.76	123 – 131
56 – 60	—	.58	.71	—	.58	.71	132 – 140
61 – 70	—	.33	.58	—	.33	.58	141 – 158
71 – 80	—	—	.41	—	—	.41	159 – 176

① Reprinted by permission from NFPA 70-2005. National Electrical Code®, Copyright© 2005. National Fire Protection Association, Batterymarch Park, Quincy, MA 02269.

② Unless otherwise specifically permitted elsewhere in this *Code*, the overcurrent protection for conductor types marked with an obelisk (†) shall not exceed 15A for No. 14, 20A for No. 12 and 30A for No. 10 copper; or 15A for No. 12 and 25A for No. 10 aluminum and copper-clad aluminum after any correction factors for ambient temperature and number of conductors have been applied.

Table 310.15 (B)(z)(a). **Adjustment Factor for More Than Three Current-Carrying Conductors in Raceway or Cable**

Where the number of current-carrying conductors in a raceway or cable exceeds three, the allowable ampacities shall be reduced as shown in the following table:

Number of Current-Carrying Conductors	Percent of Values in Tables as Adjusted for Ambient Temperature if Necessary
4 – 6	80
7 – 9	70
10 – 20	50
21 – 30	45
31 – 40	40
41 and above	35

Where single conductors or multiconductor cables are stacked or bundled longer than 24 in. (610 mm) without maintaining spacing and are not installed in raceways, the allowable ampacity of each conductor shall be reduced as shown in the above table.

Ampacities of Insulated Conductors (Based on 2005 NEC ①) — Continued

Table 310.18. **Allowable Ampacities of Three Single Insulated Conductors Rated 0 – 2000V, 150° – 250°C (302° – 482°F), in Raceway or Cable Based on Ambient Air Temperature of 40°C (104°F)**

Size	Temperature Rating of Conductor. See NEC Table 310-13.				Size
AWG kcmil	150°C (302°F)	200°C (392°F)	250°C (482°F)	150°C (302°F)	AWG kcmil
	Type Z	Types FEP, FEPB, PFA	Types PFAH, TFE	Type Z	
	Copper		Nickel or Nickel-Coated Copper	Aluminum or Copper-Clad Aluminum	
14	34	36	39	—	14
12	43	45	54	30	12
10	55	60	73	44	10
8	76	83	93	57	8
6	96	110	117	75	6
4	120	125	148	94	4
3	143	152	166	109	3
2	160	171	191	124	2
1	186	197	215	145	1
1/0	215	229	244	169	1/0
2/0	251	260	273	198	2/0
3/0	288	297	308	227	3/0
4/0	332	346	361	260	4/0
250	—	—	—	—	250
300	—	—	—	—	300
350	—	—	—	—	350
400	—	—	—	—	400
500	—	—	—	—	500
600	—	—	—	—	600
700	—	—	—	—	700
750	—	—	—	—	750
800	—	—	—	—	800
1000	—	—	—	—	1000
1500	—	—	—	—	1500
2000	—	—	—	—	2000

Correction Factors

Ambient Temp. °C	For Ambient Temperatures Other Than 40°C (104°F), Multiply the Allowable Ampacities Shown Above By the Appropriate Factor Shown Below				Ambient Temp. °F
41 – 50	.95	.97	.98	.95	105 – 122
51 – 60	.90	.94	.95	.90	123 – 140
61 – 70	.85	.90	.93	.85	141 – 158
71 – 80	.80	.87	.90	.80	159 – 176
81 – 90	.74	.83	.87	.74	177 – 194
91 – 100	.67	.79	.85	.67	195 – 212
101 – 120	.52	.71	.79	.52	213 – 248
121 – 140	.30	.61	.72	.30	249 – 284
141 – 160	—	.50	.65	—	285 – 320
161 – 180	—	.35	.58	—	321 – 356
181 – 200	—	—	.49	—	357 – 392
201 – 225	—	—	.35	—	393 – 437

① Reprinted by permission from NFPA 70-2005. National Electrical Code®, Copyright© 2005. National Fire Protection Association, Batterymarch Park, Quincy, MA 02269.

34

Enclosure Ratings

The UL, NEMA and IEC organizations (and other international groups) define degrees of protection provided by electrical enclosures with respect to personnel, equipment within the housing and the ingress of water.

Subtle differences do exist between the test procedures and specifications of these organizations.

To claim ratings to NEMA specifications, the testing is performed and certified by the manufacturers themselves.

To comply to UL and IEC specifications, the manufacturers must submit product samples, materials used and other data to an independent testing laboratory before ratings can be claimed.

In addition, IEC "IP" ratings differ from NEMA in that they do not apply to protection against the risk of explosion or conditions such as humidity, corrosive gases, fungi or vermin. In addition, different parts of the equipment can have different degrees of protection and still comply.

Table 34-265 is a comparison of the NEMA/UL/IEC enclosure specifications to be used as an approximate reference only. **Do not use the table to convert from IEC to NEMA designations.** For a definition of the ratings listed, see examples below and tables on **Page 34-227**.

Table 34-265. NEMA/UL/IEC Enclosure Type Cross-Reference — Approximate

NEMA Enclosure Rating	IP10	IP20	IP21	IP22	IP23	IP30	IP31	IP32	IP33	IP40	IP41	IP42	IP43	IP50	IP51	IP52	IP53	IP54	IP55	IP56	IP60	IP61	IP62	IP63	IP64	IP65	IP66	IP67	IP68
1	X	X	X	X	X																								
2	X	X	X	X	X																								
3	X	X	X	X	X	X	X	X	X	X	X	X	X	X	X	X	X	X	X	X	X	X	X	X	X				
3R	X	X	X	X	X	X	X	X																					
3S	X	X	X	X	X	X	X	X	X	X	X	X	X	X	X	X	X	X	X	X	X	X	X	X	X				
4	X	X	X	X	X	X	X	X	X	X	X	X	X	X	X	X	X	X	X	X	X	X	X	X	X	X	X		
4X	X	X	X	X	X	X	X	X	X	X	X	X	X	X	X	X	X	X	X	X	X	X	X	X	X	X	X		
6	X	X	X	X	X	X	X	X	X	X	X	X	X	X	X	X	X	X	X	X	X	X	X	X	X	X	X	X	
6P	X	X	X	X	X	X	X	X	X	X	X	X	X	X	X	X	X	X	X	X	X	X	X	X	X	X	X	X	X
12	X	X	X	X	X	X	X	X	X	X	X	X	X	X	X	X	X	X	X	X	X	X	X	X	X				
13	X	X	X	X	X	X	X	X	X	X	X	X	X	X	X	X	X	X	X	X	X	X	X	X	X				

Note: IEC 529 does not specify equivalents to NEMA Enclosure Types 7, 8, 9 or 10.

Table 34-266. IEC Environmental Enclosure Ratings — Examples of Designations

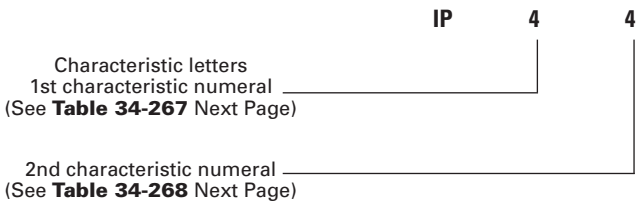

An enclosure with this designation is protected against the penetration of solid objects greater than 1.0 mm and against splashing water.

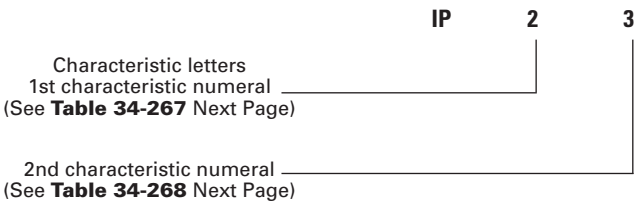

An enclosure with this designation is protected against the penetration of solid objects greater than 12 mm and against splashing water.

Index of Enclosure Ratings — IEC

Table 34-267. 1st Characteristic Numeral

Protected against contact and penetration of solid bodies.	
0	Not protected.
1	Protection against solid objects greater than 50 mm.
2	Protection against solid objects greater than 12 mm.
3	Protection against solid objects greater than 2.5 mm.
4	Protection against solid objects greater than 1.0 mm.
5	Dust protected.
6	Dust-tight.

Table 34-268. 2nd Characteristic Numeral

0	Not protected.
1	Protection against dripping water.
2	Protection against dripping water when tilted up to 15 degrees.
3	Protection against rain.
4	Protection against splashing water.
5	Protection against water jets.
6	Protection against heavy seas.
7	Protection against the effects of immersion.
8	Protection against submersion.

NEMA Definitions Pertaining to Non-hazardous Locations — NEMA Standard 250

Type 1
Enclosures are intended for indoor use, primarily to provide a degree of protection against contact with the enclosed equipment.

Type 3
Enclosures are intended for outdoor use, primarily to provide a degree of protection against windblown dust, rain, sleet and external ice formation.

Type 3R
Enclosures are intended for outdoor use, primarily to provide a degree of protection against falling rain, sleet and external ice formation.

Type 4
Enclosures are intended for indoor or outdoor use, primarily to provide a degree of protection against windblown dust and rain, splashing water and hose-directed water.

Type 4X
Enclosures are intended for indoor or outdoor use, primarily to provide a degree of protection against corrosion, windblown dust and rain, splashing water and hose-directed water.

Type 6
Enclosures are intended for indoor or outdoor use, primarily to provide a degree of protection against the entry of water during occasional temporary submersion at a limited depth.

Type 6P
Enclosures are intended for indoor or outdoor use, primarily to provide a degree of protection against the entry of water during prolonged submersion at a limited depth.

Type 12
Enclosures are intended for indoor use, primarily to provide a degree of protection against dust, falling dirt, and dripping non-corrosive liquids.

Type 13
Enclosures are intended for indoor use, primarily to provide a degree of protection against dust, spraying of water, oil and non-corrosive coolant.

NEC Definitions Pertaining to Hazardous Locations — Article 500

E51 Limit Switch Type Proximity Switches are rated for use in the following locations:

Class I Division 2, Groups A, B, C or D — Indoor Use

- For the definition of a Class I Division 2 location, see National Electrical Code Article 500-5, paragraph (b).
- For the definitions of Class I Group A, B, C, D Classifications, see the National Electrical Code Article 500-3, paragraph (a).

Class II Division 2, Groups F or G — Indoor Use

- For the definition of a Class II Division 2 location, see National Electrical Code Article 500-6, paragraph (b).
- For the definitions of Class II Group F and G Classifications, see the National Electrical Code Article 500-3, paragraph (b).

Class III Division 2 — Indoor Use

- For the definition of a Class III Division 2 location, see National Electrical Code Article 500-7, paragraph (b).
- For the definitions of Class III Classifications, see the National Electrical Code Article 500-7.



IEC, A Frame, Full Voltage Non-reversing and Reversing Starters

Product Description

Eaton's Cutler-Hammer® Intelligent Technologies (***IT.***) Electro-Mechanical line of Contactors and Starters is the result of a substantial engineering, manufacturing and marketing effort involving extensive customer input, combined with new advances in solid-state technology. ***IT.*** Electro-Mechanical products have greatly increased functionality, significantly reduced size and utilize the benefits of 24V DC control. The exclusive Pulse Width Modulation (PWM) control and digital microprocessor generate a minimized DC value which reduces energy to the contact block and provides the most compact system available.

Standards and Certifications

- Designed to meet or exceed UL, IEC and CSA
- UL Listed: UL File #E1491, Guide #NLDX — Open, UL 508
- CSA Certified: CSA File #156828, Class #3211 04 Open, C22.2 No. 14-95
- IEC: A – F Frames, IEC 60947-4-1, EN 60947-4-1
- 45 mm – 76 mm CSA Certified for Elevator Duty
- CE
- EMC IEC 61000-4
- KEMA

ISO 9002 Certification

When you turn to Eaton's Cutler-Hammer Products, you turn to quality. The International Standards Organization (ISO) has established a series of standards acknowledged by 91 industrialized nations to bring harmony to the international quest for quality. The ISO Certification process covers 20 quality system elements in design, production and installation that must conform to achieve registration. This commitment to quality will result in increased product reliability and total customer satisfaction.

Publications

Pub. 49601 ***IT.*** IEC Overload Relay 27 mm (A-Frame) Quick Setup Guide
Pub. 49602 ***IT.*** IEC Overload Relay (B – F Frames) Quick Setup Guide
Pub. 49320 ***IT.*** IEC Non-reversing Contactor 27 mm (A-Frame) Installation Guide
Pub. 49640 ***IT.*** IEC Non-reversing Contactor 45 mm (B-Frame) Installation Guide
Pub. 49650 ***IT.*** IEC Non-reversing Contactor 54 mm (C-Frame) Installation Guide
Pub. 49660 ***IT.*** IEC Non-reversing Contactor 76 mm (D-Frame) Installation Guide
Pub. 49670 ***IT.*** IEC Non-reversing Contactor 105 mm (E-Frame) Installation Guide
Pub. 49680 ***IT.*** IEC Non-reversing Contactor 140 mm (F-Frame) Installation Guide
Pub. 49321 ***IT.*** IEC Reversing Contactor 27 mm (A-Frame) Installation Guide
Pub. 49641 ***IT.*** IEC Reversing Contactor 45 mm (B-Frame) Installation Guide
Pub. 49651 ***IT.*** IEC Reversing Contactor 54 mm (C-Frame) Installation Guide
Pub. 49661 ***IT.*** IEC Reversing Contactor 76 mm (D-Frame) Installation Guide
Pub. 49671 ***IT.*** IEC Reversing Contactor 105 mm (E-Frame) Installation Guide
Pub. 49681 ***IT.*** IEC Reversing Contactor 140 mm (F-Frame) Installation Guide
Pub. 49322 ***IT.*** IEC Non-reversing Starter 27 mm (A-Frame) Installation Guide
Pub. 49642 ***IT.*** IEC Non-reversing Starter 45 mm (B-Frame) Installation Guide
Pub. 49652 ***IT.*** IEC Non-reversing Starter 54 mm (C-Frame) Installation Guide
Pub. 49662 ***IT.*** IEC Non-reversing Starter 76 mm (D-Frame) Installation Guide
Pub. 49672 ***IT.*** IEC Non-reversing Starter 105 mm (E-Frame) Installation Guide
Pub. 49682 ***IT.*** IEC Non-reversing Starter 140 mm (F-Frame) Installation Guide
Pub. 49323 ***IT.*** IEC Reversing Starter 27 mm (A-Frame) Installation Guide
Pub. 49643 ***IT.*** IEC Reversing Starter 45 mm (B-Frame) Installation Guide
Pub. 49653 ***IT.*** IEC Reversing Starter 54 mm (C-Frame) Installation Guide
Pub. 49663 ***IT.*** IEC Reversing Starter 76 mm (D-Frame) Installation Guide
Pub. 49673 ***IT.*** IEC Reversing Starter 105 mm (E-Frame) Installation Guide
Pub. 49683 ***IT.*** IEC Reversing Starter 140 mm (F-Frame) Installation Guide
Pub. 49645 ***IT.*** IEC Non-reversing Contactor Assembly Instructions (45 mm & 54 mm)
Pub. 49665 ***IT.*** IEC Non-reversing Contactor & Starter Assembly Instructions (76 mm Contactor/Starter) (45 mm & 54 mm Starter)
Pub. 49325 ***IT.*** IEC Non-reversing Starter 27 mm (A-Frame) Assembly Instructions
Pub. 49685 ***IT.*** IEC Non-reversing Starter 140 mm (F-Frame) Assembly Instructions
Pub. 49326 ***IT.*** IEC Reversing Starter 27 mm (A-Frame) Assembly Instructions
Pub. 49686 ***IT.*** IEC Reversing Contactor & Starter 140 mm (F-Frame) Assembly Instructions
Pub. 49410 ***IT.*** Front Mountable Auxiliary Contact Assembly Instructions
Pub. 49415 ***IT.*** IEC Contact Blocks (B – E Frames)
Pub. 282782 ***IT.*** Sinking Control Input Connections
Pub. 282719 ***IT.*** Overload Trip/Alarm Output (Sourcing/Sinking)

For copies of these and other publications, contact the Literature Fulfillment Center at 800-957-7050, Fax: 877-840-2371 or find on-line at: www.eaton.com.

For International, call: (630) 377-9738 (English only), Fax: (630) 377-1753.

34

Catalog Number Selection (Open Components)

Table 34-269. *IT.* Electro-Mechanical Catalog Numbering System

E 101 A 12 A 3 A

Standard

E = IEC

Configuration (Open Type)

02N = FVNR Coil Controller
03N = FVR Coil Controller
04N = Contact Block
05N = Solid-State Non-reversing Overload Relay
06N = Solid-State Reversing Overload Relay
101 = FVNR Starter
111 = FVNR Contactor
501 = FVR Starter
511 = FVR Contactor

Frame Size

A = 27 mm
B = 45 mm
C = 54 mm
D = 76 mm
E = 105 mm
F = 140 mm

Designator (IEC)

(A) **06** = 6 Amps. **09** = 9 Amps. **12** = 12 Amps.	(E) **12** = 125 Amps. **16** = 160 Amps. **20** = 200 Amps.
(B) **18** = 18 Amps. **25** = 25 Amps. **32** = 32 Amps.	(F) **25** = 250 Amps. **31** = 315 Amps. **42** = 420 Amps.
(C) **40** = 40 Amps. **50** = 50 Amps.	**XC** = Coil Controller **XR** = Overload
(D) **65** = 65 Amps. **85** = 85 Amps. **10** = 100 Amps.	

Overload Amperes Adjustment

(27 mm) **A** = .25 – .8 **B** = .59 – 1.9 **C** = 1.4 – 4.4 **D** = 2.8 – 9.0 **E** = 3.8 – 12	(76 mm) **F** = 5.0 – 16 **H** = 8.4 – 27 **K** = 14 – 45 **N** = 31 – 100
(45 mm) **A** = .25 – .8 **B** = .59 – 1.9 **C** = 1.4 – 4.4 **D** = 2.8 – 9.0 **G** = 6.3 – 20 **J** = 10 – 32	(105 mm) **K** = 14 – 45 **M** = 28 – 90 **P** = 42 – 135 **R** = 63 – 200
(54 mm) **A** = .25 – .8 **B** = .59 – 1.9 **C** = 1.4 – 4.4 **D** = 2.8 – 9.0 **F** = 5.0 – 16 **H** = 8.4 – 27 **L** = 16 – 50	(140 mm) **P** = 42 – 135 **S** = 84 – 270 **T** = 131 – 420 **X** = Contact Block, Coil Controller, Contactor or Not Applicable

Overload Type

A = Standard
(3-phase, 45 mm – 105 mm; 1- or 3-phase, 27 mm)
N = Contactor or Not Applicable

Pole Selection

3 = 3-Pole

Note: When using the Catalog Numbering System for Eaton's Cutler-Hammer *IT.* Electro-Mechanical products, care should be exercised to assure that the Catalog Number for the Overload Relay aligns with the *IT.* Contact Block selected for type, frame size and ampacity, if purchased as separate components. **Example:** Select an **E05N_XR_3A** *IT.* Overload Relay for an IEC non-reversing application or an **E06N_XR_3A** for an IEC reversing application.

Examples:

E02NCXCXNN — FVNR Coil Controller, 54 mm
E04NB18X3N — Contact Block, 45 mm, 18 Amps
E05NCXRL3A — Solid-State Non-reversing Overload Relay, 16 – 50 Amps
E101B32J3A — FVNR B-Frame Starter, 32 Amps, with Solid-State Overload, 10 – 32 Amps
E111F25X3N — FVNR F-Frame Contactor, 250 Amps
E501D10K3A — FVR D-Frame Starter, 100 Amps, with Solid-State Overload, 14 – 45 Amps
E511B18X3N — FVR B-Frame Contactor, 18 Amps

34

Contents

Description	*Page*
Product Family Overview	
Product Description	**34-228**
Standards and Certifications	**34-228**
Publications	**34-228**
Catalog Number Selection	**34-229**
Contactors — Non-reversing and Reversing	
Product Description	**34-230**
Application Description	**34-230**
Features	**34-230**
Product Selection	**34-231**
Technical Data and Specifications	**34-240**
Accessories	**34-244**
Auxiliary Contacts	**34-246**
Renewal Parts	**34-248**
Wiring Diagrams	**34-249**
Dimensions	**34-250**



IEC Full Voltage Non-reversing Contactor, C-Frame
Cat. No. E111C50X3N



IEC Full Voltage Reversing Contactor, D-Frame
Cat. No. E511D10X3N

Product Description

The Cutler-Hammer® Intelligent Technologies (***IT.***) Electro-Mechanical Contactor from Eaton's electrical business consists of an ***IT.*** Electro-Mechanical Contact Block and ***IT.*** Electro-Mechanical Coil Controller as a Full Voltage Non-reversing (FVNR) or Full Voltage Reversing (FVR) device. B-Frame (45 mm) to E-Frame (105 mm) Contact Blocks combined with Coil Controllers (factory or field assembled) are stand-alone Contactors. Only the A-Frame (27 mm) and F-Frame (140 mm) Contactors have internal factory assembled coil controllers.

Also available are the ***IT.*** Manual and Combination Motor Controllers which combine a Manual Motor Protector, Wiring Connector Link and ***IT.*** Contactor. See **Tab 38** for more information.

Application Description

When selecting an IEC Contactor, the user must consider the specific load, utilization category and required electrical life. Actual application life may vary depending on environmental conditions and duty cycle.

Features

- 115V AC – 600V AC, 1/4 – 350 hp/ 3/4 – 250 kW, 50/60 Hz
- 24V DC Coil Control — safe, reliable global standard
- Most compact DC operated contactors available — e.g., A-Frame 27 mm wide, 7-1/2 hp @ 12A, 460V
- Frame sizes (mm): 27, 45, 54, 76, 105, 140
- No laminations, shading coils or magnet noise
- -40 to 149°F (-40 to 65°C) operating temperature
- No seal in auxiliary contacts required — control wiring is not needed between the contactor and overload relay
- Unique Pulse Width Modulated (PWM) coil controller minimizes energy and coil power consumption
- Conformal coated PWM board (coil controller) for environmental toughness
- Microprocessor-based control
- 95% humidity non-condensing (99% consult factory)
- Easily accessible mounting feet for panel mounting
- High immunity to ESD, harmonics — minimal Total Harmonic Distortion
- Front and side mounted Auxiliary Contacts: 1NO, 1NC, 2NO, 2NC, 1NO/1NC and logic level
- Built-in logic to provide either 2- or 3-wire control, eliminating the need to provide and wire auxiliary contacts to seal in and interlock the contactor coils
- Easy field assembly of control wiring — plug and unplug lockable control connector
- DIN rail mounting, 6 – 100A (A – D Frames)
- Common accessories
- Long-life silver nickel (A – B Frames) and silver tin oxide (C – F Frames) contacts provide excellent conductivity and superior resistance to welding and arc erosion
- Environmentally friendly materials
- IP20 Finger Protection
- Low wattage coils and minimal heat dissipation

Reversing Contactors

- Includes Reversing Power Wiring and bus bars
- Mounting plates for B-Frame (45 mm) to E-Frame (105 mm)
- Exclusive internal electronic interlock for reversing
- Unique coil controller energizes both forward and reverse contactors — one control point for wiring

Product Selection

When Ordering

Select required contactor by amp rating, frame size, kW/hp, voltage and non-reversing or reversing.

Non-reversing Contactors

Note:

- An **E111** (45 – 105 mm) consists of an **E04N** (Contact Block) and an **E02N** (FVNR Coil Controller), factory assembled.
- An **E111** (27 and 140 mm) has an internal coil controller, factory assembled.



IEC A-Frame FVNR Contactor
Cat. No. E111A12X3N



IEC B-Frame FVNR Contactor
Cat. No. E111B32X3N

Table 34-270. 3-Pole DC-Operated Full Voltage Non-reversing Contactors ① (A – F Frames)

Max. AC-3 Amp. Rating 480V AC (Ie)	IEC 60947-4-1 AC-1 Thermal Current 480V AC and (I_{th})	Frame Size ②	Maximum kW Rating @ Ue (V) 50/60 Hz						Maximum UL Horsepower (hp) 50/60 Hz							3-Pole Open Type	
			3-Phase						1-Phase		3-Phase						
			220V/ 240V	380V	400V/ 415V	440V/ 460V	500V	550V/ 575V	115V/ 120V	220V/ 230V	200V/ 208V	230V/ 240V	380V/ 415V	460V/ 480V	575V/ 600V	Catalog Number	Price U.S. $
6	12	A	1.1	2.2	2.2	3	3	3	1/4	1/2	1	1-1/2	3	3	3	**E111A06X3N**	
9	16	A	2.2	4	4	4	4	4	1/3	1	2	2	3	5	5	**E111A09X3N**	
12	20	A	3	5.5	5.5	6.5	6.5	6.5	1/2	2	3	3	5	7-1/2	7-1/2	**E111A12X3N**	
18	25	B	4	7.5	9	9	10	11	1	3	5	5	10	10	10	**E111B18X3N**	
25	40	B	5.5	12.5	12.5	13	15	15	2	3	5	7-1/2	10	15	15	**E111B25X3N**	
32	50	B	9	15	15	18.5	18.5	18.5	2	5	7-1/2	10	15	20	20	**E111B32X3N**	
40	63	C	11	18.5	22	22	22	25	3	7-1/2	10	10	20	25	25	**E111C40X3N**	
50	85	C	12.5	22	25	30	30	33	3	10	15	15	25	30	30	**E111C50X3N**	
65	100	D	18.5	30	33	40	40	45	5	10	20	20	40	50	50	**E111D65X3N**	
85	115	D	25	45	45	51	51	55	7-1/2	15	25	30	50	60	60	**E111D85X3N**	
100	130	D	25	51	55	59	59	63	10	20	30	30	50	75	75	**E111D10X3N**	
125	200	E	33	63	63	80	80	80	10	25	40	40	60	100	100	**E111E12X3N**	
160	225	E	45	80	80	100	100	100	15	30	50	60	75	125	125	**E111E16X3N**	
200	250	E	59	100	110	110	110	132	—	40	60	75	100	150	150	**E111E20X3N**	
250	300	F	75	132	140	160	160	160	—	50	75	100	150	200	200	**E111F25X3N**	
315	375	F	90	160	160	200	200	200	—	—	100	125	150	250	250	**E111F31X3N**	
420	450	F	110	220	220	257	257	257	—	—	150	150	200	350	350	**E111F42X3N**	

① 24V DC coil voltage.

② **Frame Size**

A = 27 mm
B = 45 mm
C = 54 mm
D = 76 mm
E = 105 mm
F = 140 mm

Note:

- If required, accessories are available starting on **Page 34-244**.
- Integral solid-state auxiliary hold-in circuit.
- 3 main contacts.
- See **Table 34-279** for 24V DC power supply requirements.
- Control inputs (P, F) are rated 24V DC (3 – 5 mA).

Accessories ..... **Pages 34-244 – 34-247**
Technical Data ..... **Pages 34-240 – 34-243**
Dimensions ..... **Pages 34-250 – 34-252**
Discount Symbol **1CD7**

Reversing Contactors

Note:

- An **E511** (45 – 105 mm) consists of two **E04N** (Contact Blocks), an **E03N** (FVR Coil Controller), Mechanical Interlock, Fanning Strips and Mounting Plate, factory assembled.
- An **E511F** (140 mm) consists of two **E111F** (Contactors), Mechanical Interlock, Crossover Bus Bars and Wiring Harness, factory assembled.
- An **E511A** (27 mm) Contactor is factory assembled only.



IEC B-Frame FVR Contactor
Cat. No. E511B32X3N

Table 34-271. 3-Pole DC-Operated Full Voltage Reversing Contactors ① (A – F Frames)

Max. AC-3 Amp. Rating 480V AC (Ie)	IEC 60947-4-1 AC-1 Thermal Current 480V AC and (I_{th})	Frame Size ②	Maximum kW Rating @ Ue (V) 50/60 Hz						Maximum UL Horsepower (hp) 50/60 Hz							3-Pole Open Type	
			3-Phase						1-Phase		3-Phase						
			220V/ 240V	380V	400V/ 415V	440V/ 460V	500V	550V/ 575V	115V/ 120V	220V/ 230V	200V/ 208V	230V/ 240V	380V/ 415V	460V/ 480V	575V/ 600V	Catalog Number	Price U.S. $
6	12	A	1.1	2.2	2.2	3	3	3	1/4	1/2	1	1-1/2	3	3	3	**E511A06X3N**	
9	16	A	2.2	4	4	4	4	4	1/3	1	2	2	3	5	5	**E511A09X3N**	
12	20	A	3	5.5	5.5	6.5	6.5	6.5	1/2	2	3	3	5	7-1/2	7-1/2	**E511A12X3N**	
18	25	B	4	7.5	9	9	10	11	1	3	5	5	10	10	10	**E511B18X3N**	
25	40	B	5.5	12.5	12.5	13	15	15	2	3	5	7-1/2	10	15	15	**E511B25X3N**	
32	50	B	9	15	15	18.5	18.5	18.5	2	5	7-1/2	10	15	20	20	**E511B32X3N**	
40	63	C	11	18.5	22	22	22	25	3	7-1/2	10	10	20	25	25	**E511C40X3N**	
50	85	C	12.5	22	25	30	30	33	3	10	15	15	25	30	30	**E511C50X3N**	
65	100	D	18.5	30	33	40	40	45	5	10	20	20	40	50	50	**E511D65X3N**	
85	115	D	25	45	45	51	51	55	7-1/2	15	25	30	50	60	60	**E511D85X3N**	
100	130	D	25	51	55	59	59	63	10	20	30	30	50	75	75	**E511D10X3N**	
125	200	E	33	63	63	80	80	80	10	25	40	40	60	100	100	**E511E12X3N**	
160	225	E	45	80	80	100	100	100	15	30	50	60	75	125	125	**E511E16X3N**	
200	250	E	59	100	110	110	110	132	—	40	60	75	100	150	150	**E511E20X3N**	
250	300	F	75	132	140	160	160	160	—	50	75	100	150	200	200	**E511F25X3N**	
315	375	F	90	160	160	200	200	200	—	—	100	125	150	250	250	**E511F31X3N**	
420	450	F	110	220	220	257	257	257	—	—	150	150	200	350	350	**E511F42X3N**	

① 24V DC coil voltage.

② **Frame Size**

A = 27 mm
B = 45 mm
C = 54 mm
D = 76 mm
E = 105 mm
F = 140 mm

Note:

- If required, accessories are available starting on **Page 34-244**.
- Integral solid-state auxiliary hold-in circuit.
- 3 main contacts.
- See **Table 34-279** for 24V DC power supply requirements.
- Control inputs (P, F, R) are rated 24V DC (3 – 5 mA).

Accessories ..... **Pages 34-244 – 34-247**
Technical Data ..... **Pages 34-240 – 34-243**
Dimensions ..... **Pages 34-250 – 34-252**
Discount Symbol **1CD7**

Contents

Description	*Page*
Product Family Overview	
Product Description	**34-228**
Standards and Certifications	**34-228**
Publications	**34-228**
Catalog Number Selection	**34-229**
Starters — Non-reversing and Reversing	
Product Description	**34-233**
Features	**34-233**
Product Selection	**34-234**
Technical Data and Specifications	**34-240**
Accessories	**34-244**
Auxiliary Contacts	**34-246**
Renewal Parts	**34-248**
Wiring Diagrams	**34-249**
Dimensions	**34-250**



IEC FVNR Starter, C Frame Cat. No. E101C50L3A

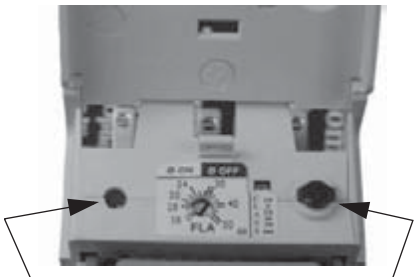

Overload Relay with Cover Open — FLA/Trip Class/ Phase Protection Dial

TEST Button ***RESET Button***



Overload Relay with Cover Closed (front view)



IEC Full Voltage Reversing Starter, E Frame Cat. No. E501E20R3A

Product Description

The Cutler-Hammer® Intelligent Technologies (***IT.***) Electro-Mechanical Starter from Eaton's electrical business consists of an ***IT.*** Electro-Mechanical Contact Block or Contactor and ***IT.*** Electro-Mechanical Solid-State Overload Relay as a Full Voltage Non-reversing (FVNR) or Full Voltage Reversing (FVR) device. A-Frame (27 mm) to F-Frame (140 mm) Starters are factory or field assembled.

Features

- 115V AC – 600V AC, 1/4 – 350 hp/ .75 – 250 kW, .25A – 420A Overload Amperes range, 50/60 Hz
- 24V DC coil control power — safe, reliable, global standard
- Unique Pulse Width Modulated (PWM) coil controller minimizes energy and coil power consumption
- Microprocessor based control
- Phase loss and current unbalance protection, user selectable
- Standard user-selectable Trip Class 10 (factory default), 20 or 30 — no individual part numbers — no programming software
- Ambient compensated
- Motor temperature and power-up protection with thermal memory
- Easily accessible mounting feet for panel mounting
- For use on the load side of an Adjustable Frequency Drive, consult the factory.
- LED status indication — trip, trip class, motor thermal state, reset, overload state
- Unique "Alarm without Trip" option for critical must run applications
- Lockable overload cover protects against unauthorized adjustment and reset functions
- No control wiring needed between contactor and overload relay — eliminates seal in auxiliary contacts
- Minimal heat — no full voltage coils
- -40° to 149°F (-40° to 65°C) operating temperature
- Wide 3.2:1 current adjustment range
- Exclusive internal 24-bit floating point math calculations with RMS calibrated current measurement
- High immunity to ESD, harmonics — minimal Total Harmonic Distortion
- IP20 Finger Protection
- Motor running thermal utilization indication
- Manual, Automatic or Remote Reset
- Easy field assembly of control wiring — plug and unplug lockable control connector
- DIN rail mounting, 6A – 100A (A – D Frames)
- Communication Interface with Starter Network Adapter Product (SNAP)
- 2- or 3-wire control
- Solid-state alarm output indication
- Front and side mounted Auxiliary Contacts: 1NO, 1NC, 2NO, 2NC, 1NO/1NC, logic level (1NO/1NC)
- Type 2 Coordination
- Conformal coated PWM overload board for environmental toughness

Reversing Starters

- Includes Reversing Power Wiring and bus bars
- Mounting plates for B-Frame (45 mm) to E-Frame (105 mm)
- Built-in electronic interlock for FVR units
- Unique overload board energizes both forward and reverse starters — one control point for wiring

Product Selection

When Ordering

Select required Starter by kW/hp rating, voltage, phase and overload adjustment range (amperes).



IEC A-Frame, Full Voltage Non-reversing Starter



IEC B-Frame, Full Voltage Non-reversing Starter

Non-reversing Starters

Table 34-272. Full Voltage Non-reversing DC-Operated, Open Type Starters (A – B Frames), with 3-Pole Solid-State Overload Protection

Max. AC-3 Amp. Rating 480V AC (Ie)	Overload Adjustment Range (Amperes)	Maximum kW Rating @ Ue (V) 50/60 Hz						Maximum UL Horsepower (hp) Rating 50/60 Hz							Catalog Number	Price U.S. $
		3-Phase						1-Phase		3-Phase						
		220V/ 240V	380V	400V/ 415V	460V	500V	550V/ 575V	115V/ 120V	220V/ 230V	200V/ 208V	230V/ 240V	380V/ 415V	460V/ 480V	575V/ 600V		
A-Frame 27 mm																
6	.25 – .8 .59 – 1.9 1.4 – 4.4 2.8 – 9.0 3.8 – 12	1.1	2.2	2.2	3	3	3	1/4	1/2	1	1-1/2	3	3	3	**E101A06A3A** **E101A06B3A** **E101A06C3A** **E101A06D3A** **E101A06E3A**	
9	.25 – .8 .59 – 1.9 1.4 – 4.4 2.8 – 9.0 3.8 – 12	2.2	4	4	4	4	4	1/3	1	2	2	3	5	5	**E101A09A3A** **E101A09B3A** **E101A09C3A** **E101A09D3A** **E101A09E3A**	
12	.25 – .8 .59 – 1.9 1.4 – 4.4 2.8 – 9.0 3.8 – 12	3	5.5	5.5	6.5	6.5	6.5	1/2	2	3	3	5	7-1/2	7-1/2	**E101A12A3A** **E101A12B3A** **E101A12C3A** **E101A12D3A** **E101A12E3A**	
B-Frame 45 mm																
18	.25 – .8 .59 – 1.9 1.4 – 4.4 2.8 – 9.0 6.3 – 20 10 – 32	4	7.5	9	9	10	11	—	—	5	5	10	10	10	**E101B18A3A** **E101B18B3A** **E101B18C3A** **E101B18D3A** **E101B18G3A** **E101B18J3A**	
25	.25 – .8 .59 – 1.9 1.4 – 4.4 2.8 – 9.0 6.3 – 20 10 – 32	5.5	12.5	12.5	13	15	15	—	—	5	7-1/2	10	15	15	**E101B25A3A** **E101B25B3A** **E101B25C3A** **E101B25D3A** **E101B25G3A** **E101B25J3A**	
32	.25 – .8 .59 – 1.9 1.4 – 4.4 2.8 – 9.0 6.3 – 20 10 – 32	9	15	15	18.5	18.5	18.5	—	—	7-1/2	10	15	20	20	**E101B32A3A** **E101B32B3A** **E101B32C3A** **E101B32D3A** **E101B32G3A** **E101B32J3A**	

Note:

- If required, accessories are available starting on **Page 34-244**.
- A-Frame 27 mm ***IT.*** Starter is for 1 – or 3-phase applications.
- The standard B – F-Frame (45 mm to 140 mm) ***IT.*** Starters are for 3-phase applications.
- Class 10 (factory default), 20 and 30 Trip Times see **Figure 34-150** on **Page 34-243**.
- An **E101** (27 – 105 mm) consists of an **E04N** (Contact Block) or **E111A** (Contactor) and an **E05N** (Non-reversing Overload Relay), factory assembled. An **E101F** (140 mm) consists of an **E111** (Contactor) and an **E05N** (Non-reversing Overload Relay), factory assembled.
- See **Table 34-279** for 24V DC power supply requirements.
- Control inputs (P, F, 1) are rated 24V DC (3 – 5 mA).

Accessories ..... **Pages 34-244 – 34-247**
Technical Data ..... **Pages 34-240 – 34-243**
Dimensions ..... **Pages 34-253 – 34-255**
Discount Symbol **1CD7**



IEC C-Frame
FVNR Starter

Non-reversing Starters, continued

Table 34-273. Full Voltage Non-reversing DC-Operated, Open Type Starters (C – D Frames), with 3-Pole Solid-State Overload Protection

Max. AC-3 Amp. Rating 480V AC (Ie)	Overload Adjustment Range (Amperes)	Maximum kW Rating @ Ue (V) 50/60 Hz						Maximum UL Horsepower (hp) Rating 50/60 Hz							Catalog Number	Price U.S. $
		3-Phase						1-Phase		3-Phase						
		220V/ 240V	380V	400V/ 415V	460V	500V	550V/ 575V	115V/ 120V	220V/ 230V	200V/ 208V	230V/ 240V	380V/ 415V	460V/ 480V	575V/ 600V		
C-Frame 54 mm																
40	.25 – .8 .59 – 1.9 1.4 – 4.4 2.8 – 9.0 5.0 – 16 8.4 – 27 16 – 50	11	18.5	22	22	22	25	—	—	10	10	20	25	25	**E101C40A3A** **E101C40B3A** **E101C40C3A** **E101C40D3A** **E101C40F3A** **E101C40H3A** **E101C40L3A**	
50	.25 – .8 .59 – 1.9 1.4 – 4.4 2.8 – 9.0 5.0 – 16 8.4 – 27 16 – 50	12.5	22	25	30	30	33	—	—	15	15	25	30	30	**E101C50A3A** **E101C50B3A** **E101C50C3A** **E101C50D3A** **E101C50F3A** **E101C50H3A** **E101C50L3A**	
D-Frame 76 mm																
65	5.0 – 16 8.4 – 27 14 – 45 31 – 100	18.5	30	33	40	40	45	—	—	20	20	40	50	50	**E101D65F3A** **E101D65H3A** **E101D65K3A** **E101D65N3A**	
85	5.0 – 16 8.4 – 27 14 – 45 31 – 100	25	45	45	51	51	55	—	—	25	30	50	60	60	**E101D85F3A** **E101D85H3A** **E101D85K3A** **E101D85N3A**	
100	5.0 – 16 8.4 – 27 14 – 45 31 – 100	25	51	55	59	59	63	—	—	30	30	50	75	75	**E101D10F3A** **E101D10H3A** **E101D10K3A** **E101D10N3A**	

Note:

- If required, accessories are available starting on **Page 34-244**.
- A-Frame 27 mm ***IT.*** Starter is for 1 – or 3-phase applications.
- The standard B – F-Frame (45 mm to 140 mm) ***IT.*** Starters are for 3-phase applications.
- Class 10 (factory default), 20 and 30 Trip Times see **Figure 34-150** on **Page 34-243**.
- An **E101** (27 – 105 mm) consists of an **E04N** (Contact Block) or **E111A** (Contactor) and an **E05N** (Non-reversing Overload Relay), factory assembled. An **E101F** (140 mm) consists of an **E111** (Contactor) and an **E05N** (Non-reversing Overload Relay), factory assembled.
- See **Table 34-279** for 24V DC power supply requirements.
- Control inputs (P, F, 1) are rated 24V DC (3 – 5 mA).

Accessories ..... **Pages 34-244 – 34-247**
Technical Data ..... **Pages 34-240 – 34-243**
Dimensions ..... **Pages 34-253 – 34-255**
Discount Symbol **1CD7**



IEC F- and E-Frame (105 mm and 140 mm)
Full Voltage Non-reversing Starters

Non-reversing Starters, continued

Table 34-274. Full Voltage Non-reversing DC-Operated, Open Type Starters (E – F Frames) with 3-Pole Solid-State Overload Protection

Max. AC-3 Amp. Rating 480V AC (Ie)	Overload Adjustment Range (Amperes)	Maximum kW Rating @ Ue (V) 50/60 Hz						Maximum UL Horsepower (hp) Rating 50/60 Hz							Catalog Number	Price U.S. $
		3-Phase						1-Phase		3-Phase						
		220V/ 240V	380V	400V/ 415V	460V	500V	550V/ 575V	115V/ 120V	220V/ 230V	200V/ 208V	230V/ 240V	380V/ 415V	460V/ 480V	575V/ 600V		
E-Frame 105 mm																
125	14 – 45 28 – 90 42 – 135 63 – 200	33	63	63	80	80	80	—	—	40	40	60	100	100	**E101E12K3A** **E101E12M3A** **E101E12P3A** **E101E12R3A**	
160	14 – 45 28 – 90 42 – 135 63 – 200	45	80	80	100	100	100	—	—	50	60	75	125	125	**E101E16K3A** **E101E16M3A** **E101E16P3A** **E101E16R3A**	
200	14 – 45 28 – 90 42 – 135 63 – 200	59	100	110	110	110	132	—	—	60	75	100	150	150	**E101E20K3A** **E101E20M3A** **E101E20P3A** **E101E20R3A**	
F-Frame 140 mm																
250	42 – 135 84 – 270 131 – 420	75	132	140	160	160	160	—	—	75	100	150	200	200	**E101F25P3A** **E101F25S3A** **E101F25T3A**	
315	42 – 135 84 – 270 131 – 420	90	160	160	200	200	200	—	—	100	125	150	250	250	**E101F31P3A** **E101F31S3A** **E101F31T3A**	
420	42 – 135 84 – 270 131 – 420	110	220	220	257	257	257	—	—	150	150	200	350	350	**E101F42P3A** **E101F42S3A** **E101F42T3A**	

Note:

- If required, accessories are available starting on **Page 34-244**.
- A-Frame 27 mm *IT.* Starter is for 1 – or 3-phase applications.
- The standard B – F-Frame (45 mm to 140 mm) *IT.* Starters are for 3-phase applications.
- Class 10 (factory default), 20 and 30 Trip Times see **Figure 34-150** on **Page 34-243**.
- An **E101** (27 – 105 mm) consists of an **E04N** (Contact Block) or **E111A** (Contactor) and an **E05N** (Non-reversing Overload Relay), factory assembled. An **E101F** (140 mm) consists of an **E111** (Contactor) and an **E05N** (Non-reversing Overload Relay), factory assembled.
- See **Table 34-279** for 24V DC power supply requirements.
- Control inputs (P, F, 1) are rated 24V DC (3 – 5 mA).

Accessories ..... **Pages 34-244 – 34-247**
Technical Data ..... **Pages 34-240 – 34-243**
Dimensions ..... **Pages 34-253 – 34-255**
Discount Symbol **1CD7**



IEC A-Frame
Reversing Starter

Reversing Starters

Table 34-275. Full Voltage Reversing DC-Operated, Open Type Starters (A – B Frames) with 3-Pole Solid-State Overload Protection ①

Max. AC-3 Amp. Rating 480V AC (Ie)	Overload Adjustment Range (Amperes)	Maximum kW Rating @ Ue (V) 50/60 Hz						Maximum UL Horsepower (hp) Rating 50/60 Hz							Catalog Number	Price U.S. $
		3-Phase						1-Phase		3-Phase						
		220V/ 240V	380V	400V/ 415V	440V/ 460V	500V	550V/ 575V	115V/ 120V	220V/ 230V	200V/ 208V	230V/ 240V	380V/ 415V	460V/ 480V	575V/ 600V		
A-Frame 27 mm																
6	.25 – .8 .59 – 1.9 1.4 – 4.4 2.8 – 9.0 3.8 – 12	1.1	2.2	2.2	3	3	3	1/4	1/2	1	1-1/2	3	3	3	**E501A06A3A** **E501A06B3A** **E501A06C3A** **E501A06D3A** **E501A06E3A**	
9	.25 – .8 .59 – 1.9 1.4 – 4.4 2.8 – 9.0 3.8 – 12	2.2	4	4	4	4	4	1/3	1	2	2	3	5	5	**E501A09A3A** **E501A09B3A** **E501A09C3A** **E501A09D3A** **E501A09E3A**	
12	.25 – .8 .59 – 1.9 1.4 – 4.4 2.8 – 9.0 3.8 – 12	3	5.5	5.5	6.5	6.5	6.5	1/2	2	3	3	5	7-1/2	7-1/2	**E501A12A3A** **E501A12B3A** **E501A12C3A** **E501A12D3A** **E501A12E3A**	
B-Frame 45 mm																
18	.25 – .8 .59 – 1.9 1.4 – 4.4 2.8 – 9.0 6.3 – 20 10 – 32	4	7.5	9	9	10	11	—	—	5	5	10	10	10	**E501B18A3A** **E501B18B3A** **E501B18C3A** **E501B18D3A** **E501B18G3A** **E501B18J3A**	
25	.25 – .8 .59 – 1.9 1.4 – 4.4 2.8 – 9.0 6.3 – 20 10 – 32	5.5	12.5	12.5	13	15	15	—	—	5	7-1/2	10	15	15	**E501B25A3A** **E501B25B3A** **E501B25C3A** **E501B25D3A** **E501B25G3A** **E501B25J3A**	
32	.25 – .8 .59 – 1.9 1.4 – 4.4 2.8 – 9.0 6.3 – 20 10 – 32	9	15	15	18.5	18.5	18.5	—	—	7-1/2	10	15	20	20	**E501B32A3A** **E501B32B3A** **E501B32C3A** **E501B32D3A** **E501B32G3A** **E501B32J3A**	

① 24V DC coil voltage.

Note:

- If required, accessories are available starting on **Page 34-244**.
- A-Frame 27 mm ***IT.*** Starter is for 1 – or 3-phase applications.
- The standard B – F-Frame (45 mm to 140 mm) ***IT.*** Starters are for 3-phase applications.
- An **E501** (45 – 105 mm) consists of two **E04N** (Contact Blocks), an **E06N** (Reversing Overload Relay), Fanning Strips, Mechanical Interlock and Mounting Plate. An **E501F** (140 mm) consists of two **E111F** (Contactors), an **E06NF** (Reversing Overload Relay), Mechanical Interlock, Crossover Bus Bars and Reversing Wiring Harness.
- An **E501A** (27 mm) consists of an **E511A** (Contactor) and **E06NA** (Reversing Overload Relay).
- See **Table 34-279** for 24V DC power supply requirements.
- Control inputs (P, F, R, 1) are rated 24V DC (3 – 5 mA).

Accessories ..... **Pages 34-244 – 34-247**
Technical Data ..... **Pages 34-240 – 34-243**
Dimensions ..... **Pages 34-253 – 34-255**
Discount Symbol **1CD7**



IEC C-Frame
Reversing Starter

Reversing Starters, continued

Table 34-276. Full Voltage Reversing DC-Operated, Open Type Starters (C – D Frames) with 3-Pole Solid-State Overload Protection ①

Max. AC-3 Amp. Rating 480V AC (Ie)	Overload Adjustment Range (Amperes)	Maximum kW Rating @ Ue (V) 50/60 Hz						Maximum UL Horsepower (hp) Rating 50/60 Hz							Catalog Number	Price U.S. $
		3-Phase						1-Phase		3-Phase						
		220V/ 240V	380V	400V/ 415V	440V/ 460V	500V	550V/ 575V	115V/ 120V	220V/ 230V	200V/ 208V	230V/ 240V	380V/ 415V	460V/ 480V	575V/ 600V		
C-Frame 54 mm																
40	.25 – .8 .59 – 1.9 1.4 – 4.4 2.8 – 9.0 5.0 – 16 8.4 – 27 16 – 50	11	18.5	22	22	22	25	—	—	10	10	20	25	25	**E501C40A3A** **E501C40B3A** **E501C40C3A** **E501C40D3A** **E501C40F3A** **E501C40H3A** **E501C40L3A**	
50	.25 – .8 .59 – 1.9 1.4 – 4.4 2.8 – 9.0 5.0 – 16 8.4 – 27 16 – 50	12.5	22	25	30	30	33	—	—	15	15	25	30	30	**E501C50A3A** **E501C50B3A** **E501C50C3A** **E501C50D3A** **E501C50F3A** **E501C50H3A** **E501C50L3A**	
D-Frame 76 mm																
65	5.0 – 16 8.4 – 27 14 – 45 31 – 100	18.5	30	33	40	40	45	—	—	20	20	40	50	50	**E501D65F3A** **E501D65H3A** **E501D65K3A** **E501D65N3A**	
85	5.0 – 16 8.4 – 27 14 – 45 31 – 100	25	45	45	51	51	55	—	—	25	30	50	60	60	**E501D85F3A** **E501D85H3A** **E501D85K3A** **E501D85N3A**	
100	5.0 – 16 8.4 – 27 14 – 45 31 – 100	25	51	55	59	59	63	—	—	30	30	50	75	75	**E501D10F3A** **E501D10H3A** **E501D10K3A** **E501D10N3A**	

① 24V DC coil voltage.

Note:

- If required, accessories are available starting on **Page 34-244**.
- A-Frame 27 mm ***IT.*** Starter is for 1 – or 3-phase applications.
- The standard B – F-Frame (45 mm to 140 mm) ***IT.*** Starters are for 3-phase applications.
- An **E501** (45 – 105 mm) consists of two **E04N** (Contact Blocks), an **E06N** (Reversing Overload Relay), Fanning Strips, Mechanical Interlock and Mounting Plate. An **E501F** (140 mm) consists of two **E111F** (Contactors), an **E06NF** (Reversing Overload Relay), Mechanical Interlock, Crossover Bus Bars and Reversing Wiring Harness.
- An **E501A** (27 mm) consists of an **E511A** (Contactor) and **E06NA** (Reversing Overload Relay).
- See **Table 34-279** for 24V DC power supply requirements.
- Control inputs (P, F, R, 1) are rated 24V DC (3 – 5 mA).

Accessories ..... **Pages 34-244 – 34-247**
Technical Data ..... **Pages 34-240 – 34-243**
Dimensions ..... **Pages 34-253 – 34-255**
Discount Symbol **1CD7**



IEC E-Frame FVR Starter
Cat. No. E501E20P3A



IEC F-Frame
Reversing Starter

Reversing Starters, continued

Table 34-277. Full Voltage Reversing DC-Operated, Open Type Starters (E – F Frames) with 3-Pole Solid-State Overload Protection ①

Max. AC-3 Amp. Rating 480V AC (Ie)	Overload Adjustment Range (Amperes)	Maximum kW Rating @ Ue (V) 50/60 Hz						Maximum UL Horsepower (hp) Rating 50/60 Hz							Catalog Number	Price U.S. $
		3-Phase						1-Phase		3-Phase						
		220V/ 240V	380V	400V/ 415V	440V/ 460V	500V	550V/ 575V	115V/ 120V	220V/ 230V	200V/ 208V	230V/ 240V	380V/ 415V	460V/ 480V	575V/ 600V		
E-Frame 105 mm																
125	14 – 45 28 – 90 42 – 135 63 – 200	33	63	63	80	80	80	—	—	40	40	60	100	100	**E501E12K3A** **E501E12M3A** **E501E12P3A** **E501E12R3A**	
160	14 – 45 28 – 90 42 – 135 63 – 200	45	80	80	100	100	100	—	—	50	60	75	125	125	**E501E16K3A** **E501E16M3A** **E501E16P3A** **E501E16R3A**	
200	14 – 45 28 – 90 42 – 135 63 – 200	59	100	110	110	110	132	—	—	60	75	100	150	150	**E501E20K3A** **E501E20M3A** **E501E20P3A** **E501E20R3A**	
F-Frame 140 mm																
250	42 – 135 84 – 270 131 – 420	75	132	140	160	160	160	—	—	75	100	150	200	200	**E501F25P3A** **E501F25S3A** **E501F25T3A**	
315	42 – 135 84 – 270 131 – 420	90	160	160	200	200	200	—	—	100	125	150	250	250	**E501F31P3A** **E501F31S3A** **E501F31T3A**	
420	42 – 135 84 – 270 131 – 420	110	220	220	257	257	257	—	—	150	150	200	350	350	**E501F42P3A** **E501F42S3A** **E501F42T3A**	

① 24V DC coil voltage.

Note:

- If required, accessories are available on **Page 34-244**.
- A-Frame 27 mm *IT.* Starter is for 1 – or 3-phase applications.
- The standard B – F-Frame (45 mm to 140 mm) *IT.* Starters are for 3-phase applications.
- An **E501** (45 – 105 mm) consists of two **E04N** (Contact Blocks), an **E06N** (Reversing Overload Relay), Fanning Strips, Mechanical Interlock and Mounting Plate. An **E501F** (140 mm) consists of two **E111F** (Contactors), an **E06NF** (Reversing Overload Relay), Mechanical Interlock, Crossover Bus Bars and Reversing Wiring Harness.
- An **E501A** (27 mm) consists of an **E511A** (Contactor) and **E06NA** (Reversing Overload Relay).
- See **Table 34-279** for 24V DC power supply requirements.
- Control inputs (P, F, R 1) are rated 24V DC (3 – 5 mA).

Accessories ..... **Pages 34-244 – 34-247**
Technical Data ..... **Pages 34-240 – 34-243**
Dimensions ..... **Pages 34-253 – 34-255**
Discount Symbol **1CD7**

Table 34-278. Specifications

Description	A-Frame 27 mm	B-Frame 45 mm	C-Frame 54 mm	D-Frame 76 mm	E-Frame 105 mm	F-Frame 140 mm
Overall Dimensions in Inches (mm) ① — *w* x *h* x *d*						
Non-reversing Contactor	1.1 x 3.0 x 2.4 (27 x 75 x 60)	1.8 x 4.4 x 2.4 (45 x 111 x 60)	2.1 x 4.4 x 2.4 (54 x 113 x 60)	3.0 x 5.9 x 3.1 (76 x 150 x 79)	4.1 x 8.0 x 3.5 (105 x 203 x 90)	5.6 x 14.0 x 7.0 (142 x 356 x 178)
Reversing Contactor	2.4 x 2.9 x 2.4 (60 x 73 x 60)	3.8 x 5.9 x 2.7 (96 x 149 x 69)	4.5 x 5.9 x 2.6 (114 x 149 x 67)	6.2 x 7.4 x 3.3 (158 x 188 x 84)	8.5 x 9.5 x 3.8 (216 x 242 x 97)	11.7 x 17.2 x 7.0 (297 x 437 x 178)
Non-reversing Starter	1.2 x 4.0 x 3.1 (31 x 102 x 79)	1.8 x 5.0 x 2.5 (45 x 127 x 63)	2.1 x 5.4 x 2.5 (54 x 138 x 63)	3.0 x 5.9 x 3.1 (76 x 150 x 79)	4.1 x 8.0 x 3.5 (105 x 203 x 90)	5.7 x 19.4 x 7.0 (145 x 493 x 178)
Reversing Starter	2.5 x 4.0 x 3.1 (64 x 102 x 79)	3.8 x 5.9 x 2.7 (96 x 149 x 69)	4.5 x 5.9 x 2.6 (114 x 149 x 67)	6.2 x 7.4 x 3.3 (158 x 188 x 84)	8.5 x 9.5 x 3.8 (216 x 242 x 97)	11.8 x 21.0 x 7.0 (300 x 533 x 178)
Mounting Hole Spacing in Inches (mm) — *w* x *h*						
Non-reversing Contactor	.76 x 2.64 (19.2 x 67)	1.33 x 4.0 (33.8 x 101)	1.46 x 4.10 (37 x 104)	.94 x 2.87 (24 x 73)	1.33 x 4.13 (33.8 x 105)	1.75 x 13.0 (44.5 x 330)
Reversing Contactor	1.31 x 2.52 (33.2 x 64)	3.15 x 5.35 (80 x 136)	3.15 x 5.35 (80 x 136)	5.51 x 6.89 (140 x 175)	7.87 x 9.06 (200 x 230)	7.82 x 13.0 (199 x 330)
Non-reversing Starter	.76 x 3.70 (19.3 x 94.0)	1.33 x 4.62 (33.8 x 117.3)	1.46 x 5.04 (37 x 128)	.94 x 2.87 (24 x 73)	1.33 x 4.13 (33.8 x 105)	1.75 x 18.3 (44.5 x 465)
Reversing Starter	1.31 x 3.52 (33.2 x 89.4)	3.15 x 5.35 (80 x 136)	3.15 x 5.35 (80 x 136)	5.51 x 6.89 (140 x 175)	7.87 x 9.06 (200 x 230)	7.82 x 18.3 (198.5 x 465)
Mounting Positions						
Panel-Vertical	Yes	Yes	Yes	Yes	Yes	Yes
Panel-Horizontal	Yes	Yes	Yes	Yes	Yes	Yes
DIN Rail Mountable	Yes	Yes ②	Yes ②	Yes ②	No	No
Weights in Lb. (kg)						
Non-reversing Contactor	.3 (.14)	.7 (.31)	.9 (.42)	2.8 (1.27)	6.7 (3.05)	20 (9.1)
Reversing Contactor	.6 (.27)	1.9 (.86)	2.6 (1.17)	6.9 (3.13)	16.9 (7.67)	48 (21.8)
Non-reversing Starter	.4 (.18)	.9 (.40)	1.2 (.53)	2.9 (1.32)	7.1 (3.20)	27 (12.3)
Reversing Starter	.9 (.40)	2.0 (.90)	2.6 (1.20)	7.1 (3.20)	16.8 (7.60)	55 (25.0)
Mechanical Operating Rate						
Maximum	6/sec	3/sec	3/sec	2/sec	2/sec	1/sec
Mechanical Life						
	23,000,000	10,000,000	10,000,000	8,000,000	8,000,000	5,000,000
Humidity						
③	95% non-condensing	95% non-condensing	95% non-condensing	95% non-condensing	95% non-condensing	95% non-condensing
Insulation Voltage (Ui)						
	690V	690V	690V	690V	690V	690V
Impulse Withstand Voltage (Uimp)						
	6 kV	6 kV	6 kV	6 kV	6 kV	6 kV
Max. Current Ratings @ 480V Ue						
AC-1 Thermal Current (Ith)	20	50	85	130	250	450
AC-2, AC-3 Operating Current (Ie)	12	32	50	100	200	420
AC-4 Operating Current (Ie)	10	32	50	100	150	270
Max. Current Ratings @ 600V Ue						
AC-1 Thermal Current (Ith)	16	40	68	104	200	360
AC-2, AC-3 Operating Current (Ie)	9	25	40	80	160	336
AC-4 Operating Current (Ie)	8	18	34	68	120	150

① Auxiliaries add approximately 1.0" (25 mm) to depth for single, 1.2" (30 mm) for dual.
② Non-reversing contactors and starters only.
③ 99% by application.

Table 34-278. Specifications (Continued)

Description	A-Frame 27 mm	B-Frame 45 mm	C-Frame 54 mm	D-Frame 76 mm	E-Frame 105 mm	F-Frame 140 mm
Finger Protection						
Front	IP20	IP20	IP20	IP20	IP20	IP00
At Terminals	IP20	IP10	IP10	IP00	IP00	IP00
At Terminals with max. size wire installed	IP20	IP20	IP10	IP10	IP00	IP00
Terminals L1, L2, L3/T1, T2, T3 ①						
1 Wire per Terminal (stranded or solid)	16 – 12 AWG (1.5 – 2.5 mm^2)	14 – 8 AWG (1.5 – 10 mm^2)	14 – 4 AWG (1.5 – 16 mm^2)	14 – 1 AWG (1.5 – 35 mm^2)	6 – 250 MCM (16 – 120 mm^2)	4 – 750 MCM (25 – 420 mm^2)
2 Wires per Terminal (stranded or solid)	16 – 12 AWG ② (1.5 – 2.5 mm^2)	14 – 10 AWG (1.5 – 4 mm^2)	14 – 6 AWG (1.5 – 16 mm^2)	14 – 2 AWG (1.5 – 25 mm^2)	6 – 3/0 AWG (16 – 70 mm^2)	1/0 – 300 MCM (50 – 150 mm^2)
Strip Length	.32" (8 mm)	.45" (11 mm)	.5" (12 mm)	.7" (18 mm)	.8" (21 mm)	1.5" (40 mm)
Torque (max.)	18 lb-in (2.0 Nm)	20 lb-in (2.2 Nm) for 14 – 10 AWG (1.5 – 6 mm^2); 25 lb-in (2.8 Nm) for 8 AWG (10 mm^2)	35 lb-in (4.0 Nm) for 14 – 10 AWG (1.5 – 6 mm^2); 40 lb-in (4.5 Nm) for 8 AWG (10 mm^2); 45 lb-in (5.0 Nm) for 6 – 4 AWG (16 mm^2)	45 lb-in (5.0 Nm) for Single 14 – 8 AWG (1.5 – 10 mm^2); 100 lb-in (11 Nm) for Single 6 – 1 AWG (16 – 35 mm^2) and Dual Wire Combinations	250 lb-in (28 Nm)	550 lb-in (62 Nm)
Driver Flat Hex Key	 PZ1 or 3/16" —	 — 2.5 mm	 — 3 mm	 — 4 mm [5/32"]	 — 8 mm [5/16"]	 — 8 mm [5/16"]
Operation Performance						
Coil Voltage (nominal)	24V DC	24V DC	24V DC	24V DC	24V DC	24V DC
Coil Operating Voltage Range (VDC)	20 – 28	20 – 28	20 – 28	20 – 28	20 – 28	20 – 28
Control Terminals						
(- and +) 1 Wire per Terminal	14 – 12 AWG ③ (1.5 – 2.5 mm^2)	14 – 12 AWG (1.5 – 2.5 mm^2)	14 – 12 AWG (1.5 – 2.5 mm^2)	14 – 12 AWG (1.5 – 2.5 mm^2)	14 – 12 AWG (1.5 – 2.5 mm^2)	14 – 12 AWG (1.5 – 2.5 mm^2)
(- and +) 2 Wires per Terminal	14 AWG ③ (1.5 mm^2)	14 AWG (1.5 mm^2)	14 AWG (1.5 mm^2)	14 AWG (1.5 mm^2)	14 AWG (1.5 mm^2)	14 AWG (1.5 mm^2)
(P, F, R, 1, 2, 3) 1 Wire per Terminal	22 – 12 AWG ③ (0.5 – 2.5 mm^2)	22 – 12 AWG (0.5 – 2.5 mm^2)	22 – 12 AWG (0.5 – 2.5 mm^2)	22 – 12 AWG (0.5 – 2.5 mm^2)	22 – 12 AWG (0.5 – 2.5 mm^2)	22 – 12 AWG (0.5 – 2.5 mm^2)
(P, F, R, 1, 2, 3) 2 Wires per Terminal	18 – 14 AWG ③ (0.75 – 1.5 mm^2)	18 – 14 AWG (0.75 – 1.5 mm^2)	18 – 14 AWG (0.75 – 1.5 mm^2)	18 – 14 AWG (0.75 – 1.5 mm^2)	18 – 14 AWG (0.75 – 1.5 mm^2)	18 – 14 AWG (0.75 – 1.5 mm^2)
Torque (max.)	4.5 lb-in (.5 Nm)	4.5 lb-in (.5 Nm)	4.5 lb-in (.5 Nm)	4.5 lb-in (.5 Nm)	4.5 lb-in (.5 Nm)	4.5 lb-in (.5 Nm)
Strip Length	.25 (7 mm)	.25 (7 mm)	.25 (7 mm)	.25 (7 mm)	.25 (7 mm)	.25 (7 mm)
Driver (Flat)	.13 (3.5 mm) ③	.13 (3.5 mm)	.13 (3.5 mm)	.13 (3.5 mm)	.13 (3.5 mm)	.13 (3.5 mm)
Temperature ④						
Operating	-40° to +149°F (-40° to +65°C)	-40° to +149°F (-40° to +65°C)	-40° to +149°F (-40° to +65°C)	-40° to +149°F (-40° to +65°C)	-40° to +149°F (-40° to +65°C)	-40° to +149°F (-40° to +65°C)
Storage	-58° to +176°F (-50° to +80°C)	-58° to +176°F (-50° to +80°C)	-58° to +176°F (-50° to +80°C)	-58° to +176°F (-50° to +80°C)	-58° to +176°F (-50° to +80°C)	-58° to +176°F (-50° to +80°C)

① Use Class B 75°C copper wire only (or 90°C copper wire sized for 75°C operation per NEC).

② Not applicable to starter T1, T2, T3. One wire per terminal.

③ 27 mm Non-reversing Starter —
- (- and +) 14 AWG (1.5 mm^2) only
- P, F, 1, A: 1 wire per terminal only, 22 – 14 AWG (0.5 – 1.5 mm^2)
- Torque: 2.25 lb-in (.25 Nm)
- Driver: .09 in (2.5 mm)

④ Consult factory for higher ratings.

34

Table 34-278. Specifications (Continued)

Description	A-Frame 27 mm	B-Frame 45 mm	C-Frame 54 mm	D-Frame 76 mm	E-Frame 105 mm	F-Frame 140 mm
Environmental						
Shock/Vibration	15G/5G	15G/5G	15G/5G	15G/5G	15G/5G	15G/5G ③
Pollution Degree ① EMC Environment	2 1	2 1	2 1	2 1	2 1	2 1
Altitude ① in Ft. (m)	6600 (2000)	6600 (2000)	6600 (2000)	6600 (2000)	6600 (2000)	6600 (2000)
Pull-In Time (mS) @ 24V DC						
Excl. Debounce Time	15	15	15	25	30	70 – 200
Incl. Debounce Time	67 ②	75	80	88	95	120 – 250 ②
Dropout Time (mS) @ 24V DC						
Excl. Debounce Time	8	5	5	12	15	50 – 150
Incl. Debounce Time	60 ②	65	70	75	80	70 – 200 ②

① Consult factory for higher ratings.
② Add 50 mS for 27 and 140 mm Starters for additional microprocessor.
③ The Non-reversing Starter requires the use of all six mounting screws for the maximum rating.

Note: At other temperatures expressed in °C, for either inrush or sealed, use the 20°C value from the table in the following:

Watts = W_{20} [1.1 – .005(T) and
Amps = A_{20} [1.1 – .005(T)]
For example, inrush requirements for a
D-Frame Starter at -25°C would be:
Watts = 130 [1.1 – .005 (-25)] = 160
Amps = 5.4 [1.1 – .005 (-25)] = 6.6

Note:
- Response time for Control Inputs = Debounce Time
- The time between operating forward and reverse must be greater than the Debounce Time.

Table 34-279. 24V DC Power Supply Requirements @ 68°F (20°C) (see Note at bottom left) ④⑤

Contactor/Starter Size		Sealed In		Inrush		
Catalog Number ⑥	Frame/ mm	Wattage	Amps	Wattage	Amps	Duration (mS)
E_11A__X3N	A/27	1.3	.054	20	.83	30
E_01A___3A	A/27	2.0	.083	20	.83	30
E_11B__X3N	B/45	3.7	.15	80	3.3	50
E_01B___3A	B/45	3.2	.13	80	3.3	50
E_11C__X3N	C/54	4.2	.18	90	3.8	50
E_01C___3A	C/54	3.6	.15	90	3.8	50
E__1D___3_	D/76	5.0	.21	130	5.4	65
E__1E___3_	E/105	5.6	.23	140	5.8	85
E__1F__X3N	F/140	12.0	.50	200	8.3	250
E_01F___3A	F/140	13.0	.54	200	8.3	250

④ The sum of the sealed in values of the contactors/starters must be less than the power supply sealed in value. The largest contactor/starter inrush value must be less than the power supply inrush value.
⑤ Refer to **Tab 44** for further power supply information.
⑥ _ indicates missing digit/character of the Catalog Number; may have multiple values.

Electrical Life — AC-1, AC-2, AC-3 and AC-4 Utilization Categories

Table 34-280. Utilization Categories

The International Electrotechnical Commission (IEC) has developed utilization categories for contactors and auxiliary contacts. The categories describe the type of electrical load and the conditions for making and breaking the current.	
Category	**Typical Application**
AC-1	Non-inductive or slightly inductive loads: Resistance furnaces, heating.
AC-2	Slip-ring motors: Starting and stopping of running motors
AC-3	Squirrel cage motors: Starting, switching off motors during running (motors in most industrial applications typically fall into this category).
AC-4	Squirrel cage motors: Starting, plugging ①, inching ② (very few applications in industry are totally AC-4).

① Plugging is stopping or reversing the motor rapidly by reversing the connections while the motor is running.
② Inching or jogging is energizing the motor once or repeatedly for short durations to obtain small movements of the motor driven load.

Life Load Curves — Eaton's Cutler-Hammer *IT.* Electro-Mechanical Series IEC contactors have been designed and manufactured for superior life performance. All testing has been based on requirements as found in IEC 60947-4-1 and conducted by us. When selecting a contactor designed to IEC requirements, the specifier must give attention to the specific load, utilization category and the required electrical life. For a definition of Utilization Categories, see **Table 34-280** above.

Note: AC-3 tests are conducted at rated device currents and AC-4 tests are conducted at six-times rated device currents. All tests have been run at 460V, 60 Hz.

Actual application life may vary, depending on environmental conditions and application duty cycle.

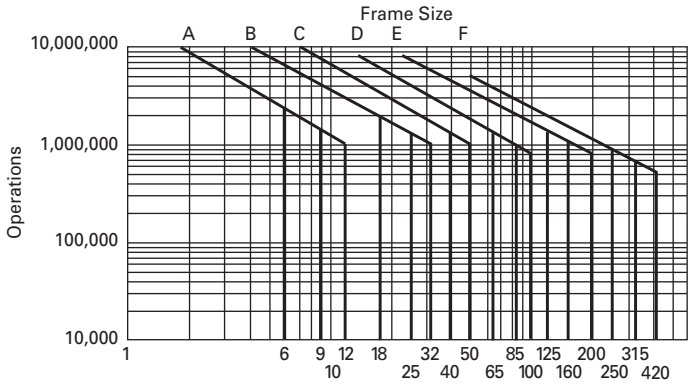

Note: Preliminary data.

Figure 34-148. Electrical Life — AC-3 Utilization Category

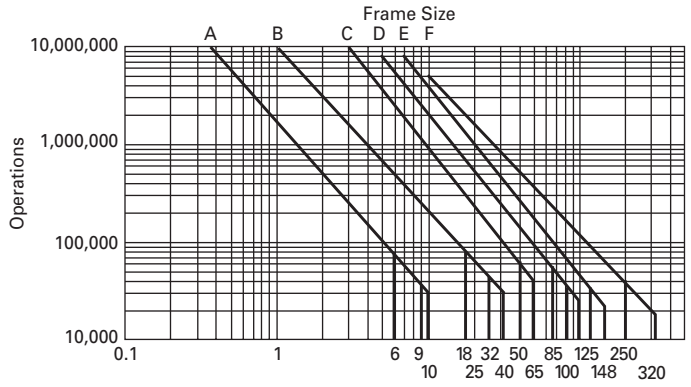

Note: Preliminary data.

Figure 34-149. Electrical Life — AC-4 Utilization Category

Trip Times

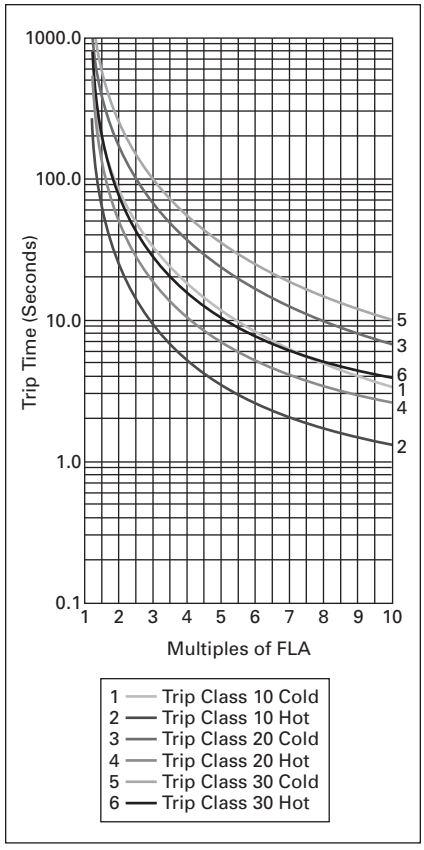

Figure 34-150. Class 10, 20 and 30 Trip Curves

Contactor Choice —

- Decide what utilization category the application is and choose the appropriate curve from **Figure 34-148** or **Figure 34-149**.
- Locate the intersection of the life-load curve with the operational current (Ie) of the application, as found on the horizontal axis.
- Read the estimated contact life along the vertical axis in number of operations.

Modular Components — Contactor Field Assembly

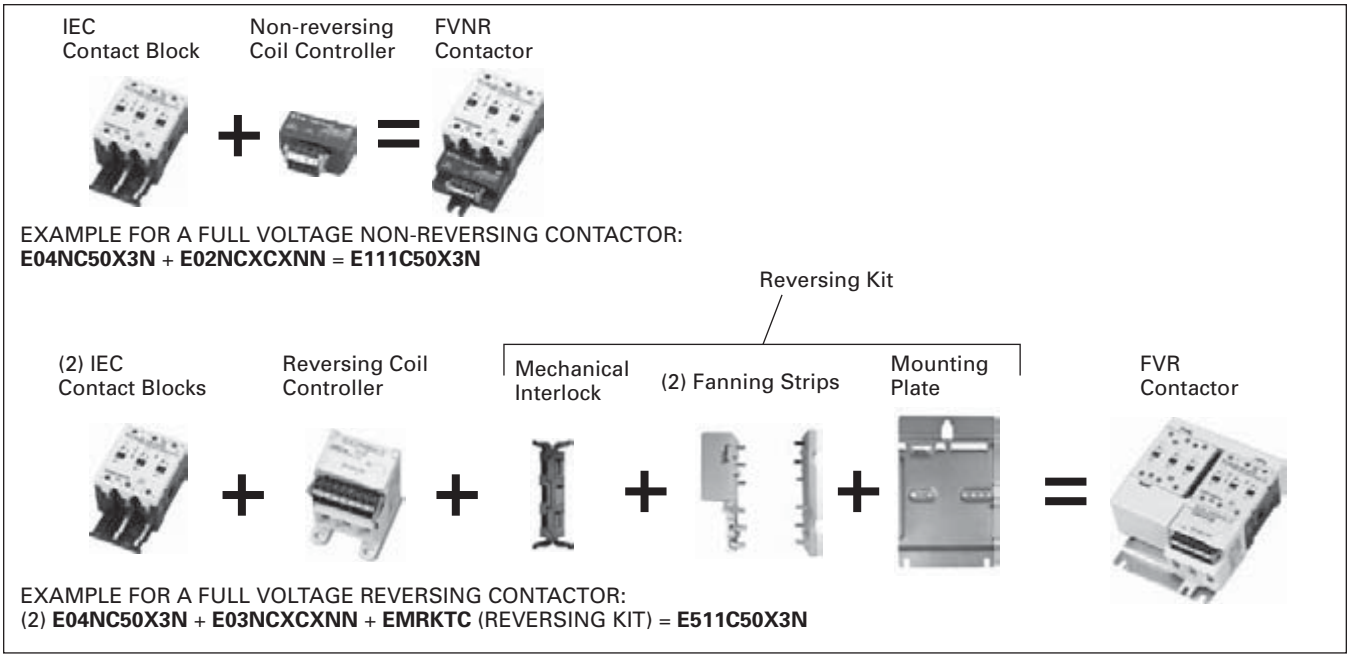

Figure 34-151. Modular Contactor Assembly

Modular Components — Starter Field Assembly

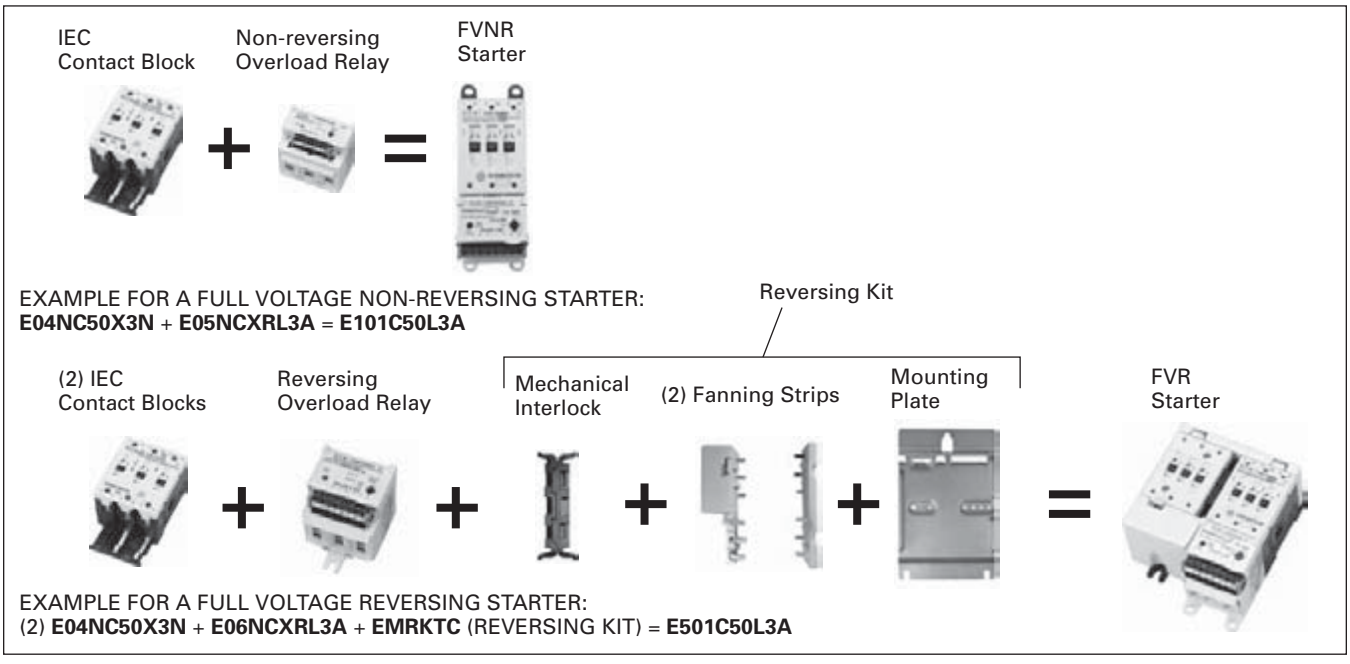

Figure 34-152. Modular Starter Assembly

IEC Contact Block

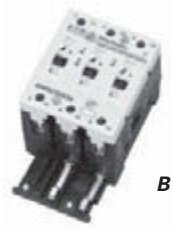

B Frame

Table 34-281. IEC Contact Block

Frame	Amperes	Catalog Number	Price U.S. $
B-Frame 45 mm	18 25 32	**E04NB18X3N** **E04NB25X3N** **E04NB32X3N**	
C-Frame 54 mm	40 50	**E04NC40X3N** **E04NC50X3N**	
D-Frame 76 mm	65 85 100	**E04ND65X3N** **E04ND85X3N** **E04ND10X3N**	
E-Frame 105 mm	125 160 200	**E04NE12X3N** **E04NE16X3N** **E04NE20X3N**	

Note:

■ E04N + E05N = E101; E04N + E02N = E111 (45 – 105 mm)
■ E04N + E06N = E501; E04N + E03N = E511 (45 – 105 mm)

IEC Coil Controller



B Frame
Non-reversing

Table 34-282. IEC Coil Controller

Frame	Catalog Number	Price U.S. $
Non-reversing		
B-Frame — 45 mm	**E02NBXCXNN**	
C-Frame — 54 mm	**E02NCXCXNN**	
D-Frame — 76 mm	**E02NDXCXNN**	
E-Frame — 105 mm	**E02NEXCXNN**	
F-Frame — 140 mm	**EMUCCF**	
Reversing		
B-Frame — 45 mm	**E03NBXCXNN**	
C-Frame — 54 mm	**E03NCXCXNN**	
D-Frame — 76 mm	**E03NDXCXNN**	
E-Frame — 105 mm	**E03NEXCXNN**	
F-Frame — 140 mm	**EMUCCF**	

IEC Solid-State Overload Relay



Non-reversing



Reversing

Table 34-283. IEC Solid-State Overload Relay

Frame	Overload Adjustment Range (Amperes)	Catalog Number	Price U.S. $
Non-reversing			
A-Frame 27 mm	.25 – .8 .59 – 1.9 1.4 – 4.4 2.8 – 9.0 3.8 – 12	**E05NAXRA3A** **E05NAXRB3A** **E05NAXRC3A** **E05NAXRD3A** **E05NAXRE3A**	
B-Frame 45 mm	.25 – .8 .59 – 1.9 1.4 – 4.4 2.8 – 9.0 6.3 – 20 10 – 32	**E05NBXRA3A** **E05NBXRB3A** **E05NBXRC3A** **E05NBXRD3A** **E05NBXRG3A** **E05NBXRJ3A**	
C-Frame 54 mm	.25 – .8 .59 – 1.9 1.4 – 4.4 2.8 – 9.0 5.0 – 16 8.4 – 27 16 – 50	**E05NCXRA3A** **E05NCXRB3A** **E05NCXRC3A** **E05NCXRD3A** **E05NCXRF3A** **E05NCXRH3A** **E05NCXRL3A**	
D-Frame 76 mm	5.0 – 16 8.4 – 27 14 – 45 31 – 100	**E05NDXRF3A** **E05NDXRH3A** **E05NDXRK3A** **E05NDXRN3A**	
E-Frame 105 mm	14 – 45 28 – 90 42 – 135 63 – 200	**E05NEXRK3A** **E05NEXRM3A** **E05NEXRP3A** **E05NEXRR3A**	
F-Frame 140 mm	42 – 135 84 – 270 131 – 420	**E05NFXRP3A** **E05NFXRS3A** **E05NFXRT3A**	
Reversing			
B-Frame 45 mm	.25 – .8 .59 – 1.9 1.4 – 4.4 2.8 – 9.0 6.3 – 20 10 – 32	**E06NBXRA3A** **E06NBXRB3A** **E06NBXRC3A** **E06NBXRD3A** **E06NBXRG3A** **E06NBXRJ3A**	
C-Frame 54 mm	.25 – .8 .59 – 1.9 1.4 – 4.4 2.8 – 9.0 5.0 – 16 8.4 – 27 16 – 50	**E06NCXRA3A** **E06NCXRB3A** **E06NCXRC3A** **E06NCXRD3A** **E06NCXRF3A** **E06NCXRH3A** **E06NCXRL3A**	
D-Frame 76 mm	5.0 – 16 8.4 – 27 14 – 45 31 – 100	**E06NDXRF3A** **E06NDXRH3A** **E06NDXRK3A** **E06NDXRN3A**	
E-Frame 105 mm	14 – 45 28 – 90 42 – 135 63 – 200	**E06NEXRK3A** **E06NEXRM3A** **E06NEXRP3A** **E06NEXRR3A**	

Discount Symbol **1CD1**

34

Auxiliary Contacts



Auxiliary Contacts are available for mounting on ***IT.*** Electro-Mechanical Contactors and Starters. The various choices available for non-reversing models are shown in **Tables 34-284** and **34-285,** and their ratings in **Tables 34-286** – **34-288**. For reversing models, the number of auxiliaries indicated is for each of the contactors/starters in the assembly.

Table 34-284. Auxiliary Contact Availability — A – F Frames

Front Mounted (Maximum Auxiliaries per Contactor/Starter) ②								
Contactor/Starter Size						Contact Type	Catalog Number	Price U.S. $
A-Frame 27 mm	B-Frame 45 mm	C-Frame 54 mm	D-Frame 76 mm	E-Frame 105 mm	F-Frame 140 mm			
1	3	3	3	3	—	1NO	**EMA13**	
1	3	3	3	3	—	1NC	**EMA14**	
—	2	2 ①	3	3	—	1NO-1NC	**EMA15**	
—	2	2 ①	3	3	—	2NO	**EMA16**	
—	2	2 ①	3	3	—	2NC	**EMA17**	
1	2	3	3	3	3	Logic Level 1NO-1NC	**EMA70**	

① Other combinations: "Single, dual, single"; "Dual, single, dual"; "Dual, logic level, dual".
② For reversers, multiply quantities by two.

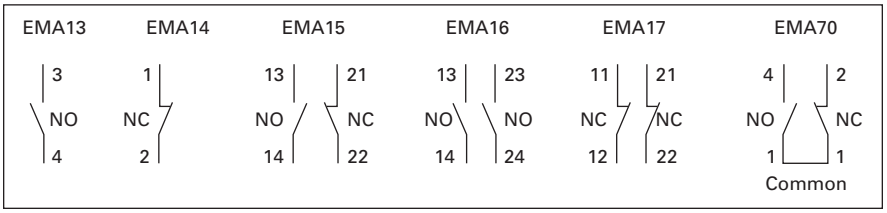

Figure 34-153. Connecting Diagram — A – F Frames

Table 34-285. Auxiliary Contact Availability — F-Frame 140 mm

Auxiliary Contacts per Non-reversing and Reversing Contactor or Starter				
Max.	Contact Type	Description	Catalog Number	Price U.S. $
2	1NO	Base auxiliary (max. 1 per side)	**C320KGS41**	
2	1NO-1NC	Base auxiliary (max. 1 per side)	**C320KGS42**	
6	1NO	C320KGS41 or C320KGS42 required (max. 3 Add-on auxiliaries per side)	**C320KGS20**	
2	1NO Logic Level	C320KGS41 or C320KGS42 required (max. 1 Add-on auxiliary per side)	**C320KGS20L**	
6	1NC	C320KGS41 or C320KGS42 required (max. 2 Add-on auxiliaries per side)	**C320KGS21**	
2	1NC Logic Level	C320KGS41 or C320KGS42 required (max. 1 Add-on auxiliary per side)	**C320KGS21L**	
2	1NO-1NC	C320KGS41 or C320KGS42 required (max. 1 Add-on auxiliary per side)	**C320KGS22**	
2	1NO-1NC Logic Level	C320KGS41 or C320KGS42 required (max. 1 Add-on auxiliary per side)	**C320KGS22L** ③	
3	1NO-1NC Logic Level	Front Mounted Only	**EMA70** ④	

③ Form C Contacts.
④ For reversers, multiply quantities by two.

Note:

- Side Mounted: Maximum (10) total circuits.
- Front Mounted: Maximum (6) total circuits. ④
- Maximum 4 auxiliaries per side (base + 3 side mounted).
- **EMASA/B_** have been superseded by the above Catalog Numbers.

Table 34-286. IEC Ratings

DC-13		AC-15	
Ue Voltage	*Ie* Amps.	*Ue* Voltage	*Ie* Amps.
24	5	48	8
48	2.5	120	6
125	1.1	240	4
250	.55	440	2

Table 34-287. NEMA A600 Ratings

Current	AC Voltage			
	120	240	480	600
Make and Interrupting	60	30	15	12
Break	6	3	1.5	1.2
Continuous	10	10	10	10
Thermal	10	10	10	10

Table 34-288. NEMA P300 Ratings

Current	DC Voltage	
	125	250
Make and Interrupting	1.1	.55
Break	1.1	.55
Continuous	5	5
Thermal	5	5

Table 34-289. EMA70 Auxiliary Contact

DC-12		AC-12	
Ue	Ie	Ue	Ie
30	.1	250	.1

Starter Network Adapter Product (SNAP)



Cat. No. D77B-DSNAP-X1 with 54 mm IT. Starter

The Starter Network Adapter Product (SNAP) is a front-mount device that serves as a single DeviceNet node, providing communication capability, control and monitoring to Eaton's Cutler-Hammer Intelligent Technologies (***IT.***) Electromechanical Starters (B – F Frames) as well as the ***IT.*** S75X SoftStart.

When HAND-OFF-AUTO is required, the HOA option will allow for the connection of hard wired operators. This option allows for Hand Control even if the DSNAP is not connected.

For more information and pricing, see **Tab 50**.

Discount Symbol **1CD1**

IEC Reversing Mounting Plates



Table 34-290. IEC Reversing Mounting Plates

Frame Size	Catalog Number	Price U.S. $
B – C	**EMA9B**	
D	**EMA9D**	
E	**EMA9E**	

IEC Reversing Kits

Table 34-291. IEC Reversing Kits

Frame Size	Description	Catalog Number	Price U.S. $
B	For Contactor and Starter ①	**EMRKTB**	
C	For Contactor and Starter ①	**EMRKTC**	
D	For Contactor and Starter ①	**EMRKTD**	
E	For Contactor and Starter ①	**EMRKTE**	
F	For Contactor ②	**EMRKTF**	

① Includes Fanning Strips, Mechanical Interlock, Mounting Plate and hardware.
② Includes Fanning Strips (Bus Bar Set), Mechanical Interlock and hardware.

IEC Control Terminals



Table 34-295. IEC Control Terminals

No. of Pins	Terminal Markings	IEC Size	Coil Controller		Contactor		Overload		Starter		Catalog Number	Price U.S. $
			Non-reversing	Reversing	Non-reversing	Reversing	Non-reversing	Reversing	Non-reversing	Reversing		
8	-+PFR123	A						X		X	**EMA76L**	
		B		X		X	X	X	X	X		
		C		X		X	X	X	X	X		
		D	X	X	X	X	X	X	X	X		
		E	X	X	X	X	X	X	X	X		
		F					X	X	X	X		
5	-+PFR	F	X	X	X	X					**EMA77L**	
5	RFP+-	F		X		X		X		X	**EMA77LR**	
4	-+PF	A			X						**EMA78L**	
		B	X		X							
		C	X		X							
6	-+PF1A	A					X		X		**EMA81** ⑤	
(2) 5	-+PFR and RFP+-	F				X				X	**EMA80L** ⑥	

⑤ Non-locking.
⑥ Consists of (1) EMA77L and (1) EMA77LR inter-wired.

IEC Mechanical Interlock

Table 34-292. IEC Mechanical Interlock

Frame Size ③	Catalog Number	Price U.S. $
B – E	**EMMB**	
F ④	**C321KM50**	

③ The A-Frame 27 mm does not have a separate mechanical interlock due to its embedded design and board requirements.
④ The F-Frame 140 mm uses the Freedom Series Mechanical Interlock.

IEC 2-Wire Reversing Interface

Table 34-293. IEC 2-Wire Reversing Interface

Description	Catalog Number	Price U.S. $
8-Pin for 45 – 140 mm (IEC 6A – 420A Reversing Starters) 8-Pin for 45 – 105 mm (IEC 18A – 200A Reversing Contactors)	**EMA2WR8**	

DIN Rail Catch



Table 34-294. DIN Rail Catch

Frame Size	Description	Catalog Number	Price U.S. $
B – C	Catch with Leaf Spring and Pad	**EMDRCB**	
D	Catch with Leaf Spring and Pad	**EMDRCD**	

Discount Symbol **1CD1**

IEC Contact Kits



Table 34-296. IEC Contact Kits

Frame Size	Description	Catalog Number	Price U.S. $
C	3-Pole, 40A	**EMCKT40** ①	
	3-Pole, 50A	**EMCKT50** ①	
D	3-Pole, 65A	**EMCKT65** ①	
	3-Pole, 85A	**EMCKT85** ①	
	3-Pole, 100A	**EMCKT100** ①	
E	3-Pole, 125A 3-Pole, 160A 3-Pole, 200A	**EMCKT125** **EMCKT160** **EMCKT200**	
F	3-Pole, 250A 3-Pole, 315A 3-Pole, 420A	**EMCKT250** **EMCKT315** **EMCKT420**	

① Includes set of Hold Open and Non-hold Open movable contacts.

24V DC Coils

Table 34-297. 24V DC Coils

	Frame Size	Catalog Number	Price U.S. $
	B	**EMCB**	
	C	**EMCC**	
	D	**EMCD**	
	E	**EMCE**	
	F	**EMCF**	

Fanning Strips

Table 34-298. Reversing Fanning Strips

Frame Size	Description	Catalog Number	Price U.S. $
A	Line and Load Side Wire Sets	**EMFRA**	
B	Line Side	**EMFRLB**	
	Load Side	**EMFRTB**	
C	Line Side	**EMFRLC**	
	Load Side	**EMFRTC**	
D	Line Side	**EMFRLD**	
	Load Side	**EMFRTD**	
E	Line Side	**EMFRLE**	
	Load Side	**EMFRTE**	
F	Line Side Bus Bar Set	**EMFRLF**	
	Load Side Bus Bar Set	**EMFRTF**	

Lug Kits



Table 34-299. Lug Kits

Frame Size	Description	Catalog Number	Price U.S. $
C	3 pc.	**EMLUGKTC**	
D	1 pc.	**EMLUGKTD**	
E	1 pc. — For Contactor and Line Side Starter	**EMLUGKTLE**	
	1 pc. — For Load Side Starter	**EMLUGKTTE**	
F	Horizontal Box Lug ②	**EMLUGKTFA**	
	Vertical Box Lug	**EMLUGKTFB**	

② Kit includes Lug Cover — required for contactors only.

Table 34-300. Ring Lug Retrofit Kits

Product	IEC A-Frame			IEC E-Frame			IEC F-Frame		
	Catalog Number			Catalog Number			Catalog Number		
	Factory Installed	Retrofit Kits ③	Lug Kits ④	Factory Installed	Retrofit Kits ③	Lug Kits ④	Factory Installed	Retrofit Kits ③	Lug Kits ④
E111		**EMRTXKTA**		Add "**-RTX**"	**EMRTXKTEN**	**EMLUGREN**	Add "**-RTX**"	**EMRTXKTF**	**EMLUGRFC**
E511		**EMRTXKTA**		Add "**-RTX**"	**EMRTXKTER**	**EMLUGRER**	Add "**-RTX**"	**EMRTXKTF**	**EMLUGRFC**
E101		**EMRTXKTA**		Add "**-RTX**"	**EMRTXKTEN**	**EMLUGREN**	Add "**-RTX**"	**EMRTXKTF**	**EMLUGRFS**
E501		**EMRTXKTA**		Add "**-RTX**"	**EMRTXKTER**	**EMLUGRER**	Add "**-RTX**"	**EMRTXKTF**	**EMLUGRFS**
E05N				Add "**-RTX**"			Add "**-RTX**"		
E06N				Add "**-RTX**"			Add "**-RTX**"		
E02N				Add "**-RTX**"					
E03N				Add "**-RTX**"					
E04N				Add "**-RTX**"					

③ Retrofit Kits used to field install ring lugs on standard lug units.
④ Lug Kits used to field install standard lugs into factory assembled ring lug units.

Discount Symbol **1CD1**

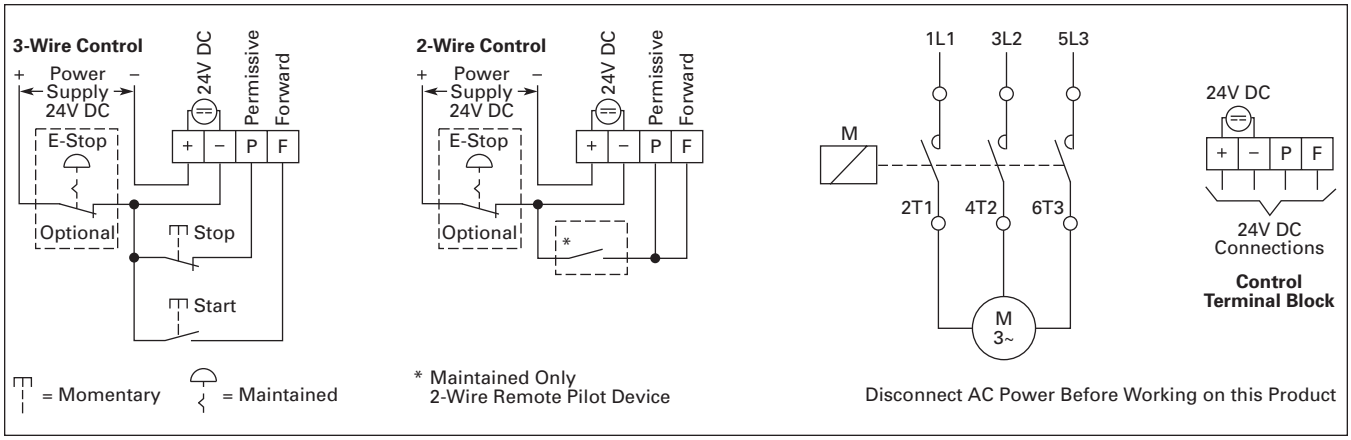

Figure 34-154. Wiring – Non-reversing Contactor

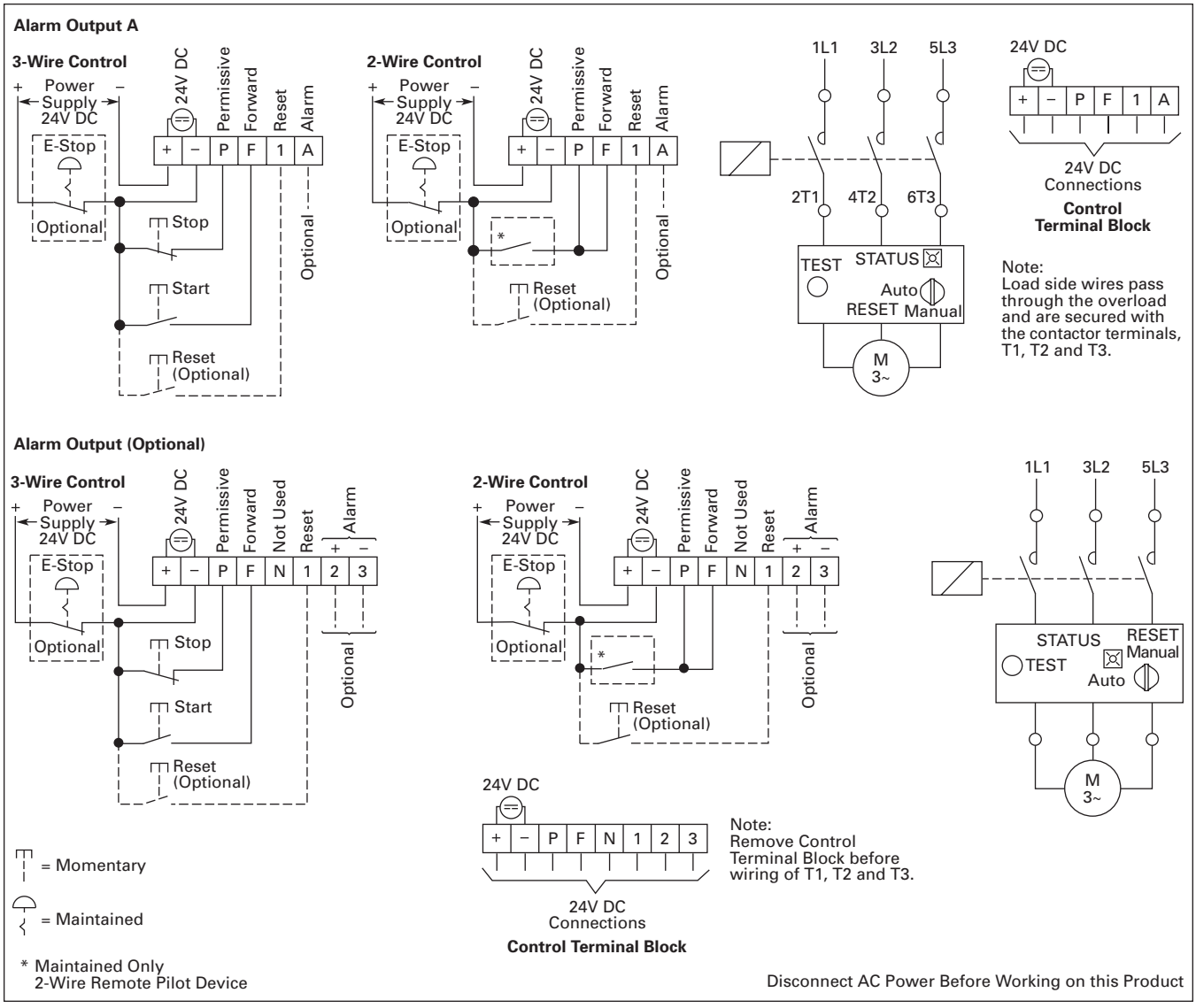

Figure 34-155. Wiring – Non-reversing Starters

Non-reversing and Reversing Contactors (Frame A)

Table 34-301. Approximate Dimensions in Inches (mm)

Frame Size	Overall					Mounting Holes				Req. Mtg. Screws	Terminals		
	Width	Height	Depth	Depth w/ Auxiliary	Depth added w/DIN Rail	Width	Height	Mtg. Hole to Top	DIN Rail to Top		Control	Line	Load
	A	B	C	D	E	F	G	H	J	K	P	Q	R
Non-reversing													
A	1.1 (27)	3.0 (75)	2.4 (60)	3.5 (88)	.2 (5)	.76 (19.2)	2.64 (67)	.1 (3.5)	.6 (15)	(3) #8 M4	.6 (16)	1.7 (43)	1.7 (43)
Reversing													
A	2.4 (60)	2.9 (73)	2.4 (60)	3.5 (88)	.2 (5)	1.31 (33.2)	2.52 (64)	.2 (5)	.5 (13)	(3) #8 M4	.6 (16)	1.7 (43)	1.7 (43)

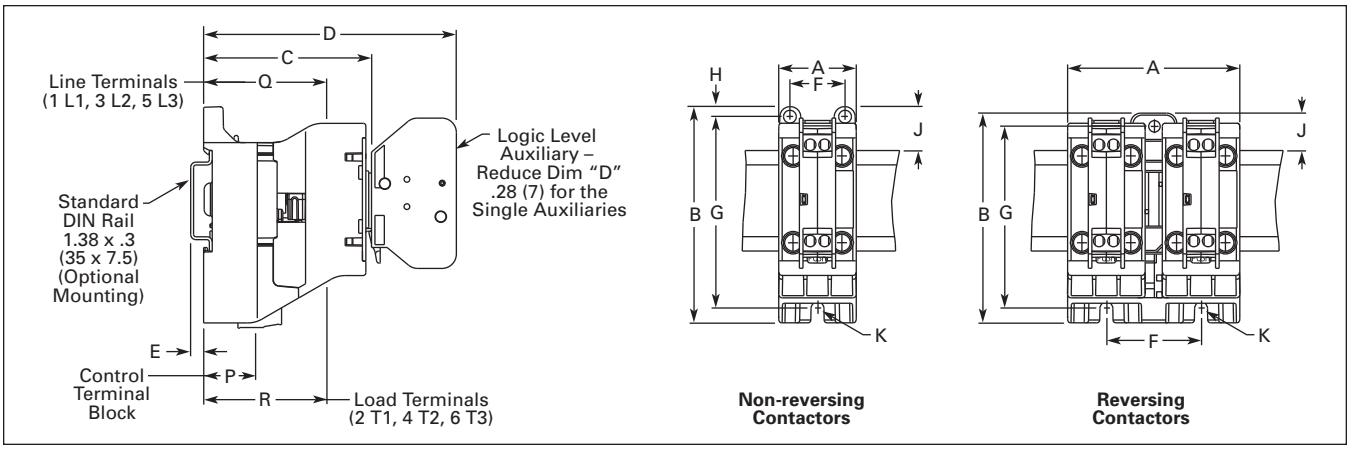

Figure 34-156. Approximate Dimensions — Inches (mm)

Non-reversing Contactors (Frames B & C)

Table 34-302. Approximate Dimensions in Inches (mm)

Frame Size	Overall					Mounting Holes				Req. Mtg. Screws	Terminals		
	Width	Height	Depth	Depth w/ Auxiliary	Depth added w/DIN Rail	Width	Height	Mtg. Hole to Top	DIN Rail to Top		Control	Line	Load
	A	B	C	D	E	F	G	H	J	K	P	Q	R
B	1.8 (45)	4.4 (111)	2.4 (60)	3.6 (91)	.1 (3)	1.33 (33.8)	4.0 (101)	.2 (5)	.9 (23)	(3) #8 M4	.7 (19)	1.2 (30)	1.2 (30)
C	2.1 (54)	4.45 (113)	2.4 (60)	3.6 (91)	.1 (3)	1.46 (37)	4.1 (104)	.2 (5)	.8 (20)	(3) #8 M4	.7 (19)	1.2 (30)	1.2 (30)

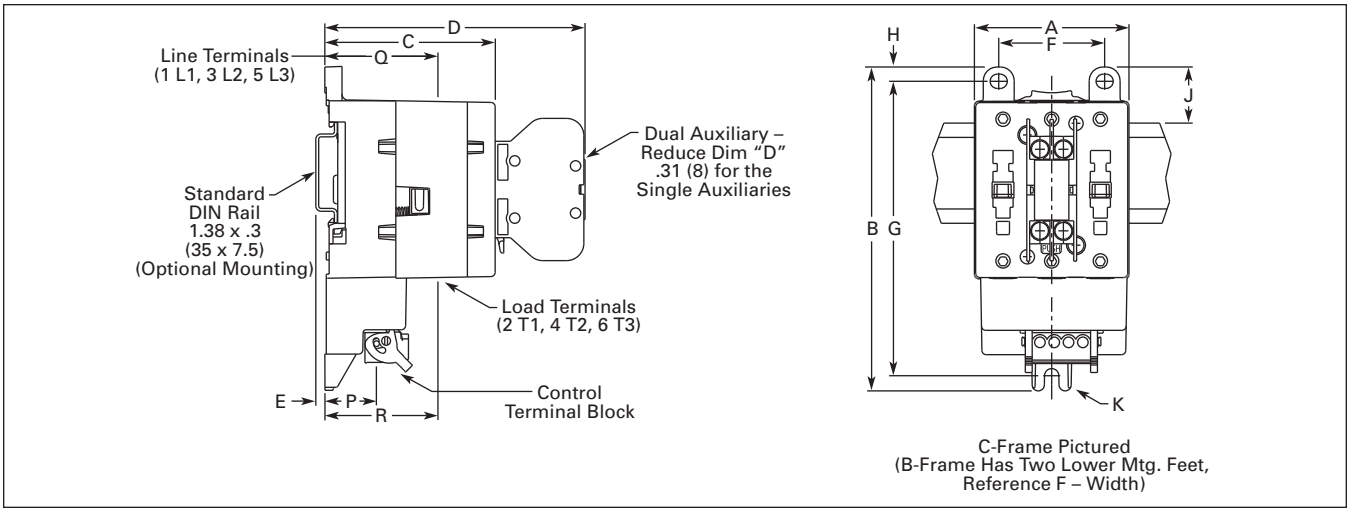

Figure 34-157. Approximate Dimensions — Inches (mm)

Non-reversing Contactors (Frames D & E)

Table 34-303. Approximate Dimensions in Inches (mm)

Frame Size	Overall					Mounting Holes				Req. Mtg. Screws	Terminals		
	Width	Height	Depth	Depth w/ Auxiliary	Depth added w/DIN Rail	Width	Height	Mtg. Hole to Top	DIN Rail to Top		Control	Line	Load
	A	B	C	D	E	F	G	H	J	K	P	Q	R
D	3.0 (76)	5.9 (150)	3.1 (79)	4.2 (107)	.2 (4)	.94 (24)	2.87 (73)	.5 (13)	.9 (23)	(4) #6 x 2 M3.5 x 50	2.4 (60)	1.5 (37)	.6 (14)
E	4.1 (105)	8.0 (203)	3.5 (90)	4.7 (119)	—	1.33 (33.8)	4.13 (105)	.6 (15)	—	(4) #8 x 1.5 M4 x 40	2.8 (72)	1.7 (42)	.3 (8)

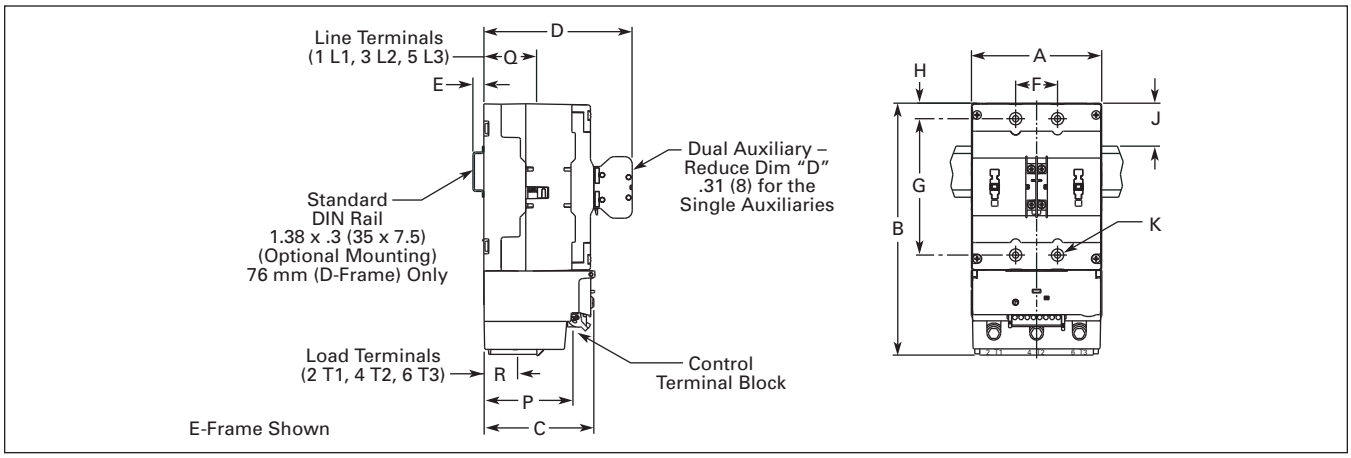

Figure 34-158. Approximate Dimensions — Inches (mm)

Non-reversing Contactors (Frame F)

Table 34-304. Approximate Dimensions in Inches (mm)

Frame Size	Overall					Mounting Holes			Req. Mtg. Screws	Terminals		
	Width	Height	Depth	Depth w/Logic Level Auxiliary	Width w/Side Auxiliaries	Width	Height	Mounting Hole to Top		Control	Line	Load
	A	B	C	D	E	F	G	H	K	P	Q	R
F	5.6 (142)	14.0 (356)	7.0 (178)	8.2 (208)	6.70 (170)	1.75 (44.5)	13.0 (330)	0.58 (14.7)	(4) 5/16 M8	.8 (20)	4.4 (112)	4.4 (112)

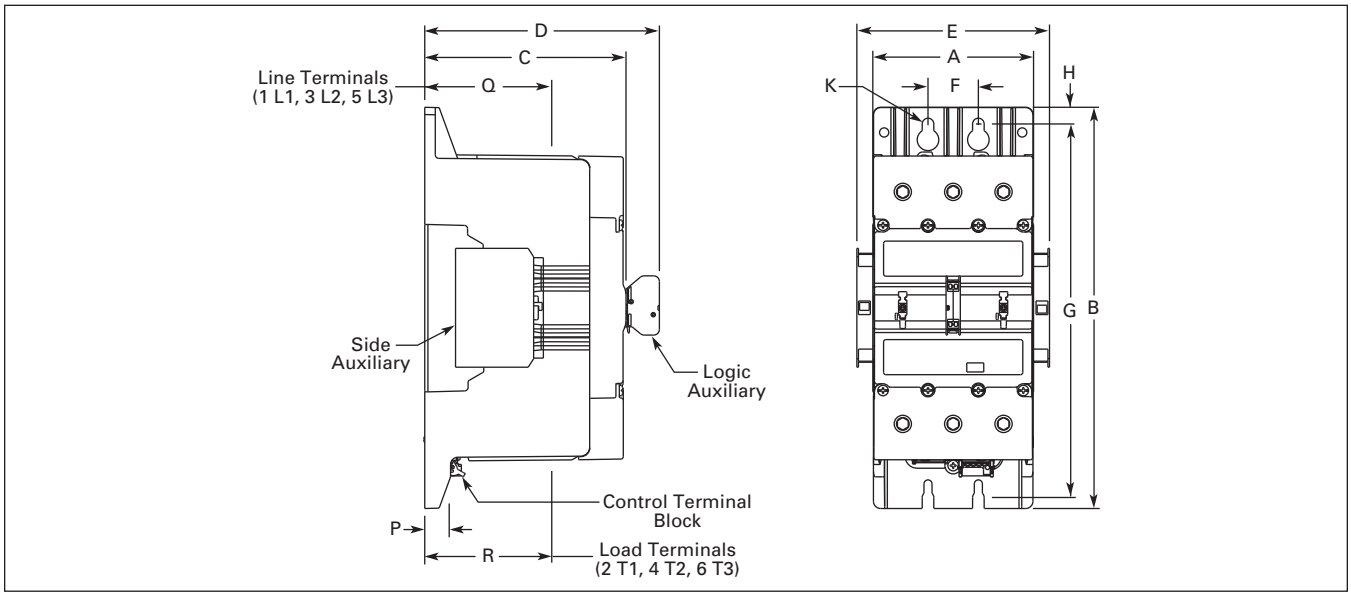

Figure 34-159. Approximate Dimensions in Inches (mm)

Reversing Contactors (Frames B – E)

Table 34-305. Approximate Dimensions in Inches (mm)

Frame Size	Overall				Mounting Holes			Req. Mtg. Screws	Terminals		
	Width	Height	Depth	Depth w/ Auxiliary	Width	Height	Mtg. Hole to Top		Control	Line	Load
	A	B	C	D	F	G	H	K	P	Q	R
B	3.8 (96)	5.9 (149)	2.7 (69)	3.8 (96)	3.15 (80)	5.35 (136)	.3 (7)	(3) #10 M5	2.0 (50)	1.5 (38)	.9 (22)
C	4.5 (114)	5.9 (149)	2.6 (67)	3.8 (96)	3.15 (80)	5.35 (136)	.3 (7)	(3) #10 M5	2.0 (50)	1.5 (38)	.6 (16)
D	6.2 (158)	7.4 (188)	3.3 (84)	4.4 (112)	5.51 (140)	6.89 (175)	.2 (6)	(3) #10 M5	2.6 (67)	1.9 (48)	.9 (22)
E	8.5 (216)	9.5 (242)	3.8 (97)	4.9 (125)	7.87 (200)	9.06 (230)	.2 (6)	(3) #10 M5	3.1 (80)	2.1 (54)	.7 (17)

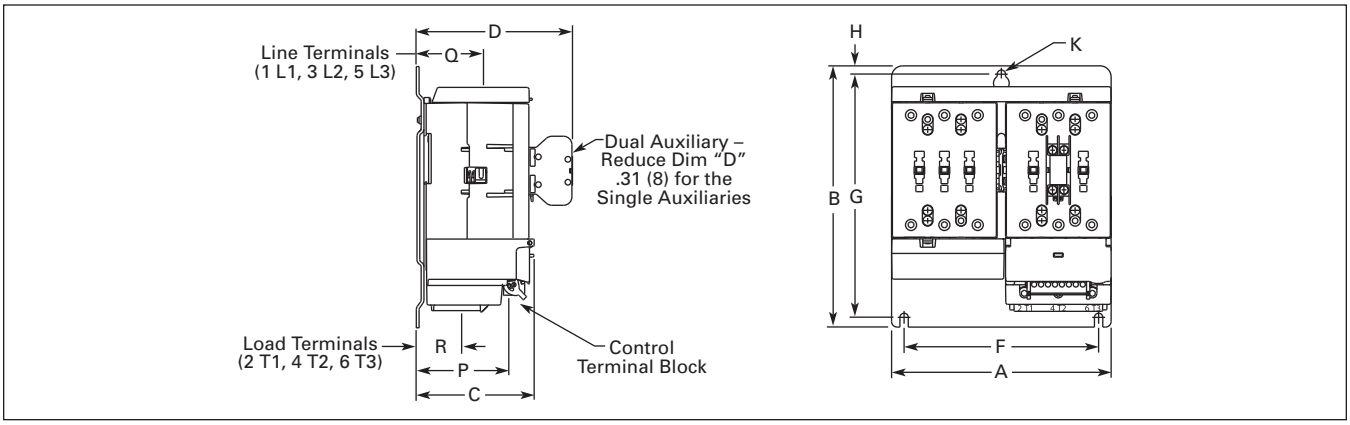

Figure 34-160. Approximate Dimensions — Inches (mm)

Reversing Contactors (Frame F)

Table 34-306. Approximate Dimensions in Inches (mm)

Frame Size	Overall					Mounting Holes			Req. Mtg. Screws	Terminals		
	Width	Height	Depth	Depth w/Logic Level Auxiliary	Width w/Side Auxiliaries	Width	Height	Mounting Hole to Top		Control	Line	Load
	A	B	C	D	E	F	G	H	K	P	Q	R
F	11.7 (297)	17.2 (437)	7.0 (178)	8.2 (208)	12.8 (325)	7.8 (198.5)	13.0 (330)	2.19 (55.5)	(4) 5/16 M8	.8 (20)	4.4 (112)	4.4 (112)

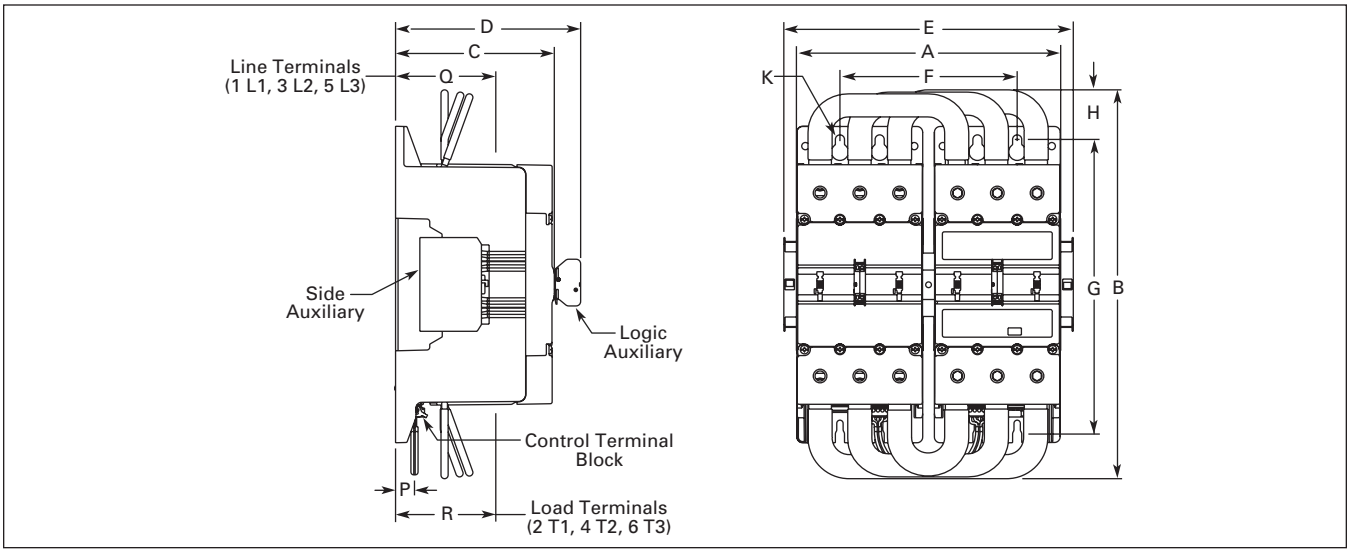

Figure 34-161. Approximate Dimensions in Inches (mm)

Non-reversing and Reversing Starters (Frame A)

Table 34-307. Approximate Dimensions in Inches (mm)

Frame Size	Overall					Mounting Holes				Req. Mtg. Screws	Reset Button			Terminals		
	Width	Height	Depth	Depth w/ Auxiliary	Depth added w/DIN Rail	Width	Height	Mtg. Hole to Top	DIN Rail to Top		Width	Height	Depth	Control	Line	Load
	A	B	C	D	E	F	G	H	J	K	L	M	N	P	Q	R
Non-reversing																
A	1.20 (31)	4.0 (102)	3.1 (79)	3.5 (89)	.2 (5)	.76 (19.3)	3.70 (94.0)	.1 (3.5)	.6 (15)	(3) #8 M4	.3 (8.0)	2.9 (72.4)	3.1 (78)	2.2 (55)	1.7 (43)	1.8 (45)
Reversing																
A	2.50 (64)	4.0 (102)	3.1 (79)	3.5 (89)	.2 (5)	1.31 (33.2)	3.52 (89.4)	.2 (5)	.5 (13)	(3) #8 M4	.9 (24)	3.0 (76.0)	3.1 (78)	2.2 (55)	1.7 (43)	1.8 (45)

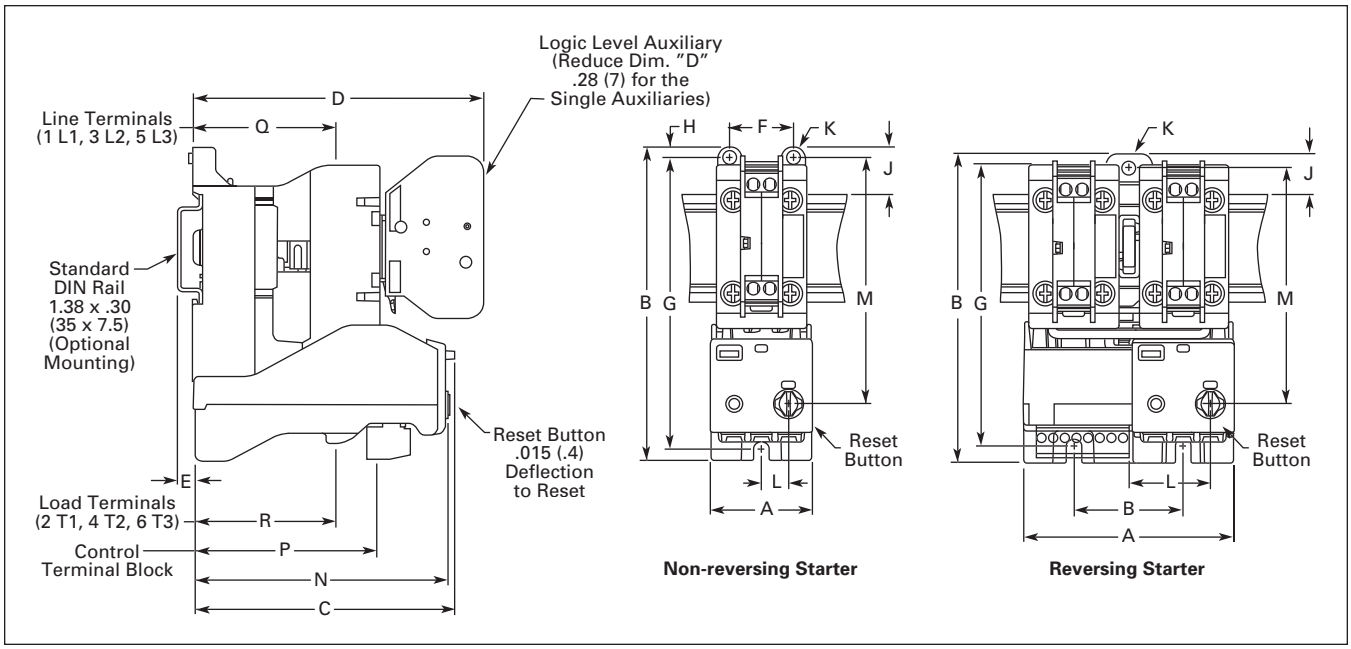

Figure 34-162. Approximate Dimensions — Inches (mm)

34

Non-reversing Starters (Frames B – E)

Table 34-308. Approximate Dimensions in Inches (mm)

Frame Size	Overall					Mounting Holes		Req. Mtg. Screws	Reset Button			Terminals		
	Width	Height	Depth	Depth w/ Auxiliary	Depth added w/DIN Rail	Width	Height		Width	Height	Depth	Control	Line	Load
	A	B	C	D	E	F	G	K	L	M	N	P	Q	R
B	1.8 (45)	5.0 (127)	2.5 (63)	3.6 (91)	.1 (3)	1.33 (33.8)	4.62 (117.3)	(3) #8 M4	.6 (14)	3.6 (91)	2.5 (63)	1.7 (44)	1.2 (30)	.6 (16)
C	2.1 (54)	5.4 (138)	2.5 (63)	3.6 (91)	.1 (3)	1.46 (37)	5.04 (128)	(3) #8 M4	.7 (17)	3.7 (93)	2.4 (62)	1.8 (45)	1.2 (30)	.3 (8)
D	3.0 (76)	5.9 (150)	3.1 (79)	4.2 (107)	.2 (4)	.94 (24)	2.87 (73)	(4) #6 x 2 M3.5 x 50	.7 (17)	4.2 (106)	3.1 (78)	2.4 (60)	1.5 (37)	.6 (14)
E	4.1 (105)	8.0 (203)	3.5 (90)	4.7 (119)	—	1.33 (33.8)	4.13 (105)	(4) #8 x 1.5 M4 x 40	.7 (17)	5.7 (146)	3.5 (88)	2.8 (72)	1.7 (42)	.3 (8)

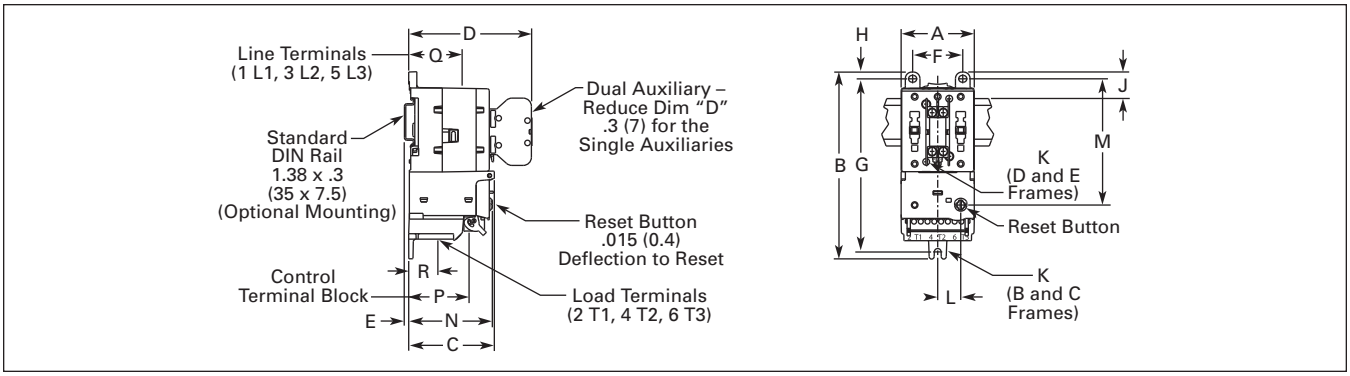

Figure 34-163. Approximate Dimensions — Inches (mm)

Non-reversing Starter (Frame F)

Table 34-309. Approximate Dimensions in Inches (mm)

Frame Size	Overall					Mounting Holes			Req. Mtg. Screws	Reset Button			Terminals			
	Width	Length	Depth	Depth w/Logic Level Auxiliary	Width w/Side Auxiliaries	Width	Height	Mntg. Hole to Top		Width	Height	Depth	Control	Line	Load	Load
	A	B	C	D	E	F	G	I	K	L	M	N	P	Q	R	S
F	5.7 (145)	19.4 (493)	7.0 (178)	8.2 (208)	6.7 (170)	1.75 (44.5)	18.3 (465)	.58 (14.7)	(4) 5/16 M8	2.4 (61)	12.4 (315)	5.3 (135)	5.0 (126)	4.4 (112)	3.0 (75)	4.0 (101)

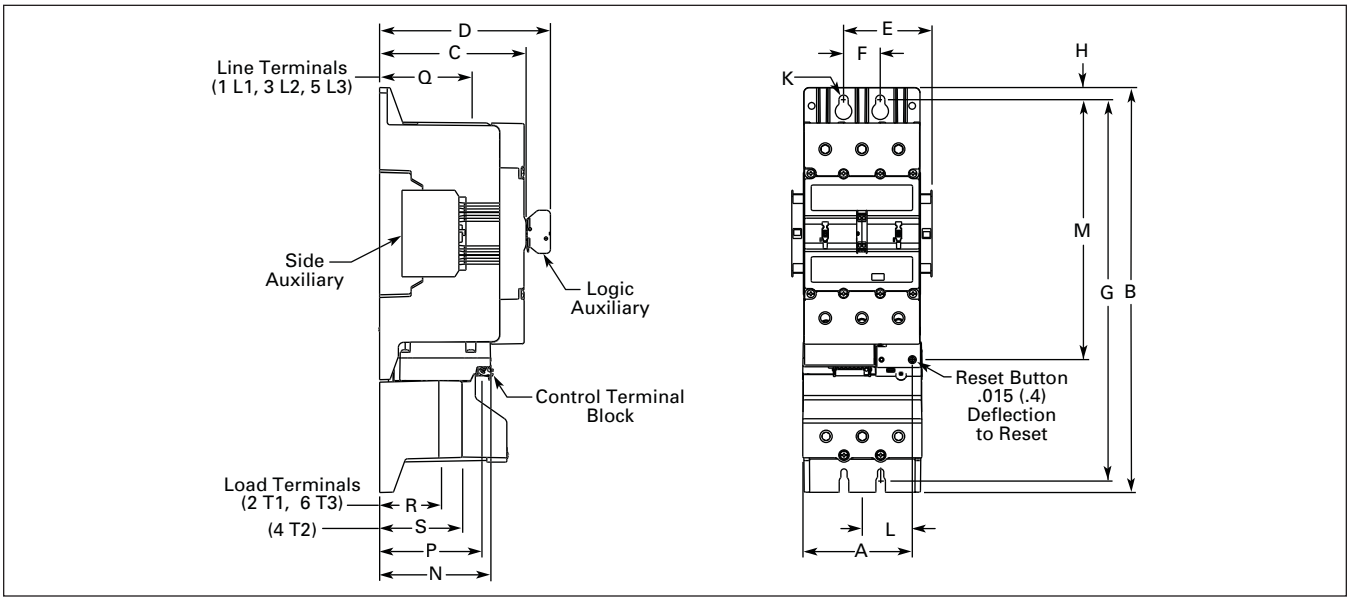

Figure 34-164. Approximate Dimensions in Inches (mm)

Reversing Starters (Frames B – E)

Table 34-310. Approximate Dimensions in Inches (mm)

Frame Size	Overall				Mounting Holes			Req. Mtg. Screws	Reset Button			Terminals		
	Width	Length	Depth	Depth w/ Auxiliary	Width	Height	Mtg. Hole to Top		Width	Height	Depth	Control	Line	Load
	A	B	C	D	F	G	H	K	L	M	N	P	Q	R
B	3.8 (96)	5.9 (149)	2.7 (69)	3.8 (96)	3.15 (80)	5.35 (136)	.28 (7)	(3) #10 M5	1.6 (40)	3.8 (97)	2.7 (68)	2.0 (50)	1.5 (38)	.9 (22)
C	4.5 (114)	5.9 (149)	2.6 (67)	3.8 (96)	3.15 (80)	5.35 (136)	.28 (7)	(3) #10 M5	1.7 (43)	4.1 (104)	2.6 (65)	2.0 (50)	1.5 (38)	.6 (16)
D	6.2 (158)	7.4 (188)	3.3 (84)	4.4 (112)	5.51 (140)	6.89 (175)	.24 (6)	(3) #10 M5	2.3 (58)	5.5 (139)	3.3 (83)	2.6 (67)	1.9 (48)	.9 (22)
E	8.5 (216)	9.5 (242)	3.8 (97)	4.9 (125)	7.87 (200)	9.06 (230)	.24 (6)	(3) #10 M5	2.9 (73)	7.2 (182)	3.7 (94)	3.1 (80)	2.1 (54)	.7 (17)

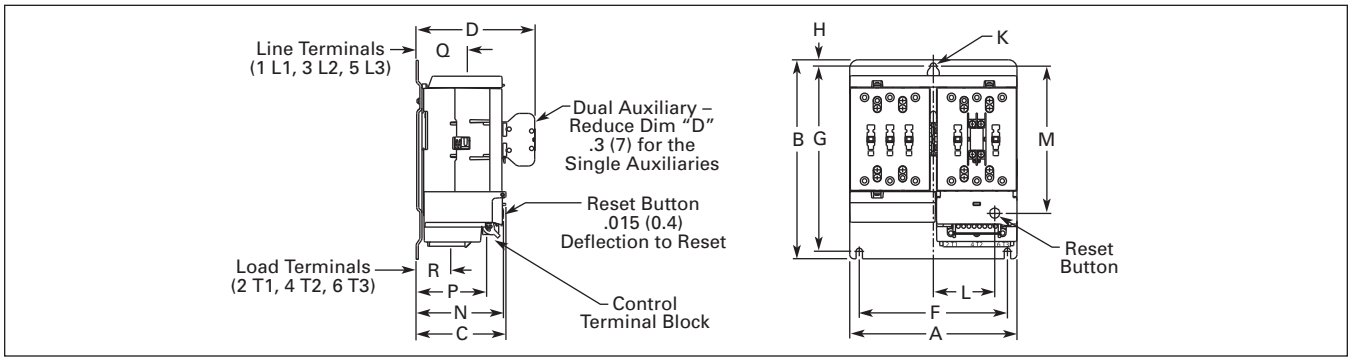

Figure 34-165. Approximate Dimensions — Inches (mm)

Reversing Starter (Frame F)

Table 34-311. Approximate Dimensions in Inches (mm)

Frame Size	Overall					Mounting Holes				Req. Mtg. Screws	Reset Button			Terminals			
	Width	Length	Depth	Depth w/Logic Level Auxiliary	Width w/Side Auxiliaries	Width	H1	Mntg. Hole to Top	H2		Width	Height	Depth	Control	Line	Load	Load
	A	B	C	D	E	F	G	H	I	K	L	M	N	P	Q	R	S
F	11.8 (300)	21.0 (533)	7.0 (178)	8.2 (208)	12.8 (325)	7.82 (199)	18.3 (465)	2.19 (55.5)	13 (330)	(5) 5/16 M8	5.4 (138)	12.4 (315)	5.3 (135)	5.0 (126)	4.4 (112)	3.0 (75)	4.0 (101)

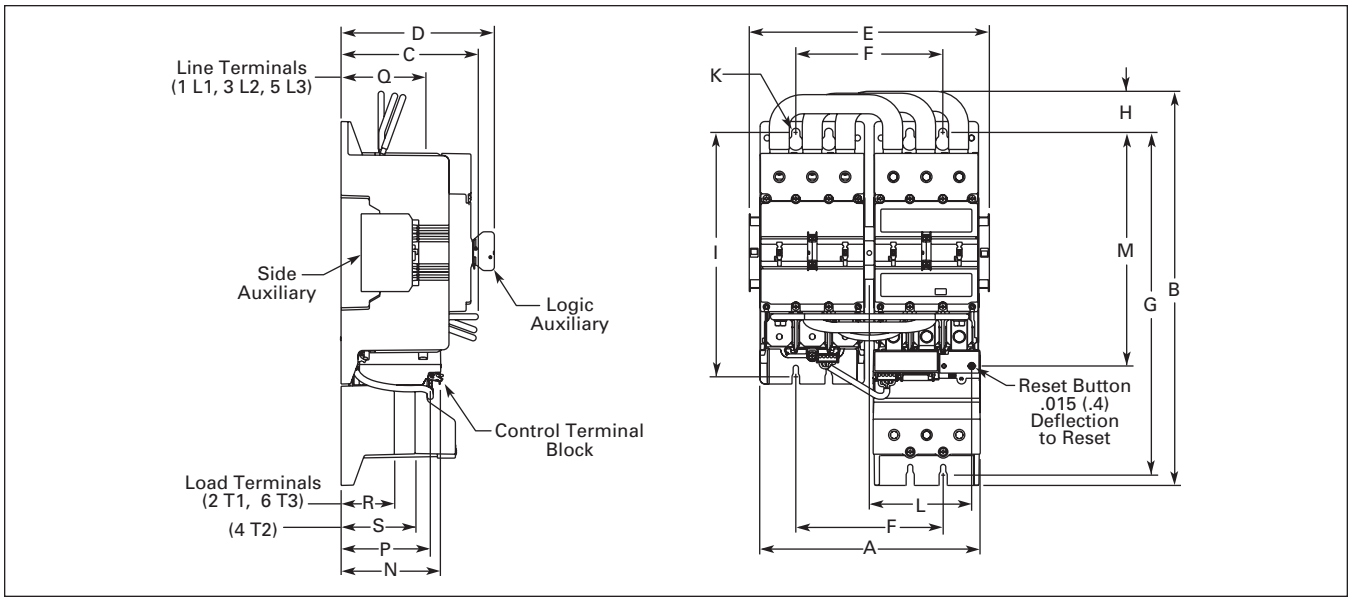

Figure 34-166. Approximate Dimensions in Inches (mm)

Contents

Description	*Page*
Product Family Overview	
Product Description	**34-256**
Features	**34-256**
Standards and Certifications	**34-256**
Instructional Leaflets	**34-256**
Catalog Number Selection	**34-257**
Contactors — Non-reversing and Reversing	
Product Selection	**34-258**
Accessories	
Auxiliary Contacts Front and Side Mounted	**34-259**
Overload Relays	**34-259**
ID Markers, Reversing Connection Links and Surge Suppressors	**34-260**

Note: For more information, see CA03402001E.



Mini Contactor with Screw Pressure Plate Terminals Catalog Number CE12BNC310B



Mini Contactor Reversing Pair with Screw Pressure Plate Terminals Catalog Number CE52CNC310H

Product Description

Eaton offers a complete line of Cutler-Hammer® Miniature Control Products that includes mini contactors (mechanically interlocked and non-reversing), overload relays and snap-on accessories. A wide range of applications are possible, including small electrical motors fractional to 5 hp (480V AC). Because of its compact size, the line is best suited to be applied in light duty loads such as hoisting, packaging, material handling, heating, lighting and automation systems.

Features

Mini Contactors

- Available in three different terminal configurations:
  - ❑ Screw Pressure Plate
  - ❑ Quick Connect
  - ❑ Solder Pin
- Mechanically interlocked or non-reversing
- Panel or DIN rail mounting (35 mm)
- Fingerproof protection
- Low noise operation
- AC or DC operation possible

Overload Relays (Bimetallic Type — C312)

- 11 Settings — to cover .10 to 12.0 Amps
- Phase loss compensated
- Ambient temperature compensated
- Class 10 — Bimetallic type O.L.
- Stop and test buttons included
- 1NO-1NC auxiliary contacts included as standard

Accessories

- Side and front mounted auxiliary contacts
- Identification clips
- Surge suppressors
- Reversing connection links

Standards and Certifications

Meet or exceed the North American and International standards:

- UL
- CSA
  - ❑ **Mini Contactors and Surge Suppressors**
    UL File No. E19224, Category NLDX and NLDX2; CSA File No. LR353, Class 3211-07
  - ❑ **Accessories**
    UL File No. E19223, Category NKCR and NKCR2; CSA File No. LR353, Class 3211-07
  - ❑ **Overload Relays**
    UL File No. E19223, Category NKCR and NKCR2; CSA File No. LR353, Class 3211-03
- IEC, VDE, CE and most other International standards

Instructional Leaflets

49097 Minicontactors, Overloads and Accessories

Catalog Number Selection

Table 34-312. IEC Miniature Controls Catalog Numbering System

C E 1 2 B N C 3 1 0 W 1

Designation
CE - IEC Contactor

Type
12 - Non-reversing
52 - Mechanically Interlocked

Power
B - 4 kW (3 hp @460V AC)
C - 5.5 kW (5 hp @460V AC)

Enclosure
N - Open

Connections
B - Quick Connects
C - Screw Pressure Plate
P - Solder Pin

No. of Poles
3 - 3 Poles
4 - 4 Poles

No. of NO Aux. Contacts
0 - None
1 - One

No. of NC Aux. Contacts
0 - None
1 - One

Coil Designations

AC Coil Voltage (Frequency 40 – 450 Hz)

T - 24V
W - 48V
A - 110 – 127V
B - 220 – 240V
H - 227V
L - 380 – 415V
} 3.5 VA

DC Coil Voltage

R1 - 12V
T1 - 24V
W1 - 48V
A1 - 110 – 125V
B1 - 220 – 240V
} 3.5 Watts

DC — Low Power Consumption Coils

T2 - 24V (1.4 Watts)
V2 - 17 – 32V (2.4 Watts)
T3 - 24V (1.7 Watts with Surge Suppressor)
V3 - 17 – 32V (2.8 Watts with Surge Suppressor)

NOTE: No renewal parts (coils, contact kits) available for the Mini Control line.

34

Product Selection

Non-reversing/Reversing Contactors with Screw Pressure Terminals



Screw Pressure Plate Terminals — Non-reversing Contactor

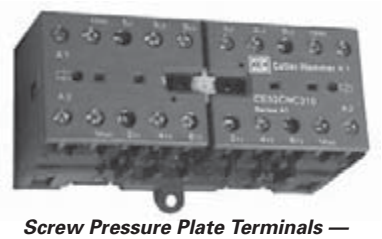

Screw Pressure Plate Terminals — Reversing Contactor

Table 34-313. Non-reversing Contactor — Screw Pressure Plate Terminals ①

Max. AC-3 Amp Rating (400V)	IEC 947 AC-1 Thermal Current (400V)	kW Rating AC-3 400/440V	Maximum UL Horsepower								No. of Power Poles	Aux. Contacts	Catalog Number	Price U.S. $	
			1-Phase Horsepower Ratings			3-Phase Horsepower Ratings								AC Coil	DC Coil
			110/ 120V	220/ 240V	480/ 600V	110/ 120V	200/ 208V	220/ 240V	440/ 480V	550/ 600V					
9	16	4	1/2	1	None	1	1	2	3	3	3	1NO	**CE12BNC310_**		
9	16	4	1/2	1	None	1	1	2	3	3	3	1NC	**CE12BNC301_**		
9	16	4	1/2	1	None	1	1	2	3	3	4	None	**CE12BNC400_**		
12	20	5.5	3/4	1-1/2	2	1	2	3	5	5	3	1NO	**CE12CNC310_**		
12	20	5.5	3/4	1-1/2	2	1	2	3	5	5	3	1NC	**CE12CNC301_**		
12	20	5.5	3/4	1-1/2	2	1	2	3	5	5	4	None	**CE12CNC400_**		

① Quick Connect and Solder Pin Terminals are available. Insert a "**B**" into the seventh digit for Quick Connect or "**P**" for Solder Pin Terminal.

Table 34-314. Reversing Contactor — Screw Pressure Plate Terminals ②

Max. AC-3 Amp Rating (400V)	IEC 947 AC-1 Thermal Current (400V)	kW Rating AC-3 400/440V	Maximum UL Horsepower								No. of Power Poles	Aux. Contacts	Catalog Number	Price U.S. $	
			1-Phase Horsepower Ratings			3-Phase Horsepower Ratings								AC Coil	DC Coil
			110/ 120V	220/ 240V	480/ 600V	110/ 120V	200/ 208V	220/ 240V	440/ 480V	550/ 600V					
9	16	4	1/2	1	None	1	1	2	3	3	3	1NO	**CE52BNC310_**		
9	16	4	1/2	1	None	1	1	2	3	3	3	1NC	**CE52BNC301_**		
12	20	5.5	3/4	1-1/2	2	1	2	3	5	5	3	1NO	**CE52CNC310_**		
12	20	5.5	3/4	1-1/2	2	1	2	3	5	5	3	1NC	**CE52CNC301_**		

② Screw pressure plate terminal contactors are supplied standard with reversing connection links included. Quick Connect and Solder Pin Terminals are available. Insert a "**B**" into the seventh digit for Quick Connect or "**P**" for Solder Pin Terminal.

Table 34-315. AC Coil Selection Table

Coil Voltage Frequency 40 – 450 Hz		Suffix Code ③
24	3.5 VA	**T**
48	3.5 VA	**W**
110 – 127	3.5 VA	**A**
220 – 240	3.5 VA	**B**
277	3.5 VA	**H**
380 – 415	3.5 VA	**L**

③ AC coils have an integrated protective circuit-rectifier bridge and varistor included.

Table 34-316. DC Coil Selection Table

Coil Voltage		Suffix Code
12	3.5 Watts	**R1**
24	3.5 Watts	**T1**
48	3.5 Watts	**W1**
110 – 125	3.5 Watts	**A1**
220 – 240	3.5 Watts	**B1**

DC Low Power Consumption Coils: Non-reversing Mini Contactors ④

24 (1.4 Watts)	**T2**
17 – 32 (2.4 Watts)	**V2**
24 (1.7 Watts with Surge Suppressor)	**T3**
17 – 32 (2.8 Watts with Surge Suppressor)	**V3**

④ Auxiliary contacts can not be used with Low Power Consumption DC Coils Suffix designations: **T2, V2, T3** and **V3**.

Table 34-317. Price Adder for Low Wattage DC Coils

Devices	Suffix Designations	Adder U.S. $
4 kW	**T2** & **V2** **T3** & **V3**	
5 kW	**T2** & **V2** **T3** & **V3**	

Discount Symbol **1CD7**

Auxiliary Contacts Front and Side Mounted

A total of six auxiliary contacts are available to be used with the mini control line.

Front mounted auxiliary contacts are available in three contact configurations (1NO-1NC, 2NO and 2NC) and can be screw mounted to non-reversing and reversing contactors with screw pressure plate terminals only.

Side mounted auxiliary contacts are available for the miniature control product line in three terminal versions: screw pressure plate, quick connect and solder pin. The side mounted auxiliary is mounted to the left side of non-reversing contactors without tools. Only one side mounted auxiliary can be mounted on these products.

Table 34-318. Front Mount Auxiliary Contacts for Screw Pressure Plate Terminals — Only Mini Contactor and Control Relay

Add-On Auxiliary Contacts Configuration	Catalog Number	Price U.S. $
1NO-1NC	**C320MCF11**	
2NO	**C320MCF20**	
2NC	**C320MCF02**	

Table 34-319. Side Mount Auxiliary Contacts for Screw Pressure Plate, Quick Connect, Solder Pin Terminals and Control Relays

Terminal Type Contactor/Control Relay	Add-On Auxiliary Contacts Configuration	Catalog Number	Price U.S. $
Screw Pressure Plate	1NO-1NC	**C320MCS11**	
Quick Connect	1NO-1NC	**C320MBS11**	
Solder Pin	1NO-1NC	**C320MPS11**	

Application Notes

- Side mounted auxiliary contacts can not be used simultaneously with front mounted auxiliary contacts.
- Auxiliary contacts can not be used with low power DC Coil Suffix designations **T2, T3, V2** or **V3**.
- Side mounted auxiliary contacts can not be used with mechanically interlocked contactors.
- Auxiliary contacts used with devices having screw pressure plate terminals are UL Listed and side mounted auxiliary contacts used with devices having quick connect or solder pin terminals are UL Recognized.

Overload Relays



Overload Relay

Table 34-320. Bimetallic Overload Relay — Class 10

Motor FLA in Amperes	Max. Fuse — Type gL A	Wt. Lbs. (kg)	Catalog Number	Price U.S. $
.10 – .16	.5	.154 (.070)	**C312AN3A**	
.16 – .24	1.0	.154 (.070)	**C312AN3B**	
.24 – .40	2.0	.154 (.070)	**C312AN3C**	
.40 – .60	2.0	.154 (.070)	**C312AN3D**	
.60 – 1.00	4.0	.154 (.070)	**C312AN3E**	
1.00 – 1.60	6.0	.154 (.070)	**C312AN3F**	
1.60 – 2.40	6.0	.154 (.070)	**C312AN3G**	
2.40 – 4.0	10.0	.154 (.070)	**C312AN3H**	
4.0 – 6.0	10.0	.154 (.070)	**C312AN3J**	
6.0 – 9.0	10.0	.154 (.070)	**C312AN3K**	
9.0 – 12.0	20.0	.154 (.070)	**C312AN3L**	

Note: Overload relays to be used with Pressure Plate Terminal type Mini Contactors only.

Thermal Overload Relay C312 — Technical Data

Conformity to Standards

- IEC 947-4-1, 947-5-1, CE
- UL 508, CSA 22.2

Thermal (Bimetallic) Overload Relay, C312 OL Relay

- Insulation Voltage (U_i): 690V AC
- Rated Operational Voltage (U_e): 690V AC
- Ambient Temperature: -13° to 122°F (-25° to +50°C) temperature compensated
- Storage: -40° to 158°F (-40° to +70°C)
- Impulse Withstand Voltage (U_{imp}): 6 kV
- Climatic Resistance —
  - Acc. to DIN 50 017
  - Acc. to UTE C 63 – 100: IEC 68-2-3, IEC 68-2-30
- Mounting Position: ± 30 from vertical position, not horizontal, not upside down, 5 mm side by side mounting distance
- Switching Frequency with Avoidance of Nuisance Trippings — max. ops./h: 15
- ≤ 40% ED — max. ops./h: 60 (if 6X in startup time ≤1 s)
- Overvoltage Category/Pollution Degree: III/3
- Safe Isolation to IEC 536: 300V AC
- Conventional Free Air Thermal Current (I_{th}): 6.0A

Discount Symbol **1CD7**

Identification Markers, Reversing Connection Links and Surge Suppressors

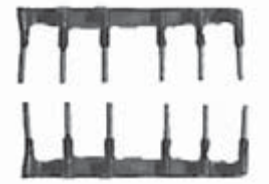

Reversing Connection Links



Surge Suppressors

Table 34-321. Other Accessories

Description	Catalog Number	Price U.S. $
Identification Markers	**C320MCM1**	
Surge Suppressors to use with Screw Pressure Plate Control Relays and Mini Contactors:		
Surge Suppressor 24 – 60V DC	**C320MSS1**	
Surge Suppressor 50 – 250V DC	**C320MSS2**	
Surge Suppressor 200 – 420V DC	**C320MSS3**	
Surge Suppressors to use with Quick Connect Control Relays and Mini Contactors:		
Surge Suppressor 24 – 60V DC	**C320MSS4**	
Surge Suppressor 50 – 250V DC	**C320MSS5**	
Surge Suppressor 200 – 420V DC	**C320MSS6**	
Reversing Connection Links (2 Pieces) ①	**C320MCR1**	

① To be used with mechanically interlocked screw pressure plate terminal contactors.

Discount Symbol **1CD7**



IEC AE17KNS0AFE
IEC Size K, 50 hp/460V



IEC AE17DNS0AFE
IEC Size D, 10 hp/460V

Product Description

Eaton's electrical business has been supplying quality Industrial Control products for more than 100 years — the Cutler-Hammer® Freedom Series line of Contactors and Starters continue in this tradition. The IEC Freedom Series Contactors and Starters feature a compact space-saving design, using state-of-the-art technology and the latest in high strength, impact and temperature resistant insulating materials.

Eaton is the only manufacturer to offer IEC Starters with two different overload options: Fixed Bimetallic Overload and Interchangeable Heater Overload with Heater Packs. Contactors and Overloads can also be ordered separately or as completely assembled starters with either overload relay option.

Features

Freedom IEC Features

Freedom IEC contactors and starters are designed to IEC standards and comply with the International Standard IEC 947-4-1. IEC products are a perfect choice when electrical and mechanical application parameters are known. They are typically smaller in size and provide higher ratings in a smaller package. They are available in 22 sizes to match the contactor to the application.

- Complies with IEC 947-4-1, EN, CENELEC, UL and CSA standards.
- 22 Sizes of contactors through 900 hp.
- DIN rail mountable through 20 hp.
- Adjustable bimetal overload relays — fixed or interchangeable heater.
- Available in Open and NEMA 1, 3R, 4/4X and 12 enclosures.

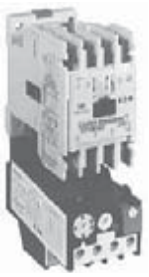

AE17 Fixed Heater
IEC Starter Size B



AE17 Fixed Heater
IEC Starter Size K



Series B
Heater Pack

Standards and Certifications

- Standard: Designed to meet or exceed UL, NEMA, IEC, CSA, VDE and BS
- UL Listed: UL File #E1491, Guide #NLDX — Open
- CSA Certified: CSA File #LR353, Class #321104 Open
- IEC: Sizes A – S, IEC 947-4-1; Sizes T – Z, IEC 158 (IEC 947 Pending)

Certified Type 2 Coordination

Eaton's Cutler-Hammer Freedom Series IEC starters are now UL Certified to achieve IEC 947 Type 2 coordination against 100,000A short circuit fault currents. Any brand of properly selected fuse can be used. Type 2 coordination means that the starter will be suitable for further use following a short circuit fault.

Contents

Description	*Page*
Product Family Overview	
Product Description	**34-261**
Features	**34-261**
Standards and Certifications	**34-261**
Contactors — Non-reversing and Reversing	
Product Description	**34-262**
Features	**34-262**
Product Selection — 3-Pole Contactors	**34-263**
Product Selection — 2-, 4- and 5-Pole Contactors	**34-264**
Accessories	**34-277**
Auxiliary Contacts	**34-277**
DC Magnet Coils	**34-279**
Renewal Parts	**34-284**

Note: For more information, see CA03402001E.



IEC Size B
Cat. No. CE15BNS3AB

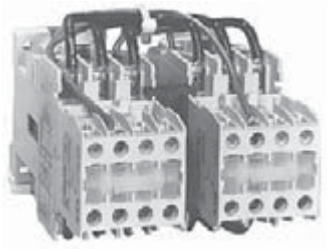

IEC Size D
Cat. No. CE55DN3AB

Product Description

Non-reversing

Contactors are most commonly used to switch motor loads in applications where running over current protection is either not required or is provided separately. Contactors consist of a magnetically actuated switch which can be remotely operated by a push-button station or pilot device such as a proximity switch, limit switch, float switch, auxiliary contacts, etc.

Reversing

Reversing contactors are used primarily for reversing single- or three-phase motors in applications where running over current protection is either not required or is provided separately. They consist of two contactors mechanically and electrically interlocked to prevent line shorts and energization of both contactors simultaneously.

Features

- **EN60947-4-1 IEC 947-4-1 Compliance** — new International Standard for low voltage switchgear and control devices.
- Long life twin break, silver cadmium oxide contacts — provide excellent conductivity and superior resistance to welding and arc erosion.
- Designed to 2,000,000 electrical and 20,000,000 mechanical operations at maximum hp ratings through 20 hp at 460V. Adequate for most general duty control applications.

Non-reversing

- UL listed and CSA certified.
- Highest horsepower rating in a compact, space-saving design, 45 mm frame rated maximum 20 hp at 460V, 65 mm frame rated maximum 50 hp, 90 mm frame rated 100 hp, 180 mm frame rated 200 hp, 220 mm frame rated 350 hp, 280 mm frame rated 600 hp, and 334 mm frame rated 900 hp.
- 45 mm open contactors, Sizes A – F, have DIN rail or universal base mounting, 65 mm open contactors have molded feet for panel mounting, and 90 mm to 334 mm have steel mounting plates (optional on smaller sizes).
- DIN rail release mechanism conveniently located on line side of contactor.
- IP20 finger protection shields available.
- Contactor and terminal markings conform to CENELEC EN50011.
- Holding circuit contact(s) supplied as standard:
  - Sizes A – N have a NO auxiliary contact block mounted on right hand side (on Sizes A – C, contact occupies 4th power pole position — no increase in width).
  - Sizes P – S have a NO-NC contact block mounted on the left hand side.
  - Sizes T – Z have a 2NO-2NC contact block mounted on the top left between arc chutes.
- Lugs supplied standard on Sizes A – S. On Sizes T – Z, lugs must be ordered separately.

Reversing

- Highest horsepower rating in a compact, space-saving design, 45 mm frame rated maximum 20 hp, 65 mm frame rated maximum 50 hp and 90 mm frame rated maximum 75 hp at 460V. If larger devices are required, order components.
- 45 mm open type reversing contactors, Sizes A – F, have DIN rail or panel mounting capability. DIN rail release mechanism conveniently located on line side of contactor. A steel mounting plate is optional.
- 65 mm reversing contactors, Sizes G – K and 90 mm Sizes L – N are supplied with steel mounting plate as standard.
- Sizes A – K have a wired NC top mounted electrical interlock on each contactor. Sizes L – N have one NO-NC side mounted electrical interlock on each contactor.

Product Selection — 3-Pole Contactors

When Ordering Specify

- Select required contactor by Catalog Number and replace the magnet coil alpha designation in the Catalog Number (_) with the proper Code Suffix from **Tables 34-324** and **34-326**, on **Page 34-265**.
- For Sizes A – K, the magnet coil alpha designation is the second-to-last digit of the Catalog Number. Example: for a 240V/60 Hz coil, order CE15ANS3**B**B.



IEC Size E
Cat. No. CE15ENS3AB



IEC Size N
Cat. No. CE15NN3A

Table 34-322. Type CE15/CE55 IEC Product Selection — 3-Pole Contactors

Max. UL AC-3 Amp. Rating 600V AC	IEC 947 AC-1 Thermal Current 600V	Maximum kW Rating					Maximum UL Horsepower						3-Pole — Non-reversing ①②		3-Pole — Reversing ③	
		3-Phase					1-Phase		3-Phase				Catalog Number	Price U.S. $	Catalog Number	Price U.S. $
		220V	380V	415/ 440V	500/ 550V	660V	115V	230V	200V	230V	460V	575V				
7	20	1.1	2.2	2.2	4	1.5	1/4	1/2	1-1/2	1-1/2	3	5	**CE15ANS3_B**		**CE55AN3_B**	
10	20	1.5	4	4	5.5	2.2	1/2	1	2	2	5	7-1/2	**CE15BNS3_B**		**CE55BN3_B**	
12	20	2.2	5.5	5.5	7.5	4	1/2	2	3	3	7-1/2	10	**CE15CNS3_B**		**CE55CN3_B**	
18	32	4	7.5	7.5	11	5.5	1	3	5	5	10	15	**CE15DNS3_B**		**CE55DN3_B**	
25	32	5.5	11	11	15	7.5	2	3	5	7-1/2	15	20	**CE15ENS3_B**		**CE55EN3_B**	
32	32	7.5	15	15	18.5	10	2	5	7-1/2	10	20	25	**CE15FNS3_B**		**CE55FN3_B**	
37	50	—	18.5	18.5	22	11	3	5	7-1/2	10	25	30	**CE15GNS3_B**		**CE55GN3_B**	
44	60	11	22	22	30	15	3	7-1/2	10	15	30	40	**CE15HNS3_B**		**CE55HN3_B**	
60	75	15	30	30	30	18.5	5	10	15	20	40	40	**CE15JNS3_B**		**CE55JN3_B**	
73	80	18.5	37	37	37	22	5	10	20	25	50	50	**CE15KNS3_B**		**CE55KN3_B**	
85	100	22	45	45	55	37	7-1/2	10	25	30	60	75	**CE15LN3_**		**CE55LN3_**	
105	135	30	55	55	75	45	10	10	30	40	75	100	**CE15MN3_**		**CE55MN3_**	
140	175	37	75	75	90	45	10	10	40	50	100	125	**CE15NN3_**		**CE55NN3_**	
170	185	45	90	90	90	45	—	—	50	60	125	125	**CE15PN3_**		**—**	
200	220	55	110	110	110	55	—	—	60	75	150	150	**CE15RN3_**		**—**	
300	315	90	160	160	160	75	—	—	75	100	200	200	**CE15SN3_**		**—**	
420	600	129	220	240	300	300	—	—	125	125	250	250	**CE15TN3_80**		**—**	
520	760	160	280	315	375	375	—	—	150	150	350	350	**CE15UN3_80**		**—**	
550	1000	220	375	—	500	500	—	—	150	200	400	400	**CE15VN3_80**		**—**	
700	1000	220	375	—	500	500	—	—	200	250	500	500	**CE15WN3_80**		**—**	
810	1100	270	475	—	600	600	—	—	250	300	600	600	**CE15XN3_80**		**—**	
1215	1350	380	650	—	840	840	—	—	450	450	900	900	**CE15ZN3_80**		**—**	

① IEC Sizes A – N are supplied with a NO auxiliary contact. On IEC Sizes A – C, the 4th power pole position is used as the auxiliary contact and adds no additional width. Open type Sizes A – K can be ordered with a top mounted auxiliary contact instead of a side mounted contact. To order, change the 7th digit of the listed Catalog Number from "**S**" to "**T**". Example: CE15AN**T**3AB. On open type Sizes A – K, if the NO auxiliary contact is not required, drop the "**S**" from the listed Catalog Number.

② Auxiliary contacts: Sizes P – S have 1NO-1NC, Sizes T – X have 2NO-2NC, Size Z has 2NO-1NC. Sizes T – Z are supplied without lugs — order appropriate lug kits from **Table 34-325** on **Page 34-265**.

③ Sizes A – K IEC contactors do not include holding circuit contacts. For factory installed NO auxiliary contacts, insert "**S**" (side mounted) or "**T**" (top mounted) after 6th digit of listed Catalog Number. Example: Change CE55AN3AB to CE55AN**S**3AB. For "T", top mounted NC contact blocks are replaced with NO-NC blocks — for "S", they are replaced with NO-NC side mounted blocks.

Accessories . . . . . **Pages 34-277 – 34-283**
Discount Symbol **1CD7**

Product Selection — 2-, 4- and 5-Pole Contactors

When Ordering Specify

- Select required contactor by Catalog Number and replace the magnet coil alpha designation in the Catalog Number (_) with the proper Code Suffix from the adjacent table.
- For Sizes A – K, the magnet coil alpha designation is the second-to-last digit of the Catalog Number. Example: for a 240V/60 Hz coil, order CE15ANS3**B**B.
- For **DC Magnet Coils**, see Accessories, **Page 34-279**.



IEC Size G
4-Pole Contactor
Cat. No. CE15GN4AB

Table 34-323. Type CE15 IEC Product Selection — 2-, 4- and 5-Pole Contactors — Non-reversing

Max. UL AC-3 Ampere Rating 600V AC	IEC 947 AC-1 Thermal Current 600V	Maximum kW Rating					Maximum UL Horsepower						Catalog Number	Price U.S. $
		3-Phase					1-Phase		3-Phase					
		220V	380V	415/ 440V	500/ 550V	660V	115V	230V	200V	230V	460V	575V		
2-Pole ①														
7	20	1.1	2.2	2.2	4	1.5	1/4	1/2	1-1/2	1-1/2	3	5	**CE15ANS2_B**	
10	20	1.5	4	4	5.5	2.2	1/2	1	2	2	5	7-1/2	**CE15BNS2_B**	
12	20	2.2	5.5	5.5	7.5	4	1/2	2	3	3	7-1/2	10	**CE15CNS2_B**	
18	32	4	7.5	7.5	11	5.5	1	3	5	5	10	15	**CE15DNS2_B**	
25	32	5.5	11	11	15	7.5	2	3	5	7-1/2	15	20	**CE15ENS2_B**	
32	32	7.5	15	15	18.5	10	2	5	7-1/2	10	20	25	**CE15FNS2_B**	
37	50	—	18.5	18.5	22	11	3	5	7-1/2	10	25	30	**CE15GNS2_B**	
44	60	11	22	22	30	15	3	7-1/2	10	15	30	40	**CE15HNS2_B**	
60	75	15	30	30	30	18.5	5	10	15	20	40	40	**CE15JNS2_B**	
73	80	18.5	37	37	37	22	5	10	20	25	50	50	**CE15KNS2_B**	
85	100	22	45	45	55	37	7-1/2	10	25	30	60	75	**CE15LN2_**	
105	135	30	55	55	75	45	10	10	30	40	75	100	**CE15MN2_**	
140	175	37	75	75	90	45	10	10	40	50	100	125	**CE15NN2_**	
4-Pole														
7	20	1.1	2.2	2.2	4	1.5	1/4	1/2	1-1/2	1-1/2	3	5	**CE15AN4_B**	
10	20	1.5	4	4	5.5	2.2	1/2	1	2	2	5	7-1/2	**CE15BN4_B**	
12	20	2.2	5.5	5.5	7.5	4	1/2	2	3	3	7-1/2	10	**CE15CN4_B**	
18	32	4	7.5	7.5	11	5.5	1	3	5	5	10	15	—	
25	32	5.5	11	11	15	7.5	2	3	5	7-1/2	15	20	—	
32	32	7.5	15	15	18.5	10	2	5	7-1/2	10	20	25	—	
37	50	—	18.5	18.5	22	11	3	5	7-1/2	10	25	30	**CE15GN4_B**	
44	60	11	22	22	30	15	3	7-1/2	10	15	30	40	**CE15HN4_B**	
60	75	15	30	30	30	18.5	5	10	15	20	40	40	**CE15JN4_B**	
73	80	18.5	37	37	37	22	5	10	20	25	50	50	—	
5-Pole														
32	32	7.5	15	15	18.5	10	2	5	7-1/2	10	20	25	—	
37	50	—	18.5	18.5	22	11	3	5	7-1/2	10	25	30	**CE15GN5_B**	
44	60	11	22	22	30	15	3	7-1/2	10	15	30	40	**CE15HN5_B**	
60	75	15	30	30	30	18.5	5	10	15	20	40	40	**CE15JN5_B**	
73	80	18.5	37	37	37	22	5	10	20	25	50	50	—	

① Sizes A – N 2-pole contactors are supplied with a NO auxiliary contact. On Sizes A – C, the 4th power pole is used as the auxiliary contact and adds no additional width. Open type Sizes A – K can be ordered with a top mounted auxiliary contact instead of a side mounted contact. To order, change the "**S**" to a "**T**".

For **DC Magnet Coils**, see Accessories, **Page 34-279**.

Accessories . . . . . **Pages 34-277 – 34-283**
Discount Symbol **1CD7**

Table 34-324. AC Coil Suffixes

Coil Volts and Hertz	Code Suffix
120/60 or 110/50	**A**
240/60 or 220/50	**B**
480/60 or 440/50	**C**
600/60 or 550/50	**D**
208/60	**E**
277/60	**H**
208-240/60 ①	**J**
240/50	**K**
380-415/50	**L**
550/50	**N**
380/60	**P**
24/60, 24/50 ②	**T**
24/50	**U**
32/50	**V**
48/60	**W**
48/50	**Y**

① IEC Sizes A – F only.

② IEC Sizes A – F only. Sizes G – V are 24/60 only.

Table 34-325. Line/Load Lug Kits — IEC Sizes T – Z Only

Lugs come standard on all contactors except sizes T – Z. If lugs are required, order separately from below. Each kit consists of three line and three load side lugs and hardware.

Contactor Size	Cable Range	Catalog Number	Price U.S. $
T	(2) #2/0 – 600 kcmil	**C325KAL15**	
U	(2) #2/0 – 600 kcmil	**C325KAL16**	
V – W	(2) #3/0 – 750 kcmil	**C325KAL17**	
X	(3) #3/0 – 750 kcmil	**C325KAL18**	
Z	(4) #1/0 – 750 kcmil	**C325KAL19**	

Table 34-326. DC Coil Suffixes

Contactor or Starter Size — IEC	Volts	NCI Interlock	Code Suffix
Non-reversing			
A – F	12	**C320KGD1**	**R1**
	24	**C320KGD1**	**T1**
	48	**C320KGD1**	**W1**
	120	**C320KGD1**	**A1**
A – F	12	**C320KGD2** ③	**R4**
	24	**C320KGD2** ③	**T4**
	48	**C320KGD2** ③	**W4**
	120	**C320KGD2** ③	**A4**
G – K	12	**C320KGD5**	**R4**
	24	**C320KGD5**	**T4**
	48	**C320KGD5**	**W4**
	120	**C320KGD5**	**A4**
L – N	12	**C320KGD3**	**R1**
	24	**C320KGD3**	**T1**
	48	**C320KGD3**	**W1**
	120	**C320KGD3**	**A1**
P – S	24	**C320KGD3**	**T1B**
	48	**C320KGD3**	**W1B**
	120	**C320KGD3**	**A1B**
	240	**C320KGD3**	**B1B**
Reversing			
A – F	12	**(2) C320KGD1**	**R1** ④
	24	**(2) C320KGD1**	**T1** ④
	48	**(2) C320KGD1**	**W1** ④
	120	**(2) C320KGD1**	**A1** ④
G – K	12	**(2) C320KGD3**	**R1** ④
	24	**(2) C320KGD3**	**T1** ④
	48	**(2) C320KGD3**	**W1** ④
	120	**(2) C320KGD3**	**A1** ④

③ These kits are supplied with a NO/NCI side mounted auxiliary contact in place of the NCI contact.

④ Factory installed DC coils on IEC contactors and starters include a NC top mounted auxiliary contact on each contactor for electrical interlocking.

Discount Symbol **1CD1C**

Contents

Description	*Page*
Product Family Overview	
Product Description	**34-261**
Features	**34-261**
Standards and Certifications	**34-261**
Fixed Heater Starters	
Product Description	**34-266**
Features	**34-266**
Product Selection	**34-267**
Accessories	**34-277**
Auxiliary Contacts	**34-277**
DC Magnet Coils	**34-279**
Renewal Parts	**34-284**

Note: For more information, see CA03402001E.



IEC Size D
Cat. No. AE17DNS0AFE



IEC Size C
Cat. No. AE57CN0AFE

Product Description

Non-reversing

Eaton's Cutler-Hammer® Fixed Heater Starters utilize a Class 10 Bimetallic Overload Relay and are available for 3-phase motor applications from fractional horsepower motors up to 900 hp at 480V.

Reversing

Three-phase, full voltage magnetic starters are used primarily for reversing of 3-phase squirrel cage motors. They consist of two contactors and a single overload relay assembled together. The contactors are mechanically and electrically interlocked to prevent line shorts and energization of both contactors simultaneously.

Features

- **EN60947-4-1 IEC 947-1 Compliance** — new International Standard for low voltage switchgear and control devices.
- UL listed and CSA certified.
- C316 Bimetallic Ambient Compensated Overload Relays — available in three basic sizes covering applications up to 200 hp (150 hp Reversing) — reducing number of different contactor/overload relay combinations that have to be stocked.
- These overload relays feature:
  - Direct heated bimetal elements — Class 10.
  - Single-phase and phase unbalance sensitivity.
  - Ambient temperature compensated.
  - Adjustable trip current.
  - Overload trip indication.
  - Contact test lever.
  - Manual/automatic reset.
  - Electrically isolated NO-NC contacts.
- Long life twin break, silver cadmium oxide contacts — provide excellent conductivity and superior resistance to welding and arc erosion.
- Designed to 2,000,000 electrical operations and 20,000,000 mechanical operations through 20 hp at 460V. Adequate for most general duty motor control applications.

Non-reversing

- Highest horsepower rating in compact, space-saving designs. 45 mm frame rated maximum 20 hp at 460V, 65 mm frame rated maximum 50 hp, 90 mm frame rated maximum 100 hp and 180 mm frame rated maximum 200 hp.
- NO side mounted auxiliary contact supplied as standard on Sizes A – N. Sizes P, R and S have NO-NC.
- 45 mm open type starters, Sizes A – F, have DIN rail or universal base mounting. A steel mounting plate is optional. Sizes G – S supplied with steel mounting plate as standard.
- Four basic starter frame widths — 45 mm, 65 mm, 90 mm and 180 mm — simplifying panel layout.
- 45 mm DIN rail release mechanism conveniently located on line side of starter.

Reversing

- Highest horsepower rating in compact, space-saving designs. 45 mm frame rated maximum 20 hp at 460V, 65 mm frame rated maximum 50 hp at 460V, and 90 mm frame rated a maximum 100 hp at 460V.
- 65 mm reversing starters, Sizes G – K and 90 mm reversing starters Sizes L – N are supplied with steel mounting plate as standard.
- Sizes A – K have a wired NC top mounted electrical interlock on each contactor. Sizes L – N have one NO-NC side mounted electrical interlock on each contactor.

Product Selection

When Ordering Specify

- Select required starter by Catalog Number and replace the magnet coil alpha designation in the Catalog Number (_) with the proper Suffixes from the tables on **Page 34-268**. First, select the Magnet Coil Suffix and then add the two digit Overload Relay Suffix code.
- Example: for a Size A starter for 120V/60 Hz and full load current is 2.0A, order AE17ANS0**AFH**.
- For **DC Magnet Coils**, see Accessories, **Page 34-279**.



IEC Size K
Cat. No. AE17KNS0AKB

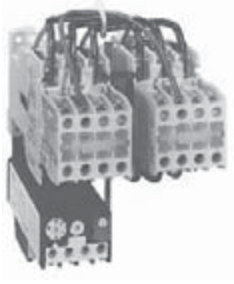

IEC Size E
Cat. No. AE57EN0AFM

Table 34-327. Type AE17/AE57 Starters — Fixed Heater Overload Relay — 3-Pole

Max. UL AC-3 Ampere Rating	IEC 947 AC-1 Thermal Current 600V	Maximum kW Rating					Maximum UL Horsepower						Catalog Number ①	Price U.S. $
		3-Phase					1-Phase		3-Phase					
		220V	380V	415/440V	500/550V	660V	115V	230V	208V	240V	480V	600V		
Non-reversing ②③														
7	20	1.1	2.2	2.2	4	1.5	1/4	1/2	1-1/2	1-1/2	3	5	**AE17ANS0_**	
10	20	1.5	4	4	5.5	2.2	1/2	1	2	2	5	7-1/2	**AE17BNS0_**	
12	20	2.2	5.5	5.5	7.5	4	1/2	2	3	3	7-1/2	10	**AE17CNS0_**	
18	32	4	7.5	7.5	11	5.5	1	3	5	5	10	15	**AE17DNS0_**	
25	32	5.5	11	11	15	7.5	2	3	5	7-1/2	15	20	**AE17ENS0_**	
32	32	7.5	15	15	18.5	10	2	5	7-1/2	10	20	25	**AE17FNS0_**	
37	50	—	18.5	18.5	22	11	3	5	7-1/2	10	25	30	**AE17GNS0_**	
44	60	11	22	22	30	15	3	7-1/2	10	15	30	40	**AE17HNS0_**	
60	75	15	30	30	30	18.5	5	10	15	20	40	40	**AE17JNS0_**	
73	80	18.5	37	37	37	22	5	10	20	25	50	50	**AE17KNS0_**	
85	100	22	45	45	55	37	7-1/2	10	25	30	60	75	**AE17LN0_**	
105	135	30	55	55	75	45	10	10	30	40	75	100	**AE17MN0_**	
140	175	37	75	75	90	45	10	10	40	50	100	125	**AE17NN0_**	
170	185	45	90	90	90	45	—	—	50	60	125	125	**AE17PN0_**	
200	220	55	110	110	110	55	—	—	60	75	150	150	**AE17RN0_**	
300	315	90	160	160	160	75	—	—	75	100	200	200	**AE17SN0_**	
420	600	129	220	240	300	300	—	—	125	125	250	250	**AE17TN0_**	
550	760	160	280	315	375	375	—	—	150	150	350	350	**AE17UN0_**	
630	1000	220	375	—	500	500	—	—	150	200	400	400	**AE17VN0_**	
700	1000	220	375	—	500	500	—	—	200	250	500	500	**AE17WN0_**	
860	1100	270	475	—	600	600	—	—	250	300	600	600	**AE17XN0_**	
1215	1350	380	650	—	—	840	—	—	450	450	900	900	**AE17ZN0_**	
Reversing ④														
7	20	1.1	2.2	2.2	4	1.5	1/4	1/2	1-1/2	1-1/2	3	5	**AE57AN0_**	
10	20	1.5	4	4	5.5	2.2	1/2	1	2	2	5	7-1/2	**AE57BN0_**	
12	20	2.2	5.5	5.5	7.5	4	1/2	2	3	3	7-1/2	10	**AE57CN0_**	
18	32	4	7.5	7.5	11	5.5	1	3	5	5	10	15	**AE57DN0_**	
25	32	5.5	11	11	15	7.5	2	3	5	7-1/2	15	20	**AE57EN0_**	
32	32	7.5	15	15	18.5	10	2	5	7-1/2	10	20	25	**AE57FN0_**	
37	50	—	18.5	18.5	22	11	3	5	7-1/2	10	25	30	**AE57GN0_**	
44	60	11	22	22	30	15	3	7-1/2	10	15	30	40	**AE57HN0_**	
60	75	15	30	30	30	18.5	5	10	15	20	40	40	**AE57JN0_**	
73	80	18.5	37	37	37	22	5	10	20	25	50	50	**AE57KN0_**	
85	100	22	45	45	55	37	7-1/2	10	25	30	60	75	**AE57LN0_**	
105	135	30	55	55	75	45	10	10	30	40	75	100	**AE57MN0_**	
140	175	37	75	75	90	45	10	10	40	50	100	125	**AE57NN0_**	

① Underscore (_) indicates Magnet Coil Suffix and Overload Relay Suffix code.

② IEC Sizes A – K are supplied with a NO auxiliary contact. On IEC Sizes A – C, the 4th power pole position is used as the auxiliary contact and adds no additional width. Open type sizes A – K can be ordered with a top mounted auxiliary contact instead of a side mounted contact. To order, change the 7th digit of the listed Catalog Number from "**S**" to "**T**". Example: AE17AN**T**0AFC. On open type sizes A – K, if the NO auxiliary contact is not required, drop the "**S**" from the listed Catalog Number. Example: AE17AN0AFC. IEC Sizes L – N open are supplied with a NO side mounted auxiliary contact. On IEC Sizes P – S, a NO-NC side mounted is standard. Sizes T – X have 2NO-2NC, Size Z has 2NO-1NC.

③ Starters include fixed heater overload relay. AE17 is only an ordering number. Assembled starter consists of individually marked CE15 contactor and C316 overload relay.

④ Sizes A – K IEC starters do not include holding circuit contacts. For factory installed NO auxiliary contacts, insert "**S**" (side mounted) or "**T**" (top mounted) after 6th digit of listed Catalog Number. Example: Change AE57AN0AFC to AE57AN**S**0AFC. For "T", top mounted NC contact blocks are replaced with NO-NC blocks — for "S", they are replaced with NO-NC side mounted blocks.

Accessories . . . . . **Pages 34-277 – 34-283**
Discount Symbol **1CD7**

Table 34-328. Maximum Horsepower Rating of Starters for 380V 50 Hz Application

IEC Size	A	B	C	D	E	F	G	H	J	K	L	M	N	P	R	S
hp	3	5	5	10	10	15	20	25	30	40	50	60	75	100	125	150

Table 34-329. AC Coil Suffixes

Coil Volts and Hertz	Code Suffix
120/60 or 110/50	**A**
240/60 or 220/50	**B**
480/60 or 440/50	**C**
600/60 or 550/50	**D**
208/60	**E**
277/60	**H**
208-240/60 ①	**J**
240/50	**K**
380-415/50	**L**
550/50	**N**
24/60, 24/50 ②	**T**
24/50	**U**
32/50	**V**
48/60	**W**
48/50	**Y**

① IEC Sizes A – F only.
② IEC Sizes A – F only. Sizes G – V are 24/60 only.

For **DC Magnet Coils**, see Accessories, **Page 34-279**.

Table 34-330. Fixed Heater Overload Relay Suffix Codes ③

Motor Full Load Amperes	Suffix Letter	Motor Full Load Amperes	Suffix Letter
Sizes AE17A – AE17F			
.25 – .40	**FC**	3.5 – 5.0	**FL**
.40 – .63	**FD**	4.5 – 6.5	**FM**
.63 – 1.0	**FE**	6.0 – 8.5	**FN**
1.0 – 1.4	**FF**	7.5 – 11	**FP**
1.3 – 1.8	**FG**	10 – 14	**FQ**
1.7 – 2.4	**FH**	13 – 19	**FR**
2.2 – 3.1	**FJ**	18 – 24	**FS**
2.8 – 4.0	**FK**	24 – 32	**FT**
Sizes AE17G – AE17K			
18 – 25	**KA**	36 – 52	**KD**
22 – 32	**KB**	45 – 63	**KE**
29 – 42	**KC**	60 – 80	**KF**
Sizes AE17L – AE17N			
65 – 90	**PA**	110 – 150	**PD**
80 – 100	**PB**	130 – 175	**PE**
100 – 135	**PC**	—	**—**
Sizes AE17P – AE17S with 300/5 CT			
60 – 84	**FF**	132 – 186	**FJ**
78 – 108	**FG**	168 – 240	**FK**
102 – 144	**FH**	210 – 300	**FL**
Sizes AE17T – AE17V with 600/5 CT			
120 – 168	**FF**	264 – 372	**FJ**
156 – 216	**FG**	336 – 480	**FK**
204 – 288	**FH**	420 – 600	**FL**
Sizes AE17W – AE17X with 1000/5 CT			
200 – 280	**FF**	440 – 620	**FJ**
260 – 360	**FG**	560 – 800	**FK**
340 – 480	**FH**	700 – 1000	**FL**
Size AE17Z with 1500/5 CT			
300 – 420	**FH**	660 – 930	**FJ**
390 – 540	**FG**	840 – 1200	**FK**
510 – 720	**FH**	1050 – 1500	**FL**

③ Overload relay range can not exceed contactor ampere rating.

Contents

Description	*Page*
Product Family Overview	
Product Description	**34-261**
Features	**34-261**
Standards and Certifications	**34-261**
Fixed Heater Overload Relays	
Product Description	**34-269**
Features	**34-269**
Standards and Certifications	**34-269**
Accessories	**34-269**
Product Selection	**34-269**
Accessories	**34-277**
Auxiliary Contacts	**34-277**
DC Magnet Coils	**34-279**
Renewal Parts	**34-284**

Note: For more information, see CA03402001E.

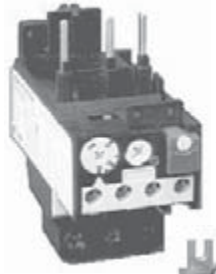

Frame Size F Overload Relay Cat. No. C316FNA3

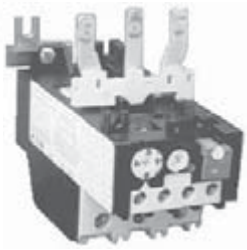

Frame Size K Overload Relay Cat. No. C316KNA3

Product Description

Eaton's Cutler-Hammer® Integral Overload Relays are for use with Freedom Series contactors. They are designed and manufactured to meet IEC (International Electrotechnical Commission) recommendations and other international standards necessary for acceptance in many countries around the world.

Features

- **EN60947-4-1 IEC 947-4-1 Compliance** — the International Standard for low voltage switchgear and control devices.
- Direct heated bimetal elements.
- Class 10 trip characteristics through 200 amperes and Class 30 on 400 and 850 ampere relays.
- Single-phase and phase unbalance sensitive.
- Ambient temperature compensated.
- Adjustable trip current, overload trip indication.
- NO-NC electrically isolated contacts, contact test lever.
- Manual/automatic reset.
- DIN rail and panel mounting adapter.

Standards and Certifications

- UL listed — File E130332
- CSA certified — File LR15332M94

Table 34-331. Overload Configurations — C316 Overload

Size		Mounting Arrangements
Overload	**Contactor**	
F	A – F	Connecting links are provided for close coupling. For independent mounting, an accessory kit **C306TB1** is required.
K	G – K	Connecting links are provided for close coupling. For independent mounting, an accessory kit **C316TB1** is required which replaces the connectors and repositions the calibration marks with an additional label.
P	L – N	Connecting links are provided for close coupling with a calibration label to reposition the marks.

Accessories

Table 34-332. Accessories

Description	Application	Catalog Number	Price U.S. $
DIN Rail and Panel Mounting Adapters — for separate mounting of overload relays	Frame Size C316F Frame Size C316K	**C306TB1** **C316TB1**	

Product Selection

Freedom Series Integral Overload Relays

Table 34-333. Bimetal Class 10 — IEC Sizes A – F

Trip Class	Motor FLA	Manual/Automatic Reset NO-NC Electrically Separated	
		Catalog Number	**Price U.S. $**
For IEC Contactor Sizes A – F			
10	.25 – .40	**C316FNA3C**	
	.40 – .63	**C316FNA3D**	
	.63 – 1.00	**C316FNA3E**	
	1.00 – 1.40	**C316FNA3F**	
	1.30 – 1.80	**C316FNA3G**	
	1.70 – 2.40	**C316FNA3H**	
	2.20 – 3.10	**C316FNA3J**	
	2.80 – 4.00	**C316FNA3K**	
	3.50 – 5.00	**C316FNA3L**	
	4.50 – 6.50	**C316FNA3M**	
	6.00 – 8.50	**C316FNA3N**	
	7.50 – 11.0	**C316FNA3P**	
	10.0 – 14.0	**C316FNA3Q**	
	13.0 – 19.0	**C316FNA3R**	
	18.0 – 24.0	**C316FNA3S**	
	24.0 – 32.0	**C316FNA3T**	

Table 34-334. Bimetal Class 10 — IEC Sizes G – K and IEC Sizes L – S

Trip Class	Motor FLA	Manual/Automatic Reset NO-NC Electrically Separated	
		Catalog Number	**Price U.S. $**
For IEC Contactor Sizes G – K			
10	18.0 – 25.0	**C316KNA3A**	
	22.0 – 32.0	**C316KNA3B**	
	29.0 – 42.0	**C316KNA3C**	
	36.0 – 52.0	**C316KNA3D**	
	45.0 – 63.0	**C316KNA3E**	
	60.0 – 80.0	**C316KNA3F**	
For IEC Contactor Sizes L – N			
10	65 – 90	**C316PNA3A**	
	80 – 100	**C316PNA3B**	
	100 – 135	**C316PNA3C**	
	110 – 150	**C316PNA3D**	
	130 – 175	**C316PNA3E**	
	150 – 200	**C316PNA3F**	

Discount Symbol **1CD7**

Contents

Description	*Page*
Product Family Overview	
Product Description	**34-261**
Features	**34-261**
Standards and Certifications	**34-261**
Interchangeable Heater Starters	
Product Description	**34-270**
Features	**34-270**
Product Selection	**34-271**
Accessories	**34-277**
Auxiliary Contacts	**34-277**
DC Magnet Coils	**34-279**
Renewal Parts	**34-284**

Note: For more information, see CA03402001E.



IEC Size D
Cat. No. AE16DN0BC

Product Description

Non-reversing

IEC Freedom Series Starters utilize an Interchangeable Heater Pack Overload Relay which allows increased flexibility. Starters are available to cover 3-phase motors with fractional horsepower ratings up to 900 hp at 480V.

Reversing

Three-phase, full voltage magnetic starters are used primarily for reversing of 3-phase squirrel cage motors. They consist of two contactors and a single overload relay assembled together. The contactors are mechanically and electrically interlocked to prevent line shorts and energization of both contactors simultaneously.

Features

- **EN60947-4-1 IEC 947-4-1 Compliance** — International Standard for low voltage switchgear and control devices.
- UL listed and CSA certified.
- Bimetallic Ambient Compensated Overload Relays — available in three basic sizes covering applications up to 200 hp (100 hp Reversing) — reducing number of different contactor/overload relay combinations that have to be stocked.

  These overload relays feature:
  - ❑ Selectable Manual or Automatic Reset operation.
  - ❑ Interchangeable Heater Packs adjustable ±24% to match motor FLA and calibrated for 1.0 and 1.15 service factors. Heater packs for smaller overload relay will mount in larger overload relay — useful in derating applications such as jogging.
  - ❑ Meets UL508 Single-Phasing requirements, Class 20 or Class 10 trip time.
  - ❑ Overload trip indication.
  - ❑ Electrically isolated NO-NC contacts (pull RESET button to test).
- Long life twin break, silver cadmium oxide contacts — provide excellent conductivity and superior resistance to welding and arc erosion.
- Designed to 2,000,000 electrical and 20,000,000 mechanical operations through 20 hp at 460V. Adequate for most general duty motor control applications.

Non-reversing

- Highest horsepower rating in compact, space-saving designs, 45 mm frame rated maximum 20 hp at 460V, 65 mm frame rated maximum 50 hp, 90 mm frame rated maximum 100 hp, and 180 mm rated maximum 200 hp.
- IP20 finger protection shields available.
- Contactor and terminal markings conform to CENELEC EN50011.
- One NO right-side mounted auxiliary contact supplied as standard on Sizes A – N (on Sizes A – C, contact occupies 4th power pole — no increase in width). Sizes P – S have NO-NC.
- 45 mm open type starters, sizes A – F, have DIN rail or universal base mounting. DIN rail release mechanism conveniently located on line side of starter. A steel mounting plate is optional.
- 65 mm starters, sizes G – K; 90 mm starters, sizes L – N; and P – S 180 mm supplied with steel mounting plate as standard.
- Four basic starter frame widths — 45 mm, 65 mm, 90 mm and 180 mm — simplifying panel layout.

Reversing

- Highest horsepower rating in compact, space-saving designs. 45 mm frame rated maximum 20 hp at 460V, 65 mm frame rated maximum 50 hp, and 90 mm frame rated maximum 100 hp.
- 45 mm open type reversing starters, Sizes A – F, have DIN rail or universal base mounting. DIN rail release mechanisms conveniently located on line side of starters. A steel mounting plate is optional.
- 65 mm reversing starters, Sizes G – K, and 90 mm reversing starters, Sizes L – N, are supplied with steel mounting plate as standard.
- Sizes A – K have a wired NC top mounted electrical interlock on each contactor. Sizes L – N have one NO-NC side mounted electrical interlock on each contactor.
- A full time of snap-on accessories — top and side mounted auxiliary contacts, solid-state and pneumatic timers, etc.
- Straight-through wiring — line lugs at top, load lugs at bottom.
- Horizontal of vertical mounting on upright panel for application freedom.
- Screw type power terminals have captive, backed-out self-lifting pressure plates with ± screws — reducing wiring time.

Product Selection

When Ordering Specify

- Select required starter by Catalog Number and replace the magnet coil alpha designation in the Catalog Number (_) with the proper Code Suffix from **Table 34-338** on **Page 34-272**.
- Example: for a Size B starter with a 480V/60 Hz coil, order AE16BNS0CC.
- For **DC Magnet Coils**, see Accessories, **Page 34-279**.

Table 34-335. Type AE16/AE56 Starters — Interchangeable Heater Overload Relay — 3-Pole — Non-reversing ①

Max. UL AC-3 Ampere Rating	IEC 947 AC-1 Thermal Current 600V	Maximum kW Rating					Maximum UL Horsepower						Catalog Number	Price U.S. $
		3-Phase					1-Phase		3-Phase					
		220V	380V	415/ 440V	500/ 550V	660V	115V	230V	208V	240V	480V	600V		
7	20	1.1	2.2	2.2	4	1.5	1/4	1/2	1-1/2	1-1/2	3	5	**AE16ANS0_C**	
10	20	1.5	4	4	5.5	2.2	1/2	1	2	2	5	7-1/2	**AE16BNS0_C**	
12	20	2.2	5.5	5.5	7.5	4	1/2	2	3	3	7-1/2	10	**AE16CNS0_C**	
18	32	4	7.5	7.5	11	5.5	1	3	5	5	10	15	**AE16DNS0_C**	
25	32	5.5	11	11	15	7.5	2	3	5	7-1/2	15	20	**AE16ENS0_C**	
32	32	7.5	15	15	18.5	10	2	5	7-1/2	10	20	25	**AE16FNS0_C**	
37	50	—	18.5	18.5	22	11	3	5	7-1/2	10	25	30	**AE16GNS0_B**	
44	60	11	22	22	30	15	3	7-1/2	10	15	30	40	**AE16HNS0_B**	
60	75	15	30	30	30	18.5	5	10	15	20	40	40	**AE16JNS0_B**	
73	80	18.5	37	37	37	22	5	10	20	25	50	50	**AE16KNS0_B**	
85	100	22	45	45	55	37	7-1/2	10	25	30	60	75	**AE16LN0_**	
105	135	30	55	55	75	45	10	10	30	40	75	100	**AE16MN0_**	
140	175	37	75	75	90	45	10	10	40	50	100	125	**AE16NN0_**	
170	185	45	90	90	90	45	—	—	50	60	125	125	**AE16PN0_**	
200	220	55	110	110	110	55	—	—	60	75	150	150	**AE16RN0_**	
300	315	90	160	160	160	75	—	—	75	100	200	200	**AE16SN0_**	
450	600	129	220	240	300	300	—	—	125	125	250	250	**AE16TN0_**	
550	760	160	280	315	375	375	—	—	150	150	350	350	**AE16UN0_**	
630	1000	220	375	—	500	500	—	—	150	200	400	400	**AE16VN0_**	
700	1000	220	375	—	500	500	—	—	200	250	500	500	**AE16WN0_**	
860	1100	270	475	—	600	600	—	—	250	300	600	600	**AE16XN0_**	
1215	1350	380	650	—	840	840	—	—	450	450	900	900	**AE16ZN0_**	

① IEC Sizes A – N, open are supplied with a NO auxiliary contact. On IEC Sizes A – C, the 4th power pole position is used as the auxiliary contact and adds no additional width. Open type Sizes A – K can be ordered with a top mounted auxiliary contact instead of a side mounted contact. To order, change the 7th digit of the listed Catalog Number from "**S**" to "**T**". Example: AE16AN**T**0AC. On open type Sizes A – K, if the NO auxiliary contact is not required, drop the "**S**" from the listed Catalog Number. Example: AE16AN0AC. On IEC Sizes P – S, a NO-NC side mounted is standard. Sizes T – X have 2NO-2NC, Size Z has 2NO-1NC.

Accessories . . . . . **Pages 34-277 – 34-283**
Discount Symbol **1CD7**

34

When Ordering Specify

- Select required starter by Catalog Number and replace the magnet coil alpha designation in the Catalog Number (_) with the proper Code Suffix from **Table 34-338** below.
- Example: for a Size B starter with a 480V/60 Hz coil, order AE16BNS0CC.
- For **DC Magnet Coils**, see Accessories, **Page 34-279**.



IEC Size F
Cat. No. AE56DN0BC



IEC Size G
Cat. No. AE56GN0BB

Table 34-336. Type AE16/AE56 Starters — Interchangeable Heater Overload Relay — 3-Pole — Reversing ①

Max. UL AC-3 Ampere Rating	IEC 947 AC-1 Thermal Current 600V	Maximum kW Rating					Maximum UL Horsepower						Catalog Number	Price U.S. $
		3-Phase					1-Phase		3-Phase					
		220V	380V	415/ 440V	500/ 550V	660V	115V	230V	208V	240V	480V	600V		
7	20	1.1	2.2	2.2	4	1.5	1/4	1/2	1-1/2	1-1/2	3	5	**AE56AN0_C**	
10	20	1.5	4	4	5.5	2.2	1/2	1	2	2	5	7-1/2	**AE56BN0_C**	
12	20	2.2	5.5	5.5	7.5	4	1/2	2	3	3	7-1/2	10	**AE56CN0_C**	
18	32	4	7.5	7.5	11	5.5	1	3	5	5	10	15	**AE56DN0_C**	
25	32	5.5	11	11	15	7.5	2	3	5	7-1/2	15	20	**AE56EN0_C**	
32	32	7.5	15	15	18.5	10	2	5	7-1/2	10	20	25	**AE56FN0_C**	
37	50	—	18.5	18.5	22	11	3	5	7-1/2	10	25	30	**AE56GN0_B**	
44	60	11	22	22	30	15	3	7-1/2	10	15	30	40	**AE56HN0_B**	
60	75	15	30	30	30	18.5	5	10	15	20	40	40	**AE56JN0_B**	
73	80	18.5	37	37	37	22	5	10	20	25	50	50	**AE56KN0_B**	
85	100	22	45	45	55	37	7-1/2	10	25	30	60	75	**AE56LN0_**	
105	135	30	55	55	75	45	10	10	30	40	75	100	**AE56MN0_**	
140	175	37	75	75	90	45	10	10	40	50	100	125	**AE56NN0_**	

① Sizes A – K IEC starters do not include holding circuit contacts. For factory installed NO auxiliary contacts, insert "**S**" (side mounted) or "**T**" (top mounted) after 6th digit of listed Catalog Number. Example: Change AE56AN0AC to AE56AN**S**0AC. For "T", top mounted NC contact blocks are replaced with NO-NC blocks — for "S", they are replaced with NO-NC side mounted blocks.

Table 34-337. Maximum Horsepower Rating of Starters for 380V 50 Hz Application

IEC Size	A	B	C	D	E	F	G	H
hp	3	5	5	10	10	15	20	25

IEC Size	J	K	L	M	N	P	R	S
hp	30	40	50	60	75	100	125	150

Table 34-338. AC Coil Suffixes

Coil Volts and Hertz	Code Suffix
120/60 or 110/50	**A**
240/60 or 220/50	**B**
480/60 or 440/50	**C**
600/60 or 550/50	**D**
208/60	**E**
277/60	**H**
208-240/60 ②	**J**
240/50	**K**
380-415/50	**L**
550/50	**N**
24/60, 24/50 ③	**T**
24/50	**U**
32/50	**V**
48/60	**W**
48/50	**Y**

② IEC Sizes A – F only.
③ IEC Sizes A – F only. Sizes G – V are 24/60 only.

For **DC Magnet Coils**, see Accessories on **Page 34-279**.

Accessories . . . . . **Pages 34-277 – 34-283**
Discount Symbol **1CD7**

Contents

Description	*Page*
Product Family Overview	
Product Description	**34-261**
Features	**34-261**
Standards and Certifications	**34-261**
Interchangeable Heater Overload Relays	
Product Description	**34-273**
Features	**34-273**
Standards and Certifications	**34-273**
Factory Modifications	**34-273**
Accessories	**34-273**
Replacement Parts	**34-274**
Product Selection	**34-275**
Heater Pack Selection	**34-275**
Accessories	**34-277**
Auxiliary Contacts	**34-277**
DC Magnet Coils	**34-279**
Renewal Parts	**34-284**

Note: For more information, see CA03402001E.

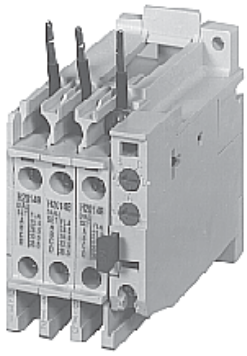

32 Ampere Overload
Cat. No. C306DN3B

Product Description

C306 Overload Relays are designed for use with CE or CN non-reversing and reversing contactors. Four sizes are available for overload protection up to 144 amperes.

Features

- Selectable manual or automatic reset operation.
- Interchangeable heater packs adjustable ±24% to match motor FLA and calibrated for use with 1.0 and 1.15 service factor motors.
  - Heater packs for 32 ampere overload relay will mount in 75 ampere overload relay — useful in derating applications such as jogging.
- Class 10 or 20 heater packs.
- Load lugs built into relay base.
- Bimetallic, ambient compensated operated. Trip free mechanism.
- Electrically isolated NO-NC contacts (pull RESET button to test).
- Overload trip indication.
- Shrouded or "fingerproof" terminals to reduce possibility of electrical shock.
- Meets UL508 single-phasing requirements.

Standards and Certifications

- UL listed
- CSA certified
- NEMA compliance and EN60947-4-1 IEC 947-4-1 and (CE) Mark

Factory Modifications



Cat. No. C306TB1

Table 34-339. C306 Thermal Overload Relays with Mounting Adapter

Consists of a thermal overload relay mounted to a terminal base adapter — permits fast and easy installation.		
Description	**Catalog Number**	**Price U.S. $**
C306DN3B + C306TB1 C306GN3B + C306TB2B	**C306DT3B** **C306GT3B**	

Accessories

Table 34-340. DIN Rail and Panel Mounting Adapter

These adapters are required when component overload relays are to be separately mounted. The terminal base adapter includes line terminals and connects with the overload relays listed in **Table 34-339**.		
Description	**Catalog Number**	**Price U.S. $**
For 32 Ampere Overload Relay For 75 Ampere Overload Relay	**C306TB1** **C306TB2B** ①	

① This Series "B" adapter will accept Series "A" or "B" overload relays (C306GN3 or C306GN3B). C306TB2 can only be used with C306GN3.

Discount Symbol **1CD1C**



Table 34-341. Locking Cover for Overload Relay — C306 Only

Snap-on transparent or opaque plastic panel for covering access port to the overload relay trip setting dial — helps prevent accidental or unauthorized changes to trip and reset setting.			
Description	**Min. Order Quantity (Std. Pkg.)**	**Catalog Number**	**Price U.S. $**
Clear cover, no accessibility	50	**C320PC3**	
Gray cover, no accessibility, with Auto only nib	50	**C320PC4**	
Gray cover, no accessibility, with Manual only nib	50	**C320PC5**	
Gray cover with FLA dial accessibility, A, B, C, D positions and Auto only nib	50	**C320PC6**	
Gray cover with FLA dial accessibility, A, B, C, D positions and Manual only nib	50	**C320PC7**	

Overload Lug Adapter Kit



Cat. No. C306KAL1-3 Overload Relay Lug Adapter Kit

These kits are used in conjunction with Catalog Numbers H2001B – H2014B or H2101B – H2114B heater packs as a means of utilizing these Series "B" heater packs in Catalog Numbers C306DN3 and C306GN3 Series "A1" overload relays. The kit consists of 3 lug adapters and installation instructions. When installing Series "B" heater packs plus lug adapters in Series "A" overload relays, refer to heater pack FLA adjustment tables originally supplied with equipment (also supplied with kit).

Table 34-342. Product Selection

Description	Catalog Number	Price U.S. $
Series "A1" Overload Relay Lug Adapter Kit	**C306KAL1-3B**	

Replacement Parts

Heater Pack Replacement

The heater pack series is determined by the 6th character of the Catalog Number. Series A or prior heater packs (identified by either "A" or "-" as the 6th character) have built-in load lugs. Series B or later heater packs do not (load lugs are on overload relay). Replacement of Series A or earlier heater packs with Series B or later heater packs, requires the one time addition of Lug Adapter Kit C3606KAL1-3B to the Series A1 overload relay.



Superseded Series A Heater Pack



Series B Heater Pack

Table 34-343. Heater Pack Replacement Requirements

Existing Heater Pack Catalog Numbers	Replacement Product Required
H2001-3 – H2013-3 **H2001A-3 – H2013A-3**	Lug Adapter Kit C3606KAL1-3B and Series B Heater Pack
H2001B-3 – H2013B-3	Series B Heater Pack
H2014-3 **H2014A-3**	When inventory is exhausted, replace with Lug Adapter Kit C3606KAL1-3B and Series B Heater Pack
H2014B-3	Series B Heater Pack
H2015-3 – H2017-3	When inventory is exhausted, replace with heater pack chosen from **Table 34-346**
H2015A-3 – H2017A-3	When inventory is exhausted, replace with Lug Adapter Kit C3606KAL1-3B and Series B Heater Pack
H2015B-3 – H2017B-3	Series B Heater Pack

Table 34-344. Heater Pack Ratings

Motor Full Load Ampere Rating				Order Heater Pack Catalog Number	Price U.S. $
Dial Position					
A	B	C	D		
29.0 39.6 53.9	32.5 44.3 60.4	36.0 49.1 66.8	39.5 53.8 74.9	**H2015A-3** **H2016A-3** **H2017A-3**	

Overload Relay Replacement — Series "A" Only

When replacing a Catalog Number C306DN3 (Part Number 10-6044) or C306GN3 (10-6319) Series "A" overload relay on a starter, order a Series "B" overload relay and Series "B" heater packs.



Superseded 32 Ampere Series "A" Overload Relay Cat. No. C306DN3



Superseded 75 Ampere Series "A" Overload Relay Cat. No. C306GN3

Discount Symbol **1CD1C**

Product Selection



32A Overload
Cat. No. C306DN3B

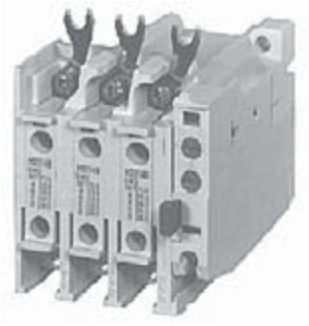

75A Overload
Cat. No. C306GN3B

Table 34-345. C306 Thermal Overload Relays

For Use with Freedom Series Contactors		Maximum Ampere Rating	Number of Poles	Open Type		Open Type with Adapter for DIN Rail or Panel Mount		NEMA 1 Enclosed	
NEMA	IEC			Catalog Number	Price U.S. $	Catalog Number	Price U.S. $	Catalog Number	Price U.S. $
00, 0	A – F	32 ②	3	**C306DN3B**		**C306DT3B**		**C306DG3B**	
1, 2	G – K	75 ②	3	**C306GN3B**		**C306GT3B**		**C306GG3B**	
3	L – M	105 ③	3	**C306KN3**		—		—	
4	N	144 ③	3	**C306NN3**		—		—	
5 – 8 ①	—	—	—	—		—		—	

① NEMA Sizes 5 – 8 use the 32 ampere overload in conjunction with CTs.
② Series "B" overload relays have load lugs built into relay base and will only accept Series "B" heater packs. These relays can be directly attached to contactor or they can be DIN rail mounted using adapter on **Page 34-273**.
③ These relays can be panel mounted only.

Heater Pack Selection



Heater Pack
H2001B – H2017B



Heater Pack
H2101B – H2117B

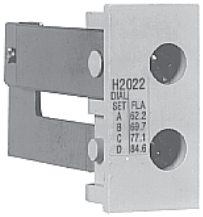

Heater Pack
H2018 – H2024

Heater packs H2001B to H2017B and H2101B to H2117B are to be used only with Series B overload relays Catalog Numbers C306DN3B (Part No. 10-7016) and C306GN3B (Part No. 10-7020). The load lugs are built into the overload relay base to allow load wiring prior to heater pack installation. The previous heater design had integral load lugs. The Series B heater packs are electrically equivalent to the previous heater design. Heaters H2018-3 to H2024-3 have not changed.

Table 34-346. Starters with Series B Overload Relays

NEMA — AN Type		IEC — AE Type	
Size	Series	Size	Series
00 – 0	**C**	A – F	**C**
1 – 2	**B**	G – K	**B**
5	**B**		
6	**C**		
7 – 8	**B**		

Note: The series of a starter is the last digit of the listed Catalog Number. EXAMPLE: AE16DN0A**B**.

Discount Symbol **1CD1C**

34

Table 34-347. Standard Trip — Class 20

Overload Relay Size	Motor Full Load Ampere Rating — Dial Position A	B	C	D	Catalog Number (Includes 3 Heater Packs)	Price U.S. $
For Use with NEMA Sizes 00 – 0 Series C, NEMA Sizes 1 – 2 Series B; IEC Sizes A – F Series C, IEC Sizes G – K Series B						
32A or 75A	.254	.306	.359	.411	**H2001B-3**	
	.375	.452	.530	.607	**H2002B-3**	
	.560	.676	.791	.907	**H2003B-3**	
	.814	.983	1.15	1.32	**H2004B-3**	
	1.20	1.45	1.71	1.96	**H2005B-3**	
	1.79	2.16	2.53	2.90	**H2006B-3**	
	2.15	2.60	3.04	3.49	**H2007B-3**	
	3.23	3.90	4.56	5.23	**H2008B-3**	
	4.55	5.50	6.45	7.40	**H2009B-3**	
	6.75	8.17	9.58	11.0	**H2010B-3**	
	9.14	10.8	12.4	14.0	**H2011B-3**	
	14.0	16.9	19.9	22.8	**H2012B-3**	
	18.7	22.7	26.7	30.7	**H2013B-3**	
	23.5	28.5	33.5	38.5	**H2014B-3**	
For Use with NEMA Size 2, IEC Sizes G – K Only — Series B						
75A	29.0	34.0	39.1	44.1	**H2015B-3**	
	39.6	45.5	51.5	57.4	**H2016B-3**	
	53.9	60.9	67.9	74.9	**H2017B-3**	
For Use with NEMA Sizes 3 – 4, IEC Sizes L – N Only — Series A						
105A or 144A	8.0	9.2	10.3	11.5	**H2025-3**	
	11.4	12.8	14.3	15.7	**H2026-3**	
	14.3	15.7	17.4	19.0	**H2027-3**	
	18.0	20.2	22.3	24.5	**H2018-3**	
	24.6	27.6	30.5	33.4	**H2019-3**	
	33.5	37.5	41.5	45.6	**H2020-3**	
	45.7	51.2	56.7	62.1	**H2021-3**	
	62.2	69.7	77.1	84.6	**H2022-3**	
	84.7	95.0	105.0	115.0	**H2023-3**	
	106.0	118.0	131.0	144.0	**H2024-3**	
For Use with Size 5 Starters — Series B and IEC P, R and S with 300/5 CT						
32A ①	49	59	69	79	**H2004B-3**	
	72	87	103	118	**H2005B-3**	
	107	130	152	174	**H2006B-3**	
	129	156	182	209	**H2007B-3**	
	194	234	274	—	**H2008B-3**	
For Use with Size 6 Starters Only — Series B and IEC T – V with 600/5 CT						
32A ①	144	174	205	235	**H2005B-3**	
	215	259	304	348	**H2006B-3**	
	258	312	365	419	**H2007B-3**	
	388	468	547	627	**H2008B-3**	
For Use with Size 7 Starters Only — Series B and IEC W – X with 1000/5 CT						
32A ①	163	197	230	264	**H2004B-3**	
	240	290	342	392	**H2005B-3**	
	358	432	506	580	**H2006B-3**	
	430	520	608	698	**H2007B-3**	
	646	780	912	—	**H2008B-3**	
For Use with Size 8 Starters Only — Series B and IEC Z with 1500/5 CT						
32A ①	244	295	345	396	**H2004B-3**	
	360	435	513	588	**H2005B-3**	
	537	648	759	870	**H2006B-3**	
	645	780	912	1047	**H2007B-3**	
	969	1170	1368	—	**H2008B-3**	

① Sizes 5 – 8 and IEC P – Z use the 32A overload relay with current transformers.

Table 34-348. Fast Trip — Class 10

Overload Relay Size	Motor Full Load Ampere Rating — Dial Position A	B	C	D	Catalog Number (Includes 3 Heater Packs)	Price U.S. $
For Use with NEMA Sizes 00 – 0 Series C, NEMA Sizes 1 – 2 Series B; IEC Sizes A – F Series C, IEC Sizes G – K Series B						
32A or 75A	.260	.313	.367	.420	**H2101B-3**	
	.384	.464	.543	.623	**H2102B-3**	
	.570	.688	.806	.924	**H2103B-3**	
	.846	1.02	1.20	1.37	**H2104B-3**	
	1.28	1.55	1.83	2.10	**H2105B-3**	
	1.92	2.33	2.74	3.15	**H2106B-3**	
	2.30	2.79	3.28	3.77	**H2107B-3**	
	3.38	4.10	4.82	5.54	**H2108B-3**	
	4.96	6.03	7.09	8.16	**H2109B-3**	
	7.07	8.58	10.1	11.6	**H2110B-3**	
	9.60	11.2	12.8	14.4	**H2111B-3**	
	14.4	17.5	20.7	23.8	**H2112B-3**	
	18.7	21.8	25.0	28.1	**H2113B-3**	
	23.5	27.3	31.0	34.8	**H2114B-3**	
For Use with NEMA Size 2, IEC Sizes G – K Only — Series B						
75A	28.3	32.6	37.0	41.3	**H2115B-3**	
	36.6	42.3	48.1	53.8	**H2116B-3**	
	53.8	60.8	67.9	74.9	**H2117B-3**	
For Use with Size 5 Starters Only — Series B and IEC P, R and S with 300/5 CT						
32A ②	51	61	72	82	**H2104B-3**	
	77	93	110	126	**H2105B-3**	
	115	140	164	189	**H2106B-3**	
	138	167	197	226	**H2107B-3**	
	203	246	289	—	**H2108B-3**	
For Use with Size 6 Starters Only — Series B and IEC T – V with 600/5 CT						
32A ②	154	186	220	252	**H2105B-3**	
	230	280	329	378	**H2106B-3**	
	276	335	394	452	**H2107B-3**	
	406	492	578	—	**H2108B-3**	
For Use with Size 7 Starters Only — Series B and IEC W – X with 1000/5 CT						
32A ②	169	204	240	274	**H2104B-3**	
	256	310	366	420	**H2105B-3**	
	384	466	543	630	**H2106B-3**	
	460	558	656	754	**H2107B-3**	
	676	820	—	—	**H2108B-3**	
For Use with Size 8 Starters Only — Series B and IEC Z with 1500/5 CT						
32A ②	254	306	360	411	**H2104B-3**	
	384	465	549	630	**H2105B-3**	
	576	699	822	945	**H2106B-3**	
	690	837	984	1131	**H2107B-3**	
	1014	1230	—	—	**H2108B-3**	

② Sizes 5 – 8 and IEC P – Z use the 32A overload relay with current transformers.

Note: Heater packs are shipped 3 to a carton. Catalog Numbers are for 3 heater packs.

Discount Symbol **1CD1C**

Auxiliary Contacts

NEMA Sizes 00 – 2 — IEC Sizes A – K

The auxiliary contacts listed below are designed for installation on Freedom Series starters and contactors. Snap-on design facilitates quick, easy installation.

These bifurcated design contact blocks, featuring silver cadmium alloy contacts, are well suited for use in very low energy (logic level) circuits.



Side Mounted



Top Mounted

Table 34-349. Selection Product

Description	Contact Configuration Code ①	Catalog Number	Price U.S. $
Side Mounted			
1NO	10	**C320KGS1**	
1NO (Logic Level)	10	**C320KGS1L**	
1NC	01	**C320KGS2**	
1NO-1NC	11	**C320KGS3**	
1NO-1NC (Logic Level)	11	**C320KGS3L**	
2NO	20	**C320KGS4**	
2NO (Logic Level)	20	**C320KGS4L**	
2NC	02	**C320KGS5**	
1NO-1NCI	N/A	**C320KGS6**	
1NO (EC)-1NC (LO)	N/A	**C320KGS7**	
1NCI	N/A	**C320KGS8**	
Top Mounted			
1NO	10	**C320KGT1**	
1NC	01	**C320KGT2**	
1NO-1NC	11	**C320KGT3**	
1NO-1NC (Logic Level)	11	**C320KGT3L**	
2NO	20	**C320KGT4**	
2NC	02	**C320KGT5**	
1NO-1NCI	N/A	**C320KGT6**	
1NO (EC)-1NC (LO)	N/A	**C320KGT7**	
1NCI	N/A	**C320KGT8**	
3NO	30	**C320KGT9**	
2NO-1NC	21	**C320KGT10**	
1NO-2NC	12	**C320KGT11**	
3NC	03	**C320KGT12**	
4NO	40	**C320KGT13**	
3NO-1NC	31	**C320KGT14**	
2NO-2NC	22	**C320KGT15**	
2NO-2NC (Logic Level)	22	**C320KGT15L**	
1NO-3NC	13	**C320KGT16**	
4NC	04	**C320KGT17**	
3NO-1NCI	N/A	**C320KGT18**	
2NO-1NCI-1NC	N/A	**C320KGT19**	
2NO-1NO (EC)-1NC (LO)	N/A	**C320KGT20**	
1NO-1NC-1NO (EC)-1NC (LO)	N/A	**C320KGT21**	

Note: NCI = Normally Closed early opening designed for use in reversing applications. EC = Early Closing. LO = Late Opening.

① For reference only — not part of Catalog Number. See above right.

Contact Configuration Code

This two-digit code is found on the auxiliary contact to assist in identifying the specific contact configuration. The first digit indicates the quantity of NO contacts and the second indicates the quantity of NC contacts.

NEMA Sizes 3 – 8 — IEC Sizes L – Z

Table 34-350. Product Selection

Circuit	Contact Configuration Code ②	Catalog Number		Price U.S. $
Base Auxiliary Contacts — NEMA Sizes 3 – 5, IEC Sizes L – S				
		NEMA Size 3 IEC Sizes L – N	NEMA Sizes 4 – 5 IEC Sizes P – S	
NO	10	**C320KGS31**	**C320KGS41**	
NO-NC	11	**C320KGS32**	**C320KGS42**	
Auxiliary Contacts — NEMA Sizes 3 – 5, IEC Sizes L – S				
		Catalog Number		
NO	10	**C320KGS20**		
NC	01	**C320KGS21**		
NO-NC ③	11	**C320KGS22**		
Auxiliary Contacts — NEMA Sizes 6 – 8, IEC Sizes T – Z				
		Size	Catalog Number	
NO-NC	11	NEMA 8, IEC Z	**C320KA5**	
2NO-2NC	22	NEMA 6 – 7	**C320KA6**	
2NO-2NC	22	IEC T – X	**C320KA8**	

② For reference only — not part of Catalog Number. See above.

③ NO-NC occupies two positions — L2 and L3, or R2 and R3. See next page.



Base Auxiliary Contact Cat. No. C320KGS42



Auxiliary Contact Cat. No. C320KGS22

Discount Symbol **1CD1C**

34

Auxiliary Contact Location

NEMA Sizes 00 – 2, IEC Sizes A – K

The sketches below illustrate the maximum number of auxiliary contacts that can be assembled to a contactor or starter and their locations.

Table 34-351. Auxiliary Contacts

Catalog Number	Size	Poles	Available Mounting Positions ①②	
			Open Type	Enclosed
AE16	A – K	3	T1, L1	L1
AN16	00 0 – 2	3 3	T1, L1, R1 T1, L1	L1 L1
AE56	A – K	3	L1, R1	L1, R1
AN56	00 – 2	3	T1, T2	—
CE15	A – C D – K G – J G – J	2 – 4 3 4 5	T1, L1, R1 T1, L1 T1, R1 T1	L1, R1 L1 — —
CN15	00 0 – 2 1, 2 1, 2	2 – 4 2 – 3 4 5	T1, L1, R1 T1, L1 T1, L1 T1, L1	L1 L1 — —
CN35	10A 20 – 60A 60A 60A	2 – 4 2 – 3 4 5	T1, L1, R1 T1, L1 T1, L1 T1, L1	L1 L1 — —
CE55	A – K	3	L1, R1	L1, R1
CN55	00 – 2	3	T1, T2	—

① Available positions on contactors or starters other than what is factory installed.

② When a pneumatic timer is mounted on contactor, only side mounted auxiliary contact positions are available. The solid-state timer, when added, takes up side mounted auxiliary contact position.

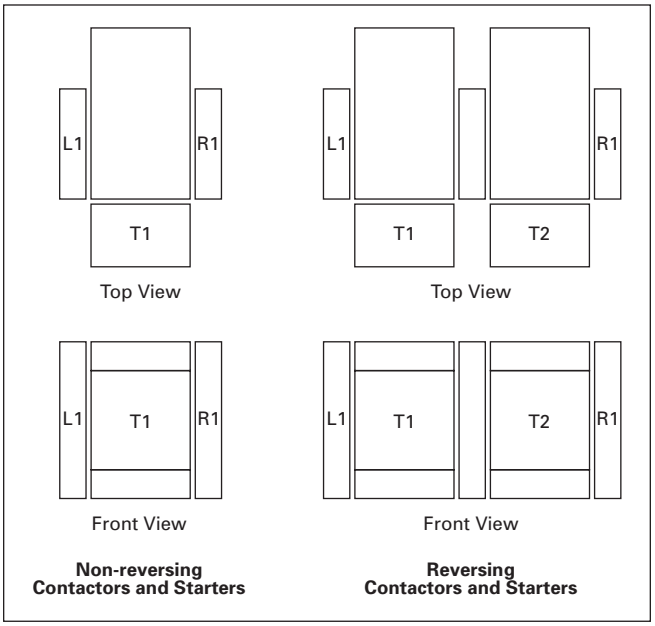

Figure 34-167. Auxiliary Contact Location

NEMA Sizes 3 – 8, IEC Sizes L – Z

The sketches below illustrate the maximum number of auxiliary contacts that can be assembled to a contactor and their locations.

Note: A Base Auxiliary Contact must be added in position R1 before additional auxiliary contacts can be mounted on NEMA Size 3 and IEC Sizes L – N, or in L1 on NEMA Sizes 4 – 5 and IEC Sizes P – S.

Table 34-352. Auxiliary Contacts

Size	Available Mounting Positions ③
NEMA Size 3, IEC Sizes L – N	R2, R3, L1, L2, L3
NEMA Sizes 4 – 5, IEC Sizes P – S	L2, L3, R1, R2, R3
NEMA Sizes 6 – 7, IEC Sizes T – X	R1
NEMA Size 8, IEC Size Z	L2, R2

③ Available positions on contactors or starters other than what is factory installed.

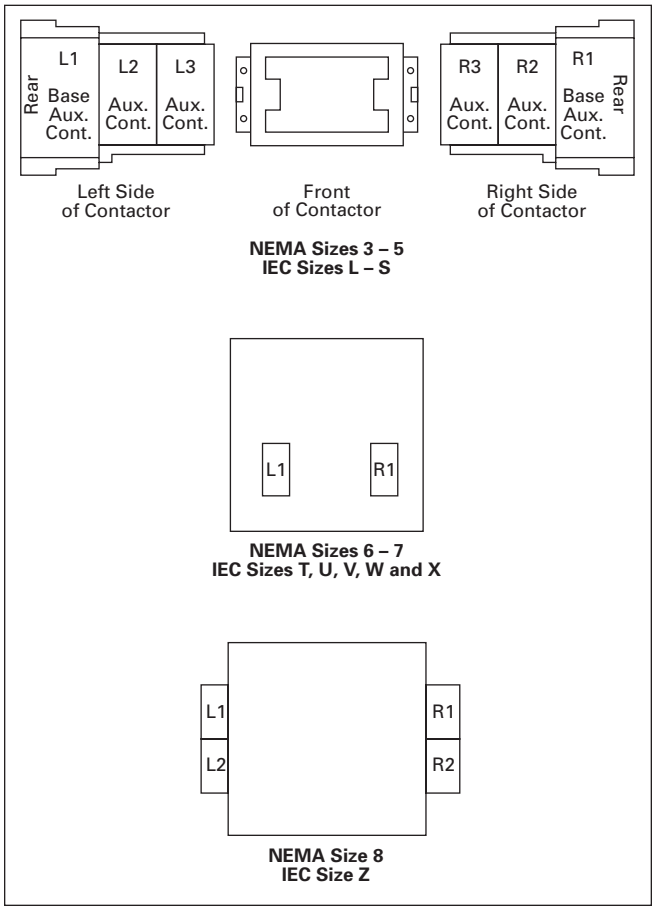

Figure 34-168. Auxiliary Contact Location

DC Magnet Coils

When Ordering Specify

Conversion Kit for Field Assembly

- Catalog Number

Factory Installed DC Coil

- For factory installed DC magnet coil on AC contactors or non-combination starters (open type only), substitute the Code Suffix from table below for the magnet coil identifier in the device Catalog Number.

  EXAMPLE: For Size 0 AC contactor with a 24V DC coil, change CN15BN3**A**C to CN15BN3**T1**C.

Application

- Connect for separate control
- Not for use with cover control switch operators
- Use twin break, heavy-duty pilot devices
- Designed for +10%, -20% rated voltage, continuous duty operation

Non-reversing Kit Consists of:

- 1 Encapsulated DC magnet coil
- 1 NCI or NO/NCI side mounted auxiliary contact

  Note: These kits are supplied with a NO/NCI side mounted auxiliary contact in place of the NCI contact.
- 2 Blue colored connection wires
- 1 Instruction publication

Operation

These DC coil kits have separate pick-up and seal windings. A **special** (side mounted) early-break NCI auxiliary contact is used to either disconnect the pick-up winding or insert the seal winding in series with the pick-up winding, depending on the frame size of the contactor. DC coil kits come in two styles, a suffix **1** and a suffix **4**. The 1 suffix contains only the **special** (side mounted) early break NCI auxiliary contact. The 4 suffix contains a NO contact in the same package as the **special** (side mounted) early-break NCI auxiliary contact.

Note: For NEMA Sizes 00 and 0 and IEC Sizes A – F, contactors may utilize either suffix 1 or 4 DC coil kits; starters may utilize suffix 4 DC coil kits only. For NEMA Sizes 1 and 2 and IEC Sizes G – K, both contactors and starters may utilize a suffix 4 DC coil kit only.

On the above sizes only, when the **special** auxiliary package is mounted on the side of a contactor or starter, **no** standard auxiliary contact may be mounted on the same side.

Note: For NEMA Sizes 3 – 5 and IEC Sizes L – S, the special coil NCI clearing contact is an add-on auxiliary (**must** mount on a base mount auxiliary contact; normally a 1NO). This arrangement will normally account for two of the three contact positions on the side of each contactor or starter.

Table 34-353. Product Selection DC Magnet Coils

Contactor or Starter Size		Conversion Data					Complete Conversion Kit			Factory Installed	
		Volts	Magnet Coil			NCI Interlock Number					
NEMA	IEC		Coil Number	Amps P.U./Seal	Watts P.U./Seal		Catalog Number	Price U.S $	Ship Wt. Lbs. (kg)	Code Suffix	Adder U.S $
Non-reversing — Kit includes NCI Side Mounted Auxiliary Contact											
00 and 0 CN35 – A, B, D D15 Relays	A – F	12 24 48 120	9-2988-11 9-2988-12 9-2988-13 9-2988-14	6.4/.28 3.2/.14 1.6/.07 .64/.028	76.8/3.36 76.8/3.36 76.8/3.36 76.8/3.36	C320KGD1 C320KGD1 C320KGD1 C320KGD1	**C335KD3R1** **C335KD3T1** **C335KD3W1** **C335KD3A1**		1.0 (.5)	**R1** **T1** **W1** **A1**	
① 00 and 0 CN35 – A, B, D D15 Relays	A – F	12 24 48 120	9-2988-11 9-2988-12 9-2988-13 9-2988-14	6.4/.28 3.2/.14 1.6/.07 .64/.028	76.8/3.36 76.8/3.36 76.8/3.36 76.8/3.36	C320KGD2 ① C320KGD2 ① C320KGD2 ① C320KGD2 ①	**C335KD3R4** **C335KD3T4** **C335KD3W4** **C335KD3A4**		1.0 (.5)	**R4** **T4** **W4** **A4**	
1 and 2 CN35 – G	G – K	12 24 48 120	9-2990-1 9-2990-2 9-2990-3 9-2990-4	15.4/.42 7.7/.21 3.9/.11 1.5/.041	185/4.98 185/4.96 185/5.04 185/4.87	C320KGD5 C320KGD5 C320KGD5 C320KGD5	**C335KD4R4** **C335KD4T4** **C335KD4W4** **C335KD4A4**		1.0 (.5)	**R4** **T4** **W4** **A4**	
3 CN35 – K	L – N	12 24 48 120	9-3002-1 9-3002-2 9-3002-3 9-3002-4	24/.40 12/.20 6.1/.097 2.5/.038	293/4.84 288/4.75 295/4.67 298/4.57	C320KGD3 C320KGD3 C320KGD3 C320KGD3	**C335KD5R1** **C335KD5T1** **C335KD5W1** **C335KD5A1**		2.0 (.9)	**R1** **T1** **W1** **A1**	
4 and 5 CN35 – N, S	P – S	24 48 120 240	9-2026-4 9-2026-3 9-2026-2 9-2026-1	18/.22 9/.11 3.3/.05 1.7/.02	400/5.3 400/5.2 450/5.4 440/4.9	C320KGD3 C320KGD3 C320KGD3 C320KGD3	**C335KA3T1** **C335KA3W1** **C335KA3A1** **C335KA3B1**		2.5 (1.1)	**T1B** **W1B** **A1B** **B1B**	
Reversing											
00 and 0 CN35 – A, B, D D15 Relays	A – F	12 24 48 120	9-2988-1 ⑤ 9-2988-2 ⑤ 9-2988-3 ⑤ 9-2988-4 ⑤	6.4/.28 3.2/.14 1.6/.07 .64/.028	76.8/3.36 76.8/3.36 76.8/3.36 76.8/3.36	C320KGD1 ⑤ C320KGD1 ⑤ C320KGD1 ⑤ C320KGD1 ⑤	**C335KD3R1** ②⑤ **C335KD3T1** ②⑤ **C335KD3W1** ②⑤ **C335KD3A1** ②⑤		1.0 (0.9)	**R1** ③ **T1** ③ **W1** ③ **A1** ③	
1 and 2 CN35 – G	G – K	12 24 48 120	9-2990-1 ⑤ 9-2990-2 ⑤ 9-2990-3 ⑤ 9-2990-4 ⑤	15.4/.42 7.7/.21 3.9/.11 1.5/.041	185/4.98 185/4.96 185/5.04 185/4.87	C320KGD3 ⑤ C320KGD3 ⑤ C320KGD3 ⑤ C320KGD3 ⑤	④			**R1** ③ **T1** ③ **W1** ③ **A1** ③	

① These kits are supplied with a NO/NCI side mounted auxiliary contact in place of the NCI contact.
② Kit does not include mechanical interlock or crossover wiring. Two NO/NCI top mounted auxiliary contacts are supplied for electrical interlocking.
③ Factory installed DC coils on NEMA contactors and starters include a NO/NC top mounted auxiliary contact on each contactor for electrical interlocking. On IEC contactors and starters, a NC top mounted auxiliary contact is supplied on each contactor for electrical interlocking.
④ Available factory assembled only.
⑤ Two required per reversing assembly.

Discount Symbol **1CD1C**

34

Remote Reset Module (32A Overload Relay)

The C316RR remote reset module for the C316F, C316S and C316U overload relays allows remote resetting of tripped (32A) overload relays by means of an electrical solenoid attachment which mounts on the side of the overload relay.

Table 34-354. Product Selection

Remote Reset Module Operating Voltage	Catalog Number	Price U.S. $
24V 50/60 Hz	**C316RR1U**	
110V 50/60 Hz	**C316RR1A**	

Metal Mounting Plates



Table 34-355. For Use on IEC Style Contactors, Starters and Overload Relays

Application	Catalog Number	Price U.S. $
Contactors		
IEC Sizes A – F	**C321MP1**	
IEC Sizes G – K	**C321MP2**	
Non-reversing Starters		
IEC Sizes A – F	**C321MP3**	
IEC Sizes G – K	**C321MP4**	
Overload Relays ①		
32A	**C321MP5**	
75A	**C321MP6**	
Reversing Starters		
IEC Sizes A – F	**C321MP7**	
IEC Sizes G – K	**C321MP12**	
IEC Sizes L – N	**C321MP11**	
Reversing Contactors		
IEC Sizes A – F	**C321MP8**	
IEC Sizes G – K	**C321MP9**	
IEC Sizes L – N	**C321MP13**	

① For use with DIN rail and base mounting adapters listed on **Page 34-273**.

Table 34-356. Metal Mounting Plates — Approximate Dimensions and Shipping Weights

Catalog Number	Dimensions in Inches (mm)			Ship Wt. Lbs. (kg)
	Wide	High	Mounting	
C321MP1	2.00 (50.8)	3.88 (98.6)	1.50 x 3.38 (38.1 x 85.9)	.2 (.1)
C321MP2	2.56 (65.0)	5.05 (128.3)	2.00 x 4.50 (50.8 x 114.3)	.4 (.2)
C321MP3	1.80 (45.7)	6.60 (167.6)	6.07 (154.2) ②	.7 (.3)
C321MP4	2.56 (65.0)	8.08 (205.2)	2.00 x 7.63 (50.8 x 193.8)	.6 (.3)
C321MP5	1.77 (45.0)	4.63 (117.6)	4.27 (108.5) ②	.3 (.1)
C321MP6	2.52 (64.0)	5.14 (130.6)	2.00 x 4.59 (50.8 x 116.6)	.4 (.2)
C321MP7	4.20 (106.7)	7.38 (187.5)	3.50 x 6.87 (88.9 x 174.5)	.8 (.4)
C321MP8	4.20 (106.7)	4.35 (110.5)	3.50 x 3.86 (88.9 x 98.0)	.5 (.2)
C321MP9	5.66 (143.8)	5.05 (128.3)	5.25 x 3.63 (133.4 x 92.2)	.8 (.4)
C321MP11	8.70 (221.0)	11.35 (288.3)	7.00 x 10.81 (177.8 x 274.6) ③	1.2 (.5)
C321MP12	5.71 (145.0)	8.08 (205.2)	5.25 x 6.75 (133.4 x 171.5) ③	.9 (.4)
C321MP13	8.70 (221.0)	7.17 (182.1)	7.00 x 6.63 (177.8 x 168.4) ③	.9 (.4)

② 2-hole mounting.
③ 3-hole mounting.

3-Pole Top Mounted Fuse Block Kit

IEC Sizes A – K, NEMA Sizes 00 – 2



Field mount to Freedom Series starters and contactors. Designed to save space and reduce installation costs. They provide short circuit protection for branch circuits.

Table 34-357. Selection Product

Fuse Type			Catalog Number	Price U.S. $
Class H	—	30A 250V	**C350KH21**	
Class R	—	30A 250V	**C350KR21**	
Class G	—	15A 300V	**C350KG37**	
Class G	—	20A 300V	**C350KG38**	
Class G	—	30A 300V	**C350KG31**	
Class G	—	60A 300V	**C350KG32**	
Class T	—	30A 300V	**C350KT31**	
Class T	—	60A 300V	**C350KT32**	
Class J	—	30A 600V	**C350KJ61**	
Class J	—	60A 600V	**C350KJ62**	
Type M	—	30A 600V ④	**C350KM61**	
Class CC	—	30A 600V	**C350KC63**	
Class T	—	30A 600V	**C350KT61**	
Class T	—	60A 600V	**C350KT62**	

④ Type M fuse block not approved for branch circuit protection.

Discount Symbol (Remote Reset). **1CD7**
Discount Symbol (Mounting Plates) **1CD1C**

Mechanical Interlock and Reversing Kits

Mechanical interlocks and reversing kits are designed for field assembly of reversing contactors or starters from Freedom Series components. The Reversing Kits include a Mechanical Interlock, stabilizer bar and a pre-cut, trimmed and formed wire set. Auxiliary contacts, if required, must be ordered separately. See **Page 34-277**.



Cat. No. C321KM60B



Part No. 23-7165



Wire Set

Table 34-358. Reversing Kits (Horizontal Contactor Mounting Only)

Application		Catalog Number	Price U.S. $
NEMA Size	**IEC Size**		
00	A – C	**C321KM60K14B**	
0	D – F	**C321KM60K13B**	
1	—	**C321KM60K15B**	
2	G – K	**C321KM60K16B**	
3	—	**C321KM60K17** ①	
—	L and M	**C321KM60K21** ①	
—	N	**C321KM60K18** ①	
4	—	**C321KM60K19** ①	
5	—	**C321KM60K20** ①	
—	P – S	**C321KM60K44** ①	

① Kit includes (2) NC auxiliary contacts.

Table 34-359. Mechanical Interlock Only ②③

Application			Catalog Number	Price U.S. $
NEMA Size	**IEC Size**	**Contactor Mounting**		
00 – 2	A – K	Horizontal	**C321KM60B**	
3	L – N	Horizontal	**C321KM30**	
3 to 4	N to P	Horizontal	**C321KM43**	
4	P – S	Horizontal	**C321KM40**	
4 to 5	—	Horizontal	**C321KM45**	
4 to 6	S to T/U	Horizontal	**C321KM80**	
5	—	Horizontal	**C321KM50**	
5 to 6	—	Horizontal	**C321KM56**	
6	T and U	Horizontal	**C321KM70**	
6 to 7	T/U to V – X	Horizontal	**C321KM90**	
7	V, W and X	Horizontal	**C321KM34**	
4 or 5 to 5	P – S to 5	Vertical	**C321KM55**	
5 to 6	—	Vertical	**C321KM65**	
6	T and U	Vertical	**C321KM66**	
6 to 7	T/U to V – X	Vertical	**C321KM67**	

② Without cross-wiring.
③ For use with latest series product.

Solid-State Timers

Solid-State ON DELAY Timer — Side Mounted on Freedom Series NEMA 00 – 2, IEC A – K and C25D, C25E and C25F Frame



This timer is designed to be **wired in SERIES with the load** (typically a coil). When the START button is pushed (power applied to timer), the ON DELAY timing function starts. At the completion of the set timing period, timer and series wired load will both be energized.

Table 34-360. Product Selection — Mounted Timer

Timing Range	Catalog Number ④⑤⑥	Price U.S. $
.1 – 1.0 Seconds	**C320TDN1_**	
1 – 30 Seconds	**C320TDN30_**	
30 – 300 Seconds	**C320TDN300_**	
5 – 30 Minutes	**C320TDN2000_**	

④ Add operating voltage Suffix to Catalog Number. **A** = 120V, **B** = 240V, **E** = 208V
⑤ Rated .5 ampere pilot duty – not to be used on larger contactors.
⑥ Terminal connections are quick connects only. Two per side.

Shorting Bar Kits

These kits provide phase-to-phase power connections of contactors for field assembly. The kits include bus connections and mounting hardware. The shorting bars connect all three phases of a single contactor.

Table 34-361. Product Selection

Description	Catalog Number	Price U.S. $
NEMA Size 3, IEC Sizes L – N	**C321SB18**	
NEMA Size 4, IEC Sizes P – S	**C321SB19**	
NEMA Size 5	**C321SB21**	
NEMA Size 6, IEC Sizes T and U	**C321SB22**	

Pneumatic Timers — Top Mounted



Attachment mounts on top of any NEMA Size 00 – 2 or IEC Size A – K Freedom Series starter or contactor (top mounted auxiliary contacts can not be installed on device when timer is used). Timer unit has 1NO-1NC isolated timed contacts — circuits in each pole must be the same polarity. Units are convertible from OFF to ON DELAY or vice-versa.

Table 34-362. Maximum Ampere Ratings

Description	Volts AC			
	120	**240**	**480**	**600**
Make	30	15	7.5	6
Break	3	1.5	.75	.6

Table 34-363. Product Selection

Timing Range	Catalog Number	Price U.S. $
.1 to 30 Seconds	**C320TP1**	
10 to 180 Seconds	**C320TP2**	

Discount Symbol **1CD1C**

Locking Cover for Overload Relay — C306 Only

Snap-on transparent or opaque plastic panel for covering access port to the overload relay trip setting dial — helps prevent accidental or unauthorized changes to trip and reset setting.

Table 34-364. Product Selection

	Description	Min. Ordering Qty. (Std. Pkg.)	Catalog Number	Price U.S. $
	Clear cover, no accessibility	50	**C320PC3**	
	Gray cover, no accessibility, with Auto only nib	50	**C320PC4**	
	Gray cover, no accessibility, with Manual only nib	50	**C320PC5**	
	Gray cover with FLA dial accessibility, A, B, C, D positions an Auto only nib	50	**C320PC6**	
	Gray cover with FLA dial accessibility, A, B, C, D positions and Manual only nib	50	**C320PC7**	

Control Circuit Fuse Block



These panel mounted fuse holders, designed for control circuit protection or other similar low current requirements, have extractor type fuse caps. The Class CC rejection type fuses (KTK-R) used in these holders are intended for use with equipment designated as being suitable for use on systems having high available fault currents. If branch circuit protective device is 45A or greater, C320FBR fuse kit may be required for control circuit protection per NEC 430-72.

Table 34-365. Product Selection

Type	Max. Amperes	Catalog Number	Price U.S. $
Fuse Holder Only	15 30	**C320FB** ① **C320FBR** ②	

① A fuse is not supplied, but holder will accept a Bussman Type KTK or KTK-R (13/32" x 1-1/2") fuse, 600V maximum.

② Includes a 5A, 600V KTK-R fuse.

DIN Rail Mounting Channel — 35 mm

Designed for DIN rail mounting of IEC style contactors and starters.



DIN Rail

Table 34-366. Product Selection

Description	Catalog Number	Price U.S. $
1 Meter Length	**MC382MA1**	

Finger Protection Shields

Snap-on shields for both contactors and starters provide IEC Type IP20 Finger Protection. Prevents accidental contact with line/load terminals.

Table 34-367. Product Selection

Application	Catalog Number	Price U.S. $
NEMA Size 00, IEC Sizes A – C NEMA Size 0, IEC Sizes D – F	**C320LS1** **C320LS2**	
NEMA Sizes 1 – 2, IEC Sizes G – K Contactors Reversing Contactors	 **C320LS3** **C320LS4**	
NEMA Size 1 Starters Reversing Starters	 **C320LS5** **C320LS6**	
NEMA Size 2, IEC Sizes G – K Starters Reversing Starters	 **C320LS7** **C320LS8**	

Adapter to DIN Rail Mount

NEMA 1 – 2 and IEC G – K Contactors

Designed to allow DIN rail mounting of NEMA 1 – 2 and IEC G – K contactors. Includes all hardware required to convert contactors from panel mounting to 35 mm DIN rail mounting.

Table 34-368. Product Selection

Catalog Number	Price U.S. $
C320DN65	

Transient Suppressor Kits

NEMA Sizes 00 – 2, IEC Sizes A – K



Cat. No. C320TS2

These kits limit high voltage transients produced in the control circuit when power is removed from the contactor or starter coil. There are three separate suppressors for use on 24 – 120V, 208 – 240V or 277 – 480V coils respectively.

These devices mount directly to the coil terminals of Freedom Series contactors or starters NEMA Sizes 00 – 2, IEC Sizes A – K and lighting contactors 10 – 60A. Reversing devices will require two.

Table 34-369. Product Selection

Description	Coil Voltage 50/60 Hz ③	Catalog Number	Price U.S. $
Transient Suppressor	24 – 120V 208 – 240V 277 – 480V	**C320TS1** **C320TS2** **C320TS3**	

③ Suppressor is compatible with coil voltages/ranges as shown, 50 and 60 Hz.

NEMA Sizes 3 – 5, IEC Sizes L – S



This device mounts on top of any side mounted auxiliary contact on Freedom Series NEMA Sizes 3 – 5, IEC Sizes L – S and lighting contactors 100 – 300A. It connects across coil terminals on any 120V contactor or starter magnet coil (reversing starters or contactors require 2).

Limits high voltage transients produced in the circuit when power is removed from the coil.

Table 34-370. Product Selection

Description	Coil Voltage	Catalog Number	Price U.S. $
Transient Suppressor	120V	**C320AS1**	

Discount Symbol **1CD1C**

DC/AC Interface Module



Cat. No. C320DC

The Catalog Number C320DC Interface Module is an optically isolated solid-state switch which provides a means of operating AC coils with a 5 – 48V DC control signal. It acts as a space saving interposing relay which can switch a specified 50/60 Hz AC source to the contactor or starter coil.

The module may be directly attached to the coil terminals of any Freedom Series contactor or starter — NEMA Sizes 00 – 3, IEC Sizes A – N and lighting contactors 10 – 100A. It also has provisions for DIN rail mounting.

The module will operate coils within the voltage ranges shown below.

Design Characteristics

- DC Input: 5 – 48V DC ±10% at mA nominal
- AC Operating Voltage: 240V AC max. (360 VA) ±10% 50/60 Hz
- DC Operating Voltage: 30V DC max. (5A)
- AC Current Rating:
  - 10A make (inrush)
  - 1A break (sealed)

Table 34-371. Controller Coil Voltage Ranges

Controller Catalog Number Prefix	Controller Size or Rating	Coil Range Volts AC
AE16, AE17, AE56, AE57, CE15, CE55	A – F G – K L – N	24 – 240 48 – 240 110 – 240
AN16, AN56, CN15, CN55	00 – 0 1 – 2 3	24 _ 240 48 – 240 110 – 240
CN35	10 – 30A 60A 100A	24 – 240 48 – 240 110 – 240

Table 34-372. Product Selection

Coil Voltage	Catalog Number	Price U.S. $
6V DC 9V DC	**C320DC2V6** **C320DC2V9**	
12V DC 24V DC 48V DC	**C320DC2V12** **C320DC2V24** **C320DC2V48**	

Adhesive Dust Cover

NEMA Sizes 00 – 2, IEC Sizes A – K

These adhesive stickers come 25 to a package and provide extra protection from contaminants when applied to the sides of Freedom NEMA Sizes 00 – 2 and IEC Sizes A – K. Adhesive covers are easily applied to side opening where auxiliaries are not installed and provide extra protection from metal filings and other debris.

Table 34-373. Product Selection

Description	Catalog Number	Price U.S. $
25 to a package	**C320DSTCVR**	

Add-On Power Pole Kit

NEMA Sizes 00 – 2, IEC A – K

This device mounts on the side of Freedom NEMA Size 00 – 2 and IEC Size A – K contactors. One unit can be mounted on each side and carries UL, cUL and IEC ratings. The device is rated for resistive, inductive and lighting applications.

Table 34-374. Product Selection — Add-On Power Pole Kit

UL Ampere Rating						IEC 947 Ampere Rating			1NO Power Pole Catalog Number	Price U.S. $
Inductive 600V	Resistive 600V	hp 1-Phase		Locked Rotor 240V	Lighting Ballast Tungsten 480V	AC-1 600V	AC-3 600V	AC-5a AC-5b 480V		
		115V	230V							
15	20	1/2	2	96	20	20	12	18	**C320PPD10**	

Discount Symbol **1CD1C**

Table 34-375. For Catalog Numbers AE16, AE17, AE56, AE57, CE15 and CE55 — IEC Frames A – F

Description		IEC Frames A – F	Price U.S. $	IEC Frames A – C ①		Price U.S. $	IEC Frames D – F ①		Price U.S. $
		Series A1		Series B1	Series C1		Series B1	Series C1	
		Part No.		Part No.	Part No.		Part No.	Part No.	
Renewal Parts Publication Number		None		None	None		None	None	
Contact Kits									
2-Pole		②		②	②		②	②	
3-Pole		②		②	②		②	②	
4-Pole		②		②	②		②	②	
5-Pole		②		②	②		②	②	
Magnet Coils	**Coil Suffix**								
120V 60 Hz or 110V 50 Hz	**A**	**9-2650-1**		**9-2875-1**	**9-2875-1**		**9-2876-1**	**9-2876-1**	
240V 60 Hz or 220V 50 Hz	**B**	**9-2650-2**		**9-2875-2**	**9-2875-2**		**9-2876-2**	**9-2876-2**	
480V 60 Hz or 440V 50 Hz	**C**	**9-2650-3**		**9-2875-3**	**9-2875-3**		**9-2876-3**	**9-2876-3**	
600V 60 Hz or 550V 50 Hz	**D**	**9-2650-4**		**9-2875-4**	**9-2875-4**		**9-2876-4**	**9-2876-4**	
208V 60 Hz	**E**	**9-2650-5**		**9-2875-5**	**9-2875-5**		**9-2876-5**	**9-2876-1**	
277V 60 Hz	**H**	**9-2650-13**		**9-2875-12**	**9-2875-12**		**9-2876-12**	**9-2876-2**	
208/240V 60 Hz	**J**	**—**		**9-2875-37**	**9-2875-37**		**9-2876-37**	**9-2876-37**	
240V 50 Hz	**K**	**9-2650-12**		**9-2875-11**	**9-2875-11**		**9-2876-11**	**9-2876-3**	
380 – 415V 50 Hz	**L**	**9-2650-6**		**9-2875-6**	**9-2875-6**		**9-2876-6**	**9-2876-4**	
24V 60 Hz – 24V 50 Hz	**T**	**—**		**9-2875-36**	**9-2875-36**		**9-2876-36**	**9-2876-36**	
24V 60 Hz	**T**	**9-2650-7**		**—**	**—**		**—**	**—**	
24V 50 Hz	**U**	**9-2650-14**		**9-2875-13**	**9-2875-13**		**9-2876-13**	**9-2876-13**	
32V 50 Hz	**V**	**9-2650-9**		**9-2875-16**	**9-2875-16**		**9-2876-16**	**9-2876-16**	
48V 60 Hz	**W**	**9-2650-8**		**9-2875-8**	**9-2875-8**		**9-2876-8**	**9-2876-8**	
48V 50 Hz	**Y**	**9-2650-10**		**9-2875-9**	**9-2875-9**		**9-2876-9**	**9-2876-9**	
Overload Relays									
For replacement on existing starters: 3-Pole — Ambient Compensated Bimetallic		**C306DN3B**		**C306DN3B**	**C306DN3B**		**C306DN3B**	**C306DN3B**	
Current Transformer									
Transformer		**—**		**—**	**—**		**—**	**—**	
Magnet Frame Armature									
Lower Magnet Frame		②		②	②		②	②	
Upper Magnet Frame		②		②	②		②	②	

① Non-encapsulated coils.
② Replace with complete contactor.

Discount Symbol **1CD1C**

Note: For a complete listing of parts, refer to the Renewal Parts Publication Number referenced below.

Table 34-376. For Catalog Numbers AE16, AE17, AE56, AE57, CE15 and CE55 — IEC Frames G and H

Description		IEC Frame G		Price U.S. $	IEC Frame H		Price U.S. $
		Series A1	Series B1		Series A1	Series B1	
		Part No.	Part No.		Part No.	Part No.	
Renewal Parts Publication Number		**20862**	**22178**		**20862**	**22178**	
Contact Kits							
2-Pole		**6-65-3**	**6-65-3**		**6-65-5**	**6-65-5**	
3-Pole		**6-65-4**	**6-65-4**		**6-65-6**	**6-65-6**	
4-Pole		**6-65-11**	**6-65-11**		**6-65-13**	**6-65-13**	
5-Pole		**6-65-12**	**6-65-12**		**6-65-14**	**6-65-14**	
Magnet Coils	**Coil Suffix**						
120V 60 Hz or 110V 50 Hz	**A**	**9-2703-1**	**9-2703-1**		**9-2703-1**	**9-2703-1**	
240V 60 Hz or 220V 50 Hz	**B**	**9-2703-2**	**9-2703-2**		**9-2703-2**	**9-2703-2**	
480V 60 Hz or 440V 50 Hz	**C**	**9-2703-3**	**9-2703-3**		**9-2703-3**	**9-2703-3**	
600V 60 Hz or 550V 50 Hz	**D**	**9-2703-4**	**9-2703-4**		**9-2703-4**	**9-2703-4**	
208V 60 Hz	**E**	**9-2703-9**	**9-2703-9**		**9-2703-9**	**9-2703-9**	
277V 60 Hz	**H**	**9-2703-7**	**9-2703-7**		**9-2703-7**	**9-2703-7**	
240V 50 Hz	**K**	**9-2703-14**	**9-2703-14**		**9-2703-14**	**9-2703-14**	
380 – 415V 50 Hz	**L**	**9-2703-8**	**9-2703-8**		**9-2703-8**	**9-2703-8**	
24V 60 Hz – 24V 50 Hz	**T**	**—**	**—**		**—**	**—**	
24V 60 Hz	**T**	**9-2703-6**	**9-2703-6**		**9-2703-6**	**9-2703-6**	
24V 50 Hz	**U**	**9-2703-12**	**9-2703-12**		**9-2703-12**	**9-2703-12**	
32V 50 Hz	**V**	**9-2703-10**	**9-2703-10**		**9-2703-10**	**9-2703-10**	
48V 60 Hz	**W**	**9-2703-11**	**9-2703-11**		**9-2703-11**	**9-2703-11**	
48V 50 Hz	**Y**	**9-2703-13**	**9-2703-13**		**9-2703-13**	**9-2703-13**	
Overload Relays							
For replacement on existing starters: 3-Pole — Ambient Compensated Bimetallic		**C306GN3B**	**C306GN3B**		**C306GN3B**	**C306GN3B**	
Current Transformer							
Transformer		**—**	**—**		**—**	**—**	
Magnet Frame Armature							
Lower Magnet Frame		**17-18200**	**17-18200**		**17-18200**	**17-18200**	
Upper Magnet Frame		**48-1936**	**48-1936**		**48-1936**	**48-1936**	

Discount Symbol **1CD1C**

Note: For a complete listing of parts, refer to the Renewal Parts Publication Number referenced below.

Table 34-377. For Catalog Numbers AE16, AE17, AE56, AE57, AE800, CE15 and CE55 — IEC Frames J and K

Description		IEC Frame J		Price U.S. $	IEC Frame K		Price U.S. $
		Series A1	Series B1		Series A1	Series B1	
		Part No.	Part No.		Part No.	Part No.	
Renewal Parts Publication Number		**20862**	**22178**		**20862**	**22178**	
Contact Kits							
2-Pole		**6-65-7**	**6-65-7**		**6-65-18**	**6-65-18**	
3-Pole		**6-65-8**	**6-65-8**		**6-65-19**	**6-65-19**	
4-Pole		**6-65-15**	**6-65-15**		**—**	**—**	
5-Pole		**6-65-16**	**6-65-16**		**—**	**—**	
Magnet Coils	**Coil Suffix**						
120V 60 Hz or 110V 50 Hz	**A**	**9-2703-1**	**9-2703-1**		**9-2703-1**	**9-2703-1**	
240V 60 Hz or 220V 50 Hz	**B**	**9-2703-2**	**9-2703-2**		**9-2703-2**	**9-2703-2**	
480V 60 Hz or 440V 50 Hz	**C**	**9-2703-3**	**9-2703-3**		**9-2703-3**	**9-2703-3**	
600V 60 Hz or 550V 50 Hz	**D**	**9-2703-4**	**9-2703-4**		**9-2703-4**	**9-2703-4**	
208V 60 Hz	**E**	**9-2703-9**	**9-2703-9**		**9-2703-9**	**9-2703-9**	
277V 60 Hz	**H**	**9-2703-7**	**9-2703-7**		**9-2703-7**	**9-2703-7**	
240V 50 Hz	**K**	**9-2703-14**	**9-2703-14**		**9-2703-14**	**9-2703-14**	
380 – 415V 50 Hz	**L**	**9-2703-8**	**9-2703-8**		**9-2703-8**	**9-2703-8**	
24V 60 Hz – 24V 50 Hz	**T**	**—**	**—**		**—**	**—**	
24V 60 Hz	**T**	**9-2703-6**	**9-2703-6**		**9-2703-6**	**9-2703-6**	
24V 50 Hz	**U**	**9-2703-12**	**9-2703-12**		**9-2703-12**	**9-2703-12**	
32V 50 Hz	**V**	**9-2703-10**	**9-2703-10**		**9-2703-10**	**9-2703-10**	
48V 60 Hz	**W**	**9-2703-11**	**9-2703-11**		**9-2703-11**	**9-2703-11**	
48V 50 Hz	**Y**	**9-2703-13**	**9-2703-13**		**9-2703-13**	**9-2703-13**	
Overload Relays							
For replacement on existing starters: 3-Pole — Ambient Compensated Bimetallic		**C306GN3B**	**C306GN3B**		**C306GN3B**	**C306GN3B**	
Current Transformer							
Transformer		**—**	**—**		**—**	**—**	
Magnet Frame Armature							
Lower Magnet Frame		**17-18200**	**17-18200**		**17-18200**	**17-18200**	
Upper Magnet Frame		**48-1936**	**48-1936**		**48-1936**	**48-1936**	

Discount Symbol **1CD1C**

Note: For a complete listing of parts, refer to the Renewal Parts Publication Number referenced below.

Table 34-378. For Catalog Numbers AE16, AE17, AE56, AE57, AE800, CE15 and CE55 — IEC Frames L – N

Description		IEC Frame L Part No.	Price U.S. $	IEC Frame M Part No.	Price U.S. $	IEC Frame N Part No.	Price U.S. $
Renewal Parts Publication Number		**20427**		**20427**		**20427**	
Contact Kits							
2-Pole		**6-43-3**		**6-43**		**6-43-5**	
3-Pole		**6-43-4**		**6-43-2**		**6-43-6**	
4-Pole		**—**		**—**		**—**	
5-Pole		**—**		**—**		**—**	
Magnet Coils	**Coil Suffix**						
120V 60 Hz or 110V 50 Hz	**A**	**9-2756-1**		**9-2756-1**		**9-2756-1**	
240V 60 Hz or 220V 50 Hz	**B**	**9-2756-2**		**9-2756-2**		**9-2756-2**	
480V 60 Hz or 440V 50 Hz	**C**	**9-2756-3**		**9-2756-3**		**9-2756-3**	
600V 60 Hz or 550V 50 Hz	**D**	**9-2756-4**		**9-2756-4**		**9-2756-4**	
208V 60 Hz	**E**	**9-2756-5**		**9-2756-5**		**9-2756-5**	
277V 60 Hz	**H**	**9-2756-9**		**9-2756-9**		**9-2756-9**	
240V 50 Hz	**K**	**9-2756-13**		**9-2756-13**		**9-2756-13**	
380 – 450V 50 Hz	**L**	**—**		**—**		**—**	
340V 60 Hz	**L**	**9-2756-12**		**9-2756-12**		**9-2756-12**	
415V 60 Hz	**M**	**9-2756-8**		**9-2756-8**		**9-2756-8**	
550V 50 Hz	**N**	**9-2756-14**		**9-2756-14**		**9-2756-14**	
24V 60 Hz – 24V 50 Hz	**T**	**—**		**—**		**—**	
24V 60 Hz	**T**	**9-2756-6**		**9-2756-6**		**9-2756-6**	
24V 50 Hz	**U**	**9-2756-11**		**9-2756-11**		**9-2756-11**	
32V 50 Hz	**V**	**9-2756-10**		**9-2756-10**		**9-2756-10**	
48V 60 Hz	**W**	**9-2756-15**		**9-2756-15**		**9-2756-15**	
48V 50 Hz	**Y**	**9-2756-7**		**9-2756-7**		**9-2756-7**	
Overload Relays							
For replacement on existing starters: 3-Pole — Ambient Compensated Bimetallic		**10-6530**		**10-6530-2**		**10-6530-3**	
Current Transformer							
Transformer		**—**		**—**		**—**	
Magnet Frame Armature							
Lower Magnet Frame		**17-8955-2**		**17-8955-2**		**17-8955-2**	
Upper Magnet Frame		**48-1902**		**48-1902**		**48-1902**	

Discount Symbol **1CD1C**

Note: For a complete listing of parts, refer to the Renewal Parts Publication Number referenced below.

Table 34-379. For Catalog Number CE15 Contactors — IEC Frames P – S

Description		IEC Frame P Part No.	Price U.S. $	IEC Frame R Part No.	Price U.S. $	IEC Frame S Part No.	Price U.S. $
Renewal Parts Publication Number		22278		22278		22278	
Contact Kits	**Size**	6-294		6-288		6-286	
Magnet Coils	**Coil Suffix**						
120V 60 Hz or 110V 50 Hz	A	9-1891-1		9-1891-1		9-1891-1	
200V 50 Hz or 118V 60 Hz	E	—		—		—	
240V 60 Hz or 220V 50 Hz	B	9-1891-2		9-1891-2		9-1891-2	
254V 50 Hz or 277V 60 Hz	H	—		—		—	
380V 50 Hz or 415V 60 Hz	L	—		—		—	
480V 60 Hz or 440V 50 Hz	C	9-1891-3		9-1891-3		9-1891-3	
600V 60 Hz or 550V 50 Hz	D	9-1891-4		9-1891-4		9-1891-4	
208V 60 Hz	E	9-1891-13		9-1891-13		9-1891-13	
277V 60 Hz	H	9-1891-26		9-1891-26		9-1891-26	
240V 50 Hz	K	9-1891-20		9-1891-20		9-1891-20	
380V 50 Hz	L	9-1891-14		9-1891-14		9-1891-14	
415V 50 Hz	M	9-1891-21		9-1891-21		9-1891-21	
24V 60 Hz	T	9-1891-15		9-1891-15		9-1891-15	
Overload Relays — Reference C316 Overload Relays							
Magnet Frame Armature							
Lower Magnet Frame		48-1030		48-1030		48-1030	
Upper Magnet Frame		48-1029-2		48-1029-2		48-1029-2	

Table 34-380. For Catalog Number CE15 Contactors — IEC Frames T – V

Description		IEC Frame T Part No.	Price U.S. $	IEC Frame U Part No.	Price U.S. $	IEC Frame V Part No.	Price U.S. $
Renewal Parts Publication Number		22275		22276		22586	
Contact Kits	**Size**	6-621		6-622		6-601	
Magnet Coils	**Coil Suffix**						
120V 60 Hz or 110V 50 Hz	A	9-3006		9-3006		9-2698	
200V 50 Hz or 118V 60 Hz	E	9-3006-5		9-3006-5		—	
240V 60 Hz or 220V 50 Hz	B	9-3006-2		9-3006-2		9-2698-2	
254V 50 Hz or 277V 60 Hz	H	9-3006-6		9-3006-6		9-2698-2	
380V 50 Hz or 415V 60 Hz	L	9-3006-7		9-3006-7		9-2698-6	
480V 60 Hz or 440V 50 Hz	C	9-3006-3		9-3006-3		9-2698-3	
600V 60 Hz or 550V 50 Hz	D	9-3006-4		9-3006-4		9-2698-4	
208V 60 Hz	E	—		—		9-2698-5	
277V 60 Hz	H	—		—		—	
240V 50 Hz	K	—		—		—	
380V 50 Hz	L	—		—		—	
415V 50 Hz	M	—		—		—	
24V 60 Hz	T	—		—		—	
Overload Relays — Reference C316 Overload Relays							
Magnet Frame Armature							
Lower Magnet Frame		—		—		—	
Upper Magnet Frame		—		—		—	

Feeder Group Renewal ①

Volts	Hertz	IEC Size T Series A1 Series B1	Price U.S. $	IEC Size U Series A1 Series B1	Price U.S. $	IEC Size V Series A1 Series B1	Price U.S. $
110 – 120	50/60	9-3007		9-3007		9-2705	
220 – 240	50/60	9-3007-2		9-3007-2		9-2705-2	
440 – 480	50/60	9-3007-3		9-3007-3		9-2705-3	
550 – 600	50/60	9-3007-4		9-3007-4		9-2705-4	
208	50/60	9-3007-5		9-3007-5		9-2705-5	
380 – 415	50/60	9-3007-7		9-3007-7		9-2705-6	
48 – 52	50/60	9-3007-6		9-3007-6		9-2705-8	

① Voltage ratings of the main coils must match those of the feeder group for proper operation of the starter/contactor.

Discount Symbol **1CD1C**

Note: For a complete listing of parts, refer to the Renewal Parts Publication Number referenced below.

Table 34-381. For Catalog Number CE15 Contactors — IEC Frames W – Z

Description		IEC Frame W Part No.	Price U.S. $	IEC Frame X Part No.	Price U.S. $	IEC Frame Z Part No.	Price U.S. $
Renewal Parts Publication Number		**22586**		**—**		**22586**	
Contact Kits	**Size**	**6-601**		**6-613**		**6-571**	
Magnet Coils	**Coil Suffix**						
120V 60 Hz or 110V 50 Hz	**A**	**9-2698**		**9-2698**		**9-2654**	
200V 50 Hz or 118V 60 Hz	**E**	**—**		**—**		**—**	
240V 60 Hz or 220V 50 Hz	**B**	**9-2698-2**		**9-2698-2**		**9-2654-2**	
254V 50 Hz or 277V 60 Hz	**H**	**—**		**—**		**—**	
380V 50 Hz or 415V 60 Hz	**L**	**9-2698-6**		**9-2698-6**		**9-2654-5**	
480V 60 Hz or 440V 50 Hz	**C**	**9-2698-3**		**9-2698-3**		**9-2654-3**	
600V 60 Hz or 550V 50 Hz	**D**	**9-2698-4**		**9-2698-4**		**9-2654-4**	
208V 60 Hz	**E**	**9-2698-5**		**9-2698-5**		**9-2654-6**	
277V 60 Hz	**H**	**—**		**—**		**—**	
240V 50 Hz	**K**	**—**		**—**		**—**	
380V 50 Hz	**L**	**—**		**—**		**—**	
415V 50 Hz	**M**	**—**		**—**		**—**	
24V 60 Hz	**T**	**—**		**—**		**—**	
Overload Relays — Reference C316 Overload Relays							
Magnet Frame Armature							
Lower Magnet Frame		**—**		**—**		**—**	
Upper Magnet Frame		**—**		**—**		**—**	

Feeder Group Renewal①

Volts	Hertz	IEC Size W Series A1 Series B1	Price U.S. $	IEC Size X Series A1 Series B1	Price U.S. $	IEC Size Z Series A1 Series B1	Price U.S. $
110 – 120	50/60	**9-2705**		**9-2705**		**9-2664**	
220 – 240	50/60	**9-2705-2**		**9-2705-2**		**9-2664-2**	
440 – 480	50/60	**9-2705-3**		**9-2705-3**		**9-2664-3**	
550 – 600	50/60	**9-2705-4**		**9-2705-4**		**9-2664-4**	
208	50/60	**9-2705-5**		**9-2705-5**		**9-2664-6**	
380 – 415	50/60	**9-2705-6**		**9-2705-6**		**9-2664-5**	
48 – 52	50/60	**9-2705-8**		**9-2705-8**		**—**	

① Voltage ratings of the main coils must match those of the feeder group for proper operation of the starter/contactor.

34

Discount Symbol **1CD1C**

Contents

Description *Page*

Manual Motor Protectors

Product Description **34-290**
Features **34-290**
Standards and Certifications **34-290**
Instructional Leaflets **34-290**
Product Selection **34-291**
Accessories **34-292**

Note: For more information, see CA03801001E.



Catalog Number A302GN with Side Auxiliary Contacts



Catalog Number A302KN

Product Description

The Cutler-Hammer® A302 from Eaton's electrical business is a three-phase Manual Motor Protector with an adjustable bimetallic Class 10 thermal overload and instantaneous magnetic short circuit trip mechanism. These MMPs can be used in single-phase or three-phase MMP applications. A302 MMPs are UL listed and CSA certified for group installations of motors and single motor installations up to 25 FLA. These MMPs can be field wired for single-phase motor applications by connecting the three poles in series.

Features

- Compact 45 mm design — saves panel space
- Meets UL, CSA and international standards
- CE Mark
- Class 10 bimetallic thermal overload trip
- Single-phase fault sensitivity
- Snap-on DIN rail mount capability or can be panel mounted with screws
- Open MMPs can be padlocked in OFF (STOP) position
- Terminals are "fingerproof," located in the vertical plane, easily accessible from the front with screwdriver guide holes provided for ease of wiring
- Wide range of accessories, including auxiliary contacts, undervoltage release module and shunt trip can be added to the MMP without tools

Standards and Certifications

- UL File No. E37316, Category NLRV
- CSA File No. LR12530-67M, Class 3211-05
- IEC 947-1, IEC 947-2, IEC-947-4

Instructional Leaflets

Pub20560 — A302 Manual Motor Protectors
Pub20561 — C320 Auxiliary Contacts (Side Mount)
Pub20562 — C320 Auxiliary Contacts (Internal Mount)
Pub20563 — C320 Trip Alarm Contact
Pub20564 — C320 Indicating Lights
Pub20566 — C320 Undervoltage Module
Pub20567 — C320 Shunt Trip Module
Pub20723 — C320 Busbar Accessories

Product Selection

When ordering, specify Catalog Numbers according to the following stipulations:

A302 MMPs are selected based on the overload current range required for a given motor. This current range is determined from the motor Full Load Ampere rating and Motor Service Factor usually found on the motor nameplate.

For motors with service factors less than 1.15, multiply the motor FLA by .9 to select appropriate A302 MMP. Example: For motor having FLA of 6.4A and service factor of 1.0 (6.4A x .9 = 5.76A) select Catalog Number **A302JN**.

For motor with service factor of 1.15 or greater, use motor nameplate Full Load Amperes to select the appropriate MMP. Example: For motor having FLA of 6.4A and service factor of 1.15, select Catalog Number **A302KN**.

Table 34-382. Product Selection — Type A302 Manual Motor Protector

Adjustable Thermal Current Range (Amperes)	Maximum Single-Phase Horsepower ① ②			Maximum 3-Phase Horsepower ②				Group Motor Applications 480V Maximum	Catalog Number	Price U.S. $
	115V	200V	230V	200V	230V	460V	575V	Maximum Fuse or Circuit Breaker Amperes		
.10 – .16	—	—	—	—	—	—	—	1200	**A302AN**	
.16 – .25	—	—	—	—	—	—	—	1200	**A302BN**	
.25 – .4	—	—	—	—	—	—	—	1200	**A302CN**	
.40 – .63	—	—	—	—	—	—	—	1200	**A302DN**	
.63 – 1.0	—	—	—	—	—	1/2	1/2	1200	**A302EN**	
1.0 – 1.6	—	—	1/10	—	—	3/4	1	1200	**A302FN**	
1.6 – 2.5	—	1/8	1/6	1/2	1/2	1	1-1/2	1200	**A302GN**	
2.5 – 4.0	1/8	1/4	1/3	3/4	1	2	3	1200	**A302HN**	
4.0 – 6.3	1/4	1/2	1/2	1-1/2	1-1/2	3	5	1200	**A302JN**	
6.3 – 10.0	1/2	1	1-1/2	2	3	5	7-1/2	1200	**A302KN**	
10.0 – 16.0	1	2	2	3	5	10	10	1200	**A302LN**	
16.0 – 20.0	1-1/2	3	3	5	—	—	15	1200	**A302MN**	
20.0 – 25.0	2	—	—	—	7-1/2	15	20	1200	**A302NN**	

① Single-phase horsepower ratings are based on wiring the three MMP poles in series.
② Select MMP by full load amperes. Horsepower ratings are for reference only.

Discount Symbol **1CD-1**

34

Accessories

Table 34-383. Accessories — A302

	Description	Catalog Number	Price U.S. $
	Enclosure, Nonmetallic IP41 General Purpose IP55 Dust and Water Protection Conversion Kit (Converts IP41 Enclosure to IP55)	**C799MP41** **C799MP55** **C320MSG1**	
	Conduit Adapter — To convert PG16 Metric Threads on C799MP41 and C799MP55 to 1/2" N.P.T. Threads	**C320MSA1**	
	Enclosure, Semimetallic UL Listed for NEMA 1, 4, 4X, 12 and 13 Applications	**C799MP11**	
	Flush Plate (Cavity Mount), Nonmetallic IP41 General Purpose IP55 Dust and Water Protection Conversion Kit (Converts IP41 Flush Plate to IP55)	**C799FP41** **C799FP55** **C320MSG2**	
	Emergency Pushbutton — For Enclosures and Flush Plates E Button E Button Latch — Pull to Release	**C320MSE1** **C320MSE2**	
	Padlock Attachment — For Enclosures and Flush Plates	**C320MSD**	
	Red Indicating Light 110/120V 220/240V 380/415V 420/500V 500/600V	**C320MSL1A** **C320MSL1B** **C320MSL1L** **C320MSL1C** **C320MSL1D**	
	Green Indicating Light 110/120V 220/240V 380/415V 420/500V 500/600V	**C320MSL2A** **C320MSL2B** **C320MSL2L** **C320MSL2C** **C320MSL2D**	
	Auxiliary Contacts, Side Mounted 1NO-1NC 2NO 1NO-1NC Early Closing 2NO Early Closing SPDT Logic Level (100 mA, 30V maximum)	**C320MSC3** **C320MSC4** **C320MSC6** **C320MSC7** **C320MSC3L**	



Enclosure with Emergency Pushbutton and Indicating Light



Enclosure with Padlock Attachment and Indicating Light



A302 MMP with Side Auxiliary Contact

Discount Symbol **1CD-1**

Table 34-383. Accessories — A302 (Continued)

	Description	Catalog Number	Price U.S. $
	Auxiliary Contacts, Internally Mounted within MMP Housing ① 1NO-1NC I_e (AC-15) = 2A, 230V; 1A, 400V; .5A, 500V I_e (DC-15) = .7A, 60V; .55A, 110V; .25A, 220V	**C320MSC8**	
	Trip Alarm, Internally Mounted within MMP Housing. These contacts change state only when overload trips or short circuit occurs. ① 1NO 1NC I_e (AC-15) = 2A, 230V; 1A, 400V; .5A, 500V I_e (DC-15) = .7A, 60V; .55A, 110V; .25A, 220V	 **C320MSC1** **C320MSC2**	
	Shunt Trip, Internally Mounted within MMP Housing ① 110/120V 220/240V 380/440V 415/480V 550/600V	 **C320MST1A** **C320MST1B** **C320MST1L** **C320MST1C** **C320MST1D**	
	Undervoltage Release, Internally Mounted within MMP Housing ① 110/120V 220/240V 380/440V 415/480V 550/600V	 **C320MSR1A** **C320MSR1B** **C320MSR1L** **C320MSR1C** **C320MSR1D**	
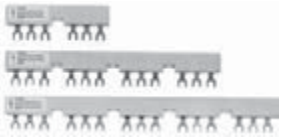	3-Phase Connecting Busbar — Permits quick line side connection of adjacent MMPs (600V, 65A Max.) For Linking 2 MMPs For Linking 4 MMPs For Linking 5 MMPs	 **C320MSB1** **C320MSB2** **C320MSB3**	
	Terminal Block — Used in conjunction with 3-Phase Connecting Busbar listed above (600V, 65A Max.) Wire Range: 10 – 6 AWG	**C320MSB4**	
	Busbar Cover — Used to cover unused Busbar Terminals (box of 10 covers)	**C320MSB10**	
	Combination Adapter Plate — Permits A302 MMP and magnetic contactor (Cat. No. CE15) to be mounted one above the other. Adapter plate snap mounts to DIN rail.	**C321MSP**	
	35 mm DIN Rail — 1 Meter Length	**MC382MA1**	

① Only one internally mounted accessory can be mounted within MMP housing.



A302 MMP with Undervoltage Release Module Mounted in Base



3-Phase Connecting Busbar with Terminal Block, Busbar Cover and A302 MMPs



Combination Adapter Plate with A302 MMP and CE15 Contactor



A302 MMP Mounted on DIN Rail

34

Discount Symbol **1CD-1**

Contents

Description *Page*

Manual Motor Protectors

Product Description **34-294**
Application Description **34-294**
Features **34-294**
Standards and Certifications **34-294**
Instructional Leaflets **34-294**
Product Selection **34-295**
Accessories **34-297**

34

Note: For more information, see CA03801001E.



A307, A308 and A309 Manual Motor Protectors

Product Description

The Cutler-Hammer® A307, A308 and A309 family of Manual Motor Protectors (MMPs) from Eaton's electrical business feature a rotary ON/OFF manual disconnect, Class 10 adjustable bimetallic overload relay and fixed magnetic short circuit trip capability in one compact unit. Three frame sizes are available: A307 (45 mm) for motors with FLA ratings up to 25A, A308 (55 mm) covers motor FLA ratings up to 50A and the A309 (70 mm) is suitable for motor FLA ratings to 100A.

Application Description

The A307, A308 and A309 MMPs can be used in the following applications:

Manual Motor Protectors

All of the MMPs are UL Listed under UL508 as Manual Motor Controllers. They provide an economical solution for applications requiring simple manual starting and stopping of motors. When used as an MMP, they are typically installed in an enclosure. IP55 enclosures are offered as accessories for the MMPs. Separate short-circuit protective devices, such as circuit breakers or fuses, are wired ahead of the MMPs. The short-circuit protective device should be sized per the NEC code and should not exceed 400% of the maximum FLA dial setting of the MMP.

Group Motor Installations

A Group Motor Installation can be defined as more than one motor circuit protected by a single set of fuses or circuit breaker on a motor branch circuit. This eliminates the need for individual fuses or circuit breakers for each motor circuit. Substantial component cost savings, panel space savings and reduced wiring installation time can be achieved in Group Motor Installations.

Table 34-384. Short Circuit Ratings

Description	Specification
UL 508 Type E Manual Combination Starter/Motor Controller	
A307 ①	65 kA @ 240V, 480Y/277V 30 kA @ 600Y/347V up to 12.5A
A308 ①	65 kA @ 240V, 480Y/277V 25 kA @ 600Y/347V
A309 ①	65 kA @ 240V, 480Y/277V 30 kA @ 600Y/347V up to 75A

① See **Pages 34-295 – 34-296** for individual ratings.

Features

- ON/OFF Rotary Handle with Lockout Provision
- Visible Trip Indication
- Class 10 Overload Protection
- Phase Loss Sensitivity
- Ambient Temperature Compensation to 140°F
- Fixed Short Circuit Trip — 13 times maximum setting of overload FLA dial
- Type 2 Coordination per IEC 947
- Identification Markers Standard on Starter Faceplate
- Motor Applications from 0.11A to 100A
- Built-in heater and magnetic trip elements to protect the motor
- Adjustment dial for setting motor FLA
- DIN Rail or Panel Mount
- Accessories include:
  - ❑ Front and Side Auxiliary Contacts
  - ❑ Trip Indicating Contacts
  - ❑ Tamperproof Cover for OLR Dial
  - ❑ Undervoltage Release
  - ❑ Shunt Trip
  - ❑ Thru-the-Door Operators
  - ❑ Enclosures
  - ❑ 3-Phase Line Side Connecting Links

Standards and Certifications

- UL File No. E176513, Category NKJH (A307, A308, A309)
  UL File No. E37317, Category NKCR (Accessories)
- CSA File LR12530, Class 3211-05
- IEC 947-1; IEC 947-2; IEC947-4-1
- DIN VDE 0660 Part 100, Part 101 and Part 102

Instructional Leaflets

IL49490 — A307 Manual Motor Protectors
IL49491 — A308 Manual Motor Protectors
IL49492 — A309 Manual Motor Protectors
IL49493 — C320TR11 Trip Indicating Contacts
IL49494 — IP55 Enclosures and Front Plates
IL49495 — C320HN Thru-the-Door Operators
IL49496 — Indicating Lights

See Application Note — AP03402001E.

Product Selection

Product Selection for Group Motor Installations

When ordering, specify Catalog Numbers according to the following stipulations:

A307, A308 and A309 Manual Motor Protectors are selected based on the overload current range required for a given motor. This current range is determined from the motor Full Load Ampere rating and Motor Service Factor usually found on the motor nameplate.

For motors with service factors less than 1.15, multiply the motor FLA by .92 to select appropriate MMP.

Example: For motor having FLA of 6.4A and service factor of 1.0 (6.4A x .92 = 5.88A) select Catalog Number A307TN.

See Application Note — AP03402001E.

Table 34-385. Group Motor Installations

FLA Adjustment Range	Single-Phase hp Ratings ①		Three-Phase hp Ratings ①				Maximum Short Circuit Current Rating		Catalog Number	Price U.S. $
	115V	230V	200V	230V	460V	575V	460V	600V		
A307										
0.11 – 0.16	—	—	—	—	—	—	65 kA	30 kA	**A307AN**	
0.14 – 0.2	—	—	—	—	—	—	65 kA	30 kA	**A307BN**	
0.18 – 0.25	—	—	—	—	—	—	65 kA	30 kA	**A307CN**	
0.22 – 0.32	—	—	—	—	—	—	65 kA	30 kA	**A307DN**	
0.28 – 0.4	—	—	—	—	—	—	65 kA	30 kA	**A307EN**	
0.35 – 0.5	—	—	—	—	—	—	65 kA	30 kA	**A307FN**	
0.45 – 0.63	—	—	—	—	—	—	65 kA	30 kA	**A307GN**	
0.55 – 0.8	—	—	—	—	—	1/2	65 kA	30 kA	**A307HN**	
0.7 – 1	—	—	—	—	1/2	1/2	65 kA	30 kA	**A307JN**	
0.9 – 1.25	—	—	—	—	3/4	3/4	65 kA	30 kA	**A307KN**	
1.1 – 1.6	—	—	—	—	3/4	1	65 kA	30 kA	**A307LN**	
1.4 – 2	—	—	—	—	1	1-1/2	65 kA	30 kA	**A307MN**	
1.8 – 2.5	—	1/6	1/2	1/2	1-1/2	1-1/2	65 kA	30 kA	**A307NN**	
2.2 – 3.2	—	1/4	3/4	3/4	1-1/2	2	65 kA	30 kA	**A307PN**	
2.8 – 4	—	1/3	3/4	1	2	3	65 kA	30 kA	**A307RN**	
3.5 – 5	1/6	1/2	1	1	3	3	65 kA	30 kA	**A307SN**	
4.5 – 6.3	1/4	3/4	1-1/2	1-1/2	5	5	65 kA	30 kA	**A307TN**	
5.5 – 8	1/3	1	2	2	5	5	65 kA	30 kA	**A307UN**	
7 – 10	1/2	1-1/2	3	3	7-1/2	10	65 kA	30 kA	**A307VN**	
9 – 12.5	1/2	2	3	3	7-1/2	10	65 kA	30 kA	**A307WN**	
11 – 16	1	3	5	5	10	15	65 kA	10 kA	**A307XN**	
14 – 20	1-1/2	3	5	7-1/2	15	20	65 kA	10 kA	**A307YN**	
17 – 22	2	3	7-1/2	7-1/2	15	20	65 kA	10 kA	**A307ZN**	
20 – 25	2	5	7-1/2	7-1/2	15	20	65 kA	10 kA	**A307Z25N**	
A308										
11 – 16	1	3	5	5	10	15	65 kA	25 kA	**A308LN**	
14 – 20	1-1/2	3	5	7-1/2	15	20	65 kA	25 kA	**A308MN**	
18 – 25	2	5	7-1/2	10	20	25	65 kA	25 kA	**A308NN**	
22 – 32	3	5	10	10	25	30	65 kA	25 kA	**A308PN**	
28 – 40	3	7-1/2	15	15	30	40	65 kA	25 kA	**A308RN**	
36 – 45	5	7-1/2	15	15	30	40	65 kA	25 kA	**A308SN**	
40 – 50	5	10	15	20	40	50	65 kA	25 kA	**A308TN**	
A309										
28 – 40	3	7-1/2	15	15	30	40	65 kA	30 kA	**A309RN**	
36 – 50	5	10	15	20	40	50	65 kA	30 kA	**A309SN**	
45 – 63	5	15	20	25	50	60	65 kA	30 kA	**A309TN**	
57 – 75	7-1/2	15	25	25	60	75	65 kA	30 kA	**A309UN**	
70 – 90	10	20	30	30	75	100	65 kA	10 kA	**A309VN**	
80 – 100	10	25	40	40	75	100	65 kA	10 kA	**A309WN**	

① Select Manual Motor Protectors for use with group motor installations by full load amperes. Horsepower ratings are for reference only.



A307



A308



A309

For motor with service factor of 1.15 or greater, use motor nameplate Full Load Amperes to select the appropriate MMP.

Example: For motor having FLA of 6.4A and service factor of 1.15, select Catalog Number A307UN.

Discount Symbol **1CD-1**

Product Selection for UL 508 Type E Self-Protected Manual Combination Starter Applications

When ordering, specify Catalog Numbers according to the following stipulations:

A307, A308 and A309 Manual Motor Protectors are selected based on the overload current range required for a given motor. This current range is determined from the motor Full Load Ampere rating and Motor Service Factor usually found on the motor nameplate.

For motors with service factors less than 1.15, multiply the motor FLA by .92 to select appropriate MMP.

Example: For motor having FLA of 6.4A and service factor of 1.0 (6.4A x .92 = 5.88A) select Catalog Number A307TN.

See Application Note — AP03402001E.



A307



A308



A309

Table 34-386. UL 508 Type E Self-Protected Manual Combination Starters

FLA Adjustment Range	Single-Phase hp Ratings ③		Three-Phase hp Ratings ③				Maximum Short Circuit Current Rating		Catalog Number	Price U.S. $
	115V	230V	200V	230V	460V	575V	240V 480Y/ 277V	600Y/ 347V		
A307										
0.11 – 0.16	—	—	—	—	—	—	65 kA	30 kA	**A307AN** ①	
0.14 – 0.2	—	—	—	—	—	—	65 kA	30 kA	**A307BN** ①	
0.18 – 0.25	—	—	—	—	—	—	65 kA	30 kA	**A307CN** ①	
0.22 – 0.32	—	—	—	—	—	—	65 kA	30 kA	**A307DN** ①	
0.28 – 0.4	—	—	—	—	—	—	65 kA	30 kA	**A307EN** ①	
0.35 – 0.5	—	—	—	—	—	—	65 kA	30 kA	**A307FN** ①	
0.45 – 0.63	—	—	—	—	—	—	65 kA	30 kA	**A307GN** ①	
0.55 – 0.8	—	—	—	—	—	1/2	65 kA	30 kA	**A307HN** ①	
0.7 – 1	—	—	—	—	1/2	1/2	65 kA	30 kA	**A307JN** ①	
0.9 – 1.25	—	—	—	—	3/4	3/4	65 kA	30 kA	**A307KN** ①	
1.1 – 1.6	—	—	—	—	3/4	1	65 kA	30 kA	**A307LN** ①	
1.4 – 2	—	—	—	—	1	1-1/2	65 kA	30 kA	**A307MN** ①	
1.8 – 2.5	—	1/6	1/2	1/2	1-1/2	1-1/2	65 kA	30 kA	**A307NN** ①	
2.2 – 3.2	—	1/4	3/4	3/4	1-1/2	2	65 kA	30 kA	**A307PN** ①	
2.8 – 4	—	1/2	3/4	1	2	3	65 kA	30 kA	**A307RN** ①	
3.5 – 5	1/6	1/2	1	1	3	3	65 kA	30 kA	**A307SN** ①	
4.5 – 6.3	1/4	3/4	1-1/2	1-1/2	5	5	65 kA	30 kA	**A307TN** ①	
5.5 – 8	1/3	1	2	2	5	5	65 kA	30 kA	**A307UN** ①	
7 – 10	1/2	1-1/2	3	3	7-1/2	10	65 kA	30 kA	**A307VN** ①	
9 – 12.5	1/2	2	3	3	7-1/2	10	65 kA	30 kA	**A307WN** ①	
11 – 16	1	3	5	5	10	15	65 kA	10 kA	**A307XN** ①	
14 – 20	1-1/2	3	5	7-1/2	15	20	65 kA	10 kA	**A307YN** ①	
17 – 22	2	3	7-1/2	7-1/2	15	20	65 kA	10 kA	**A307ZN** ①	
A308 ④										
11 – 16	1	3	5	5	10	15	65 kA	25 kA	**A308LN**	
14 – 20	1-1/2	3	5	7-1/2	15	20	65 kA	25 kA	**A308MN**	
18 – 25	2	5	7-1/2	10	20	25	65 kA	25 kA	**A308NN**	
22 – 32	3	5	10	10	25	30	65 kA	25 kA	**A308PN**	
28 – 40	3	7-1/2	15	15	30	40	65 kA	25 kA	**A308RN**	
36 – 45	5	7-1/2	15	15	30	40	65 kA	25 kA	**A308SN**	
40 – 50	5	10	15	20	40	50	65 kA	25 kA	**A308TN**	
A309										
28 – 40	3	7-1/2	15	15	30	40	65 kA	30 kA	**A309RN** ②	
36 – 50	5	10	15	20	40	50	65 kA	30 kA	**A309SN** ②	
45 – 63	5	15	20	25	50	60	65 kA	30 kA	**A309TN** ②	
57 – 75	7-1/2	15	25	25	60	75	65 kA	30 kA	**A309UN** ②	
70 – 90	10	20	30	30	75	100	65 kA	10 kA	**A309VN** ②	
80 – 100	10	25	40	40	75	100	65 kA	10 kA	**A309WN** ②	

① A C320LSA1 Line Side Adapter is required to be installed on the line side of all A307 MMPs when they are used as non-Group Installation Self-Protected Manual Combination Starters. See **Page 34-299**.

② A C320LSA2 Line Side Adapter is required to be installed on the line side of all A309 MMPs when they are used as non-Group Installation Self-Protected Manual Combination Starters. See **Page 34-299**.

③ Select UL 508 Type Manual Combination Starter by full load amperes. Horsepower ratings are for reference only.

④ A308 MMPs do not require Line Side Adapters.

Note: A UL 508 Type F Combination Motor Controller consists of a UL 508 Type E Self-protected Manual Combination Starter, a UL Listed Contactor and a UL Listed Line Side Adapter (depending on the application). The Type E Self-Protected Manual Combination Starter alone is a legitimate short-circuit protective device and disconnect means for the downstream motor, while the contactor has been added to provide remote operation of the motor circuit.

For motor with service factor of 1.15 or greater, use motor nameplate Full Load Amperes to select the appropriate MMP.

Example: For motor having FLA of 6.4A and service factor of 1.15, select Catalog Number A307UN.

Discount Symbol **1CD-1**

Accessories

Table 34-387. Accessories

	Description	Catalog Number	Price U.S. $
	**Front Mount Auxiliary Contact Blocks (Carton Quantity = 10 pcs.)** ① (For use with A307, A308 or A309 MMP. One block per MMP.) 1 SPDT Contact, NO/NC 1NO and 1NC 1 SPDT Contact, NO/NC (Electronic Contact). For use in dusty applications and electronic circuits with rated operational current Ie/AC-15 and DC-13 from 1 to 300 mA at 3 to 60V.	 **C320FDC11** **C320FMC11** **C320FEC11**	
	**Side Mount Auxiliary Contact Blocks (Carton Quantity = 2 pcs.)** (One block per MMP. Mounts to left side of A307, A308 or A309.) 1NO and 1NC 2NO 2NC	 **C320SA11** **C320SA20** **C320SA02**	
	**Trip Indicating Contacts — Side Mount** (One block per MMP. Mounts to left side of A307, A308 or A309. Can also be used with side mount auxiliary contact.) 1NO and 1NC for Any Trip (overload or short-circuit), plus 1NO and 1NC for Short-Circuit Trip Only	 **C320TR11**	
	Overload Dial Tamperproof Covers (Carton Quantity = 10 pcs.) (For sealing the FLA adjustment dial or A307, A308 or A309 MMPs.) (10 covers per bag. Price is for one bag.)	**C320CD1**	
	**Undervoltage Release** (One release module per MMP. Mounts to right side of A307, A308 or A309. Can not be used with shunt trip.) 120V 60 Hz; 110V 50 Hz 240V 60 Hz; 220V 50 Hz 400V 50 Hz 480V 60 Hz	 **C320UR120** **C320UR240** **C320UR400** **C320UR480**	
	Undervoltage Release with Early Make Contacts (One release module per MMP. Mounts to right side of A307, A308 or A309. Can not be used with shunt trip.) 230V 50 Hz 400V 50 Hz 480V 60 Hz	 **C320URE240** **C320URE400** **C320URE480**	
	**Shunt Trip** (One trip module per MMP. Mounts to right side of A307, A308 or A309. Can not be used with undervoltage release.) AC 50/60 Hz (100% ON) / AC 50/60 Hz; DC (5 Seconds ON) 20 – 24V / 20 – 70V 90 – 110V / 70 – 190V 210 – 240V / 190 – 330V 350 – 415V / 330 – 500V 500V / —	 **C320SH24** **C320SH120** **C320SH240** **C320SH480** **C320SH500**	
	**Thru-the-Door Operator** (Type 12, Rated IP65; Rotary Operator Mechanism, lockable with up to 3 padlocks in the OFF position. Includes extension shaft, connecting element and supporting bracket [330 mm depth only] to MMP.) Black Handle — 150 mm Depth — 330 mm Depth (Includes supporting bracket) Red Handle and Yellow Background — 150 mm Depth — 330 mm Depth (Includes supporting bracket)	 **C320HNB1** **C320HNB10** **C320HNR1** **C320HNR10**	
	Terminal Cover for Box Terminals, 50A A308 MMP Terminal Cover for Box Terminals, 100A A309 MMP Terminal Cover for Cable Lug and Busbar Connection, 100A A309 MMP	**C320CT50** **C320CT100** **C320CT110**	

① Consult sales office for MMP and auxiliary contact Series compatibility information.

Discount Symbol **1CD-1**

34

Table 34-387. Accessories (Continued)

	Description	Catalog Number	Price U.S. $
	**Three-Phase, Line Side Feeder Connecting Links** For 2 A307 MMPs, 45 mm Spacing, 63A Maximum For 3 A307 MMPs, 45 mm Spacing, 63A Maximum For 4 A307 MMPs, 45 mm Spacing, 63A Maximum For 5 A307 MMPs, 45 mm Spacing, 63A Maximum For 2 A307 MMPs, with Side Mount Accessories, 55 mm Spacing, 63A Maximum For 4 A307 MMPs, with Side Mount Accessories, 55 mm Spacing, 63A Maximum For 2 A307 MMPs, with Side Mount Accessories, 63 mm Spacing, 63A Maximum For 4 A307 MMPs, with Side Mount Accessories, 63 mm Spacing, 63A Maximum	 **C320BUS22** **C320BUS23** **C320BUS24** **C320BUS25** **C320BUS26** **C320BUS27** **C320BUS28** **C320BUS29**	
	**Three-Phase, Line Side Feeder Lug** (For use with A307 MMP and Line Side Feeder Connecting Links)	**C320BUS20**	
	**Three-Phase, Line Side Feeder Lugs** (For connection to bottom of Line Side Feeder Connecting Link instead of MMP)	**C320BUS21**	
	**Cover** (For Unused Line Side Feeder Connecting Links)	**C320BUS19**	
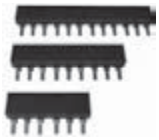	**Three-Phase, Line Side Feeder Connecting Links** For 2 A308 MMPs, 55 mm Spacing, 100A Maximum For 3 A308 MMPs, 55 mm Spacing, 100A Maximum For 4 A308 MMPs, 55 mm Spacing, 100A Maximum For 2 A308 MMPs, with Side Mount Accessories, 75 mm Spacing, 100A Maximum For 3 A308 MMPs, with Side Mount Accessories, 75 mm Spacing, 100A Maximum For 4 A308 MMPs, with Side Mount Accessories, 75 mm Spacing, 100A Maximum	 **C320BUS32** **C320BUS33** **C320BUS34** **C320BUS35** **C320BUS36** **C320BUS37**	
	**Three-Phase, Line Side Feeder Lug** (For use with A308 MMP and Line Side Feeder Connecting Links)	**C320BUS31**	
	**Cover** (For Unused Line Side Feeder Connecting Links)	**C320BUS30**	
	**IP55 Nonmetallic Enclosure (Narrow)** (For use with A307 MMP and Accessories with a maximum width of 54 mm) Black Handle Red/Yellow Handle **Note:** Enclosures will not accept A307 MMP with Side Mounted Trip Indicating Contact Module (C320TR11)	 **C799EMB55** **C799EMR55**	
	**IP55 Nonmetallic Enclosure (Wide)** (For use with A307 MMP and Accessories with a maximum width of 72 mm) Black Handle Red/Yellow Handle **Note:** Enclosures will not accept A307 MMP with Side Mounted Trip Indicating Contact Module (C320TR11)	 **C799WEB55** **C799WER55**	
	**IP55 Nonmetallic Enclosure (Wide)** (For use with A308 MMP and Accessories with a maximum width of 82 mm) Black Handle Red/Yellow Handle **Note:** Enclosures will not accept A308 MMP with Side Mounted Trip Indicating Contact Module (C320TR11)	 **C799WGB55** **C799WGR55**	
	**IP55 Nonmetallic Flush Mount Plate** (For use with A307 MMP and Accessories with a maximum width of 72 mm) Black Handle Red/Yellow Handle **Note:** Flush Plates will not accept A307 MMP with Side Mounted Trip Indicating Contact Module (C320TR11)	 **C799WFB55** **C799WFR55**	
	**IP55 Front Plate** (For A307, A308 or A309) Black Handle Red/Yellow Handle	 **C799FNB55** **C799FNR55**	

Discount Symbol **1CD-1**

Table 34-387. Accessories (Continued)

	Description	Catalog Number	Price U.S. $
	**Pilot Lights for All Enclosures** (With Lamp and Red, Green and Clear Colored Lenses) 110 – 120V 220 – 240V 380 – 415V 480 – 500V	 **C320LT120** **C320LT240** **C320LT415** **C320LT500**	
	**Push-In Mounting Holes** (For screw panel mounting of A307 MMP) Carton Qty: 10	**C321MH1**	
	**Line Side Adapter for A307 MMPs** (Required for use with A307 MMPs only when used as Self-Protected Manual Combination Starters) UL 508 Type E. Not required for Group Installation.	**C320LSA1**	
	**Line Side Adapter for A309 MMPs** ① (Required for use with A309 MMPs only when used as Self-Protected Manual Combination Starters) UL 508 Type E. Not required for Group Installation.	**C320LSA2**	
	**Wiring Connector Link** (Electrical and mechanical interconnection between A307 MMP + CE12 Freedom Miniature FVNR Contactor)	**C320WC25**	
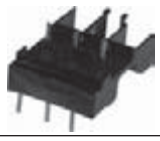	**Wiring Connector Link** (Electrical and mechanical interconnection between A307 MMP + CE15 Freedom 45 mm IEC FVNR Contactor — Sizes A – F)	**C320WC45**	
	**Wiring Connector Link** (Electrical and mechanical interconnection between A308 MMP + CE15 Freedom 65 mm IEC FVNR Contactor — Sizes G – K)	**C320WC65**	
	**Wiring Connector Link** (Electrical and mechanical interconnection between A307 MMP + ***IT.*** 27 mm FVNR/FVR Contactor)	**C320WC27**	
	**Wiring Connector Link** (Electrical and mechanical interconnection between A307 MMP + ***IT.*** 45 mm FVNR Contactor)	**C320WC45IT**	
	**Wiring Connector Link** (Electrical and mechanical interconnection between A308 MMP + ***IT.*** 54 mm FVNR Contactor)	**C320WC54**	

① A308 MMP does not require a Line Side Adapter.

Discount Symbol **1CD-1**

Contents

Description *Page*

Freedom IEC Combination Motor Controllers

Product Selection **34-301**
Accessories **34-307**
Dimensions **34-308**

34

Note: For more information, see CA03801001E.



AE317 Freedom IEC Open Non-reversing Combination Motor Controller

Product Description

The new Cutler-Hammer® Freedom IEC Open Non-reversing and Reversing Combination Motor Controllers from Eaton's electrical business combine a Manual Motor Protector with an IEC Contactor(s) to provide a complete motor protection solution by combining motor disconnect function, thermal overload protection, magnetic short circuit protection and remote control operation in one compact, assembled unit. These assembled Combination Motor Controllers cover motors with FLA ratings from 0.11A to 100A.

Application Description

The Freedom IEC Non-reversing and Reversing Combination Motor Controllers can be used in the following applications:

- Combination Motor Controller (UL 508, Type F), for Single and Multi Motor Panels — The IEC Combination Motor Controllers combine a Manual Motor Protector with an IEC Contactor. The A307, A308, and A309 Manual Motor Protectors are UL listed as UL 508, Type E Self-Protected Manual Combination Starters. This UL listing allows these devices to be used in motor circuits without having to add separate branch short circuit protection with a Line Side Adapter. An IEC magnetic contactor has been added to provide remote operation of the motor circuit.
- Group Motor Installations — Since the Manual Motor Protectors (Manual Combination Starters) are UL listed for Group Motor Installations, the IEC Combination Motor Controllers provide a compact, assembled package for Group Motor Installations up to 480V.

For Group Installations or UL 508 Type E/F applications, the A307, A308 and A309 Manual Motor Protectors have a maximum 600Y/347V rating.

For Group Installations (in-panel SCPD) applying the traditional 1/3 tap rule, Freedom Combination Motor Controllers may be used on 480V Delta systems. For Group Installations, applying the more recent 1/10 tap conductor rule, a maximum 240V Delta is permitted or 480Y/277V.

For actual UL 508 Type E/F applications (out-of-panel upstream feeder SCPD only), the Freedom CMCs may be used on a maximum 240V Delta or 480Y/277V system.

For Manual "At Motor" Disconnect applications, a maximum 240V Delta is permitted or 480Y/277V and 600Y/347V slash rated Wye systems.

Features

- ON/OFF rotary handle with lockout provision
- Visible trip indication
- Test trip function
- Motor applications from 0.11A to 100A
- Class 10 overload protection
- Built-in heater and magnetic trip elements to protect the motor
- Phase loss sensitivity
- Type 2 coordination
- Ambient compensated up to 140°F (60° C)
- High Fault Short Circuit Ratings:
  - 65 kA at 480V for AE317/357, AM317/357 and AE318/358 motor controllers
  - 50 kA at 480V for AE319/359 motor controllers

Table 34-388. Short Circuit Ratings — UL 508 Type E Manual Combination Starter/Motor Controller

Description	Specification
A307 ①	65 kA @ 240V, 480Y/277V 30 kA @ 600Y/347V up to 12.5A
A308 ①	65 kA @ 240V, 480Y/277V 25 kA @ 600Y/347V
A309 ①	65 kA @ 240V, 480Y/277V 30 kA @ 600Y/347V up to 75A

① See **Pages 34-295 – 34-296** for individual ratings.

- Magnet coil terminals located at bottom of Contactor for easy access and wiring
- AC and DC coils offered in a variety of voltages
- 1NO and 1NC auxiliary contacts front mounted on MMP — standard on all combination motor controllers
- 1NO auxiliary contact — standard on all magnetic contactors
- DIN rail or panel mount — AE317, AM317 and AM357 motor controllers
- Mounting plates — standard on AE318, AE319, AE358 and AE359 motor controllers
- Adjustment dial for setting motor FLA
- Short circuit trip at 13 times the maximum setting of the FLA adjustment dial

Standards and Certifications

- IEC Type 2 Approved per IEC 60947-4-1
- UL Listed File No. E218618
- CE Mark

Instructional Leaflets

IL49490	A307 Manual Motor Protector
IL49491	A308 Manual Motor Protector
IL49492	A309 Manual Motor Protector
Pub50278	Non-reversing AM317, AE317 & AE318 Combination Motor Controller, AC Coils
Pub50279	Reversing AE357 & AE358 Combination Motor Controllers, AC Coils
Pub50280	Reversing AM357 Combination Motor Controllers, AC & DC Coils
Pub50281	Non-reversing AM317, AE317, & AE318 Combination Motor Controllers, DC Coils
Pub50342	Non-reversing AE319 Combination Motor Controllers, AC & DC Coils
Pub50343	Reversing AE359 Combination Motor Controllers, AC & DC Coils
Pub50417	Reversing AE357 & AE358 Combination Motor Controllers, DC Coils
Pub50545	Wire Connector Link Installation
AP03402001E	Application Note

Product Selection



AM317 — Miniature Freedom IEC Open Non-reversing Combination Motor Controller

For use as CMCs in Group Installation or UL 508 Type F applications.

When Ordering Specify —

- Select required assembled motor controller by Catalog Number from **Table 34-389** and replace underscore (_) in the Catalog Number with the proper Magnetic Coil Code Suffix Letter from **Table 34-390**.
- All Non-reversing and Reversing motor controllers are selected based on the overload current range required for a given motor. This current range is determined from the motor Full Load Ampere rating and Motor Service Factor usually found on the motor nameplate.
- **For motors with service factors less than 1.15**, multiply the motor FLA by .92 to select the appropriate motor controller. Example: For a motor having FLA of 6.4A and a service factor of 1.0 (6.4A x .92 = 5.88A) select Catalog Number AM317TNS3_.
- **For motors with service factor of 1.15 or greater**, use motor nameplate Full Load Amperes to select the appropriate motor controller. Example: For motor having FLA of 6.4A and service factor of 1.15, select Catalog Number AM317UNS3_.

Instructional Leaflets

See **Page 34-300** for Listing.

Table 34-389. Freedom IEC Open Non-reversing Combination Motor Controllers (A307 Manual Motor Protector + C320WC25 Wiring Connector Link + CE12 IEC Miniature Contactor)

FLA Adjustment Range	Single-Phase hp Ratings ①		Three-Phase hp Ratings ①				Manual Motor Protector	IEC Non-reversing Contactor	Catalog Number ②③	Price U.S. $	
	115V	230V	200V	230V	460V	575V				AC Coil	DC Coil
0.11 – 0.16	—	—	—	—	—	—	A307AN	CE12BNC310_	**AM317ANS3_**		
0.14 – 0.20	—	—	—	—	—	—	A307BN	CE12BNC310_	**AM317BNS3_**		
0.18 – 0.25	—	—	—	—	—	—	A307CN	CE12BNC310_	**AM317CNS3_**		
0.22 – 0.32	—	—	—	—	—	—	A307DN	CE12BNC310_	**AM317DNS3_**		
0.28 – 0.40	—	—	—	—	—	—	A307EN	CE12BNC310_	**AM317ENS3_**		
0.35 – 0.50	—	—	—	—	—	—	A307FN	CE12BNC310_	**AM317FNS3_**		
0.45 – 0.63	—	—	—	—	—	1/4	A307GN	CE12BNC310_	**AM317GNS3_**		
0.55 – 0.8	—	—	—	—	1/4	1/2	A307HN	CE12BNC310_	**AM317HNS3_**		
0.7 – 1.0	—	—	—	—	1/2	1/2	A307JN	CE12BNC310_	**AM317JNS3_**		
0.9 – 1.25	—	—	—	1/4	3/4	3/4	A307KN	CE12BNC310_	**AM317KNS3_**		
1.1 – 1.6	—	1/10	1/4	1/3	3/4	1	A307LN	CE12BNC310_	**AM317LNS3_**		
1.4 – 2.0	—	1/8	1/3	1/2	1	1-1/2	A307MN	CE12BNC310_	**AM317MNS3_**		
1.8 – 2.5	—	1/6	1/2	1/2	1-1/2	1-1/2	A307NN	CE12BNC310_	**AM317NNS3_**		
2.2 – 3.2	1/10	1/4	3/4	3/4	1-1/2	2	A307PN	CE12BNC310_	**AM317PNS3_**		
2.8 – 4.0	1/8	1/3	3/4	1	2	3	A307RN	CE12BNC310_	**AM317RNS3_**		
3.5 – 5.0	1/6	1/2	1	1	3	3	A307SN	CE12BNC310_	**AM317SNS3_**		
4.5 – 6.3	1/4	3/4	1-1/2	1-1/2	5	5	A307TN	CE12CNC310_	**AM317TNS3_**		
5.5 – 8.0	1/3	1	2	2	5	5	A307UN	CE12CNC310_	**AM317UNS3_**		
7.0 – 10.0	1/2	1-1/2	3	3	7-1/2	10	A307VN	CE12CNC310_	**AM317VNS3_**		

① Select motor controller by motor Full Load Amperes. Horsepower ratings are for reference only.
② Underscore (_) indicates Magnetic Coil Suffix required. See **Table 34-390** below.
③ DIN rail mounting. No mounting plate included.

Table 34-390. AC and DC Coil Suffixes

Coil Volts and Hertz	Code Suffix
AC Coils	
120/60 or 110/50	**A**
240/60 or 220/50	**B**
480/60 or 440/50	**C**
600/60 or 550/50	**D**
208/60	**E**
277/60	**H**
380 – 415/50	**L**
24/60, 24/50	**T**
DC Coils	
120V DC	**A1**
12V DC	**R1**
24V DC	**T1**
48V DC	**W1**

Notes —

- Each Combination Motor Controller Includes: (1) C320FMC11 Front Mount Auxiliary Contact 1NO/1NC.
- For information on the usage of Line Side Adapters, see **Table 34-403**, **Page 34-307**.

Note: For more information on Manual Motor Protectors and Wiring Connector Links refer to **Pages 34-294** – **34-299**. For Freedom Contactors refer to **Pages 34-261 – 34-289**.

Accessories ..... **Page 34-307**
Dimensions ..... **Page 34-308**
Discount Symbol **1CD7**

34



AM357 — Miniature Freedom IEC Open Reversing Combination Motor Controller

For use as CMCs in Group Installation or UL 508 Type F applications.

When Ordering Specify —

- Select required assembled motor controller by Catalog Number from **Table 34-391** and replace underscore (_) in the Catalog Number with the proper Magnetic Coil Code Suffix Letter from **Table 34-392**.
- All Non-reversing and Reversing motor controllers are selected based on the overload current range required for a given motor. This current range is determined from the motor Full Load Ampere rating and Motor Service Factor usually found on the motor nameplate.
- **For motors with service factors less than 1.15**, multiply the motor FLA by .92 to select the appropriate motor controller. Example: For a motor having FLA of 6.4A and a service factor of 1.0 (6.4A x .92 = 5.88A) select Catalog Number AM357TNS3_.
- **For motors with service factor of 1.15 or greater**, use motor nameplate Full Load Amperes to select the appropriate motor controller. Example: For motor having FLA of 6.4A and service factor of 1.15, select Catalog Number AM357UNS3_.

Instructional Leaflets

See **Page 34-300** for Listing.

Table 34-391. Freedom IEC Open Reversing Combination Motor Controllers (A307 Manual Motor Protector + C320WC25 Wiring Connector Link + CE52 IEC Miniature Reversing Contactor)

FLA Adjustment Range	Single-Phase hp Ratings ①		Three-Phase hp Ratings ①				Manual Motor Protector	IEC Reversing Contactor	Catalog Number ②③	Price U.S. $	
	115V	230V	200V	230V	460V	575V				AC Coil	DC Coil
0.11 – 0.16	—	—	—	—	—	—	A307AN	CE52BNC310_	**AM357ANS3_**		
0.14 – 0.20	—	—	—	—	—	—	A307BN	CE52BNC310_	**AM357BNS3_**		
0.18 – 0.25	—	—	—	—	—	—	A307CN	CE52BNC310_	**AM357CNS3_**		
0.22 – 0.32	—	—	—	—	—	—	A307DN	CE52BNC310_	**AM357DNS3_**		
0.28 – 0.40	—	—	—	—	—	—	A307EN	CE52BNC310_	**AM357ENS3_**		
0.35 – 0.50	—	—	—	—	—	—	A307FN	CE52BNC310_	**AM357FNS3_**		
0.45 – 0.63	—	—	—	—	—	1/4	A307GN	CE52BNC310_	**AM357GNS3_**		
0.55 – 0.8	—	—	—	—	1/4	1/2	A307HN	CE52BNC310_	**AM357HNS3_**		
0.7 – 1.0	—	—	—	—	1/2	1/2	A307JN	CE52BNC310_	**AM357JNS3_**		
0.9 – 1.25	—	—	—	1/4	3/4	3/4	A307KN	CE52BNC310_	**AM357KNS3_**		
1.1 – 1.6	—	1/10	1/4	1/3	3/4	1	A307LN	CE52BNC310_	**AM357LNS3_**		
1.4 – 2.0	—	1/8	1/3	1/2	1	1-1/2	A307MN	CE52BNC310_	**AM357MNS3_**		
1.8 – 2.5	—	1/6	1/2	1/2	1-1/2	1-1/2	A307NN	CE52BNC310_	**AM357NNS3_**		
2.2 – 3.2	1/10	1/4	3/4	3/4	1-1/2	2	A307PN	CE52BNC310_	**AM357PNS3_**		
2.8 – 4.0	1/8	1/3	3/4	1	2	3	A307RN	CE52BNC310_	**AM357RNS3_**		
3.5 – 5.0	1/6	1/2	1	1	3	3	A307SN	CE52BNC310_	**AM357SNS3_**		
4.5 – 6.3	1/4	3/4	1-1/2	1-1/2	5	5	A307TN	CE52CNC310_	**AM357TNS3_**		
5.5 – 8.0	1/3	1	2	2	5	5	A307UN	CE52CNC310_	**AM357UNS3_**		
7.0 – 10.0	1/2	1-1/2	3	3	7-1/2	10	A307VN	CE52CNC310_	**AM357VNS3_**		

① Select motor controller by motor Full Load Amperes. Horsepower ratings are for reference only.
② Underscore (_) indicates Magnetic Coil Suffix required. See **Table 34-392** below.
③ DIN rail mounting. No mounting plate included.

Table 34-392. AC and DC Coil Suffixes

Coil Volts and Hertz	Code Suffix
AC Coils	
120/60 or 110/50	**A**
240/60 or 220/50	**B**
480/60 or 440/50	**C**
600/60 or 550/50	**D**
208/60	**E**
277/60	**H**
380 – 415/50	**L**
24/60, 24/50	**T**
DC Coils	
120V DC	**A1**
12V DC	**R1**
24V DC	**T1**
48V DC	**W1**

Notes —

- Each Combination Motor Controller Includes: (1) C320FMC11 Front Mount Auxiliary Contact 1NO/1NC.
- For information on the usage of Line Side Adapters, see **Table 34-403**, **Page 34-307**.

Note: For more information on Manual Motor Protectors and Wiring Connector Links refer to **Pages 34-294** – **34-299**. For Freedom Contactors refer to **Pages 34-261 – 34-289**.

Accessories ..... **Page 34-307**
Dimensions ..... **Page 34-308**
Discount Symbol **1CD7**



AE317 Freedom IEC Open Non-reversing Combination Motor Controller

For use as CMCs in Group Installation or UL 508 Type F applications.

When Ordering Specify —

- Select required assembled motor controller by Catalog Number from **Table 34-393** and replace underscore (_) in the Catalog Number with the proper Magnetic Coil Code Suffix Letter from **Table 34-394**.
- All Non-reversing and Reversing motor controllers are selected based on the overload current range required for a given motor. This current range is determined from the motor Full Load Ampere rating and Motor Service Factor usually found on the motor nameplate.
- **For motors with service factors less than 1.15**, multiply the motor FLA by .92 to select the appropriate motor controller. Example: For a motor having FLA of 6.4A and a service factor of 1.0 (6.4A x .92 = 5.88A) select Catalog Number AE317TNS3_.
- **For motors with service factor of 1.15 or greater**, use motor nameplate Full Load Amperes to select the appropriate motor controller. Example: For motor having FLA of 6.4A and service factor of 1.15, select Catalog Number AE317UNS3_.

Instructional Leaflets

See **Page 34-300** for Listing.

Table 34-393. Freedom IEC Open Non-reversing Combination Motor Controllers (A307 Manual Motor Protector + C320WC45 Wiring Connector Link + CE15 IEC 45 mm Contactor)

FLA Adjustment Range	Single-Phase hp Ratings ①		Three-Phase hp Ratings ①				Manual Motor Protector	IEC Non-reversing Contactor	Catalog Number ②③	Price U.S. $	
	115V	230V	200V	230V	460V	575V				AC Coil	DC Coil
0.11 – 0.16	—	—	—	—	—	—	A307AN	CE15ANSC3_B	**AE317ANS3_**		
0.14 – 0.20	—	—	—	—	—	—	A307BN	CE15ANSC3_B	**AE317BNS3_**		
0.18 – 0.25	—	—	—	—	—	—	A307CN	CE15ANSC3_B	**AE317CNS3_**		
0.22 – 0.32	—	—	—	—	—	—	A307DN	CE15ANSC3_B	**AE317DNS3_**		
0.28 – 0.40	—	—	—	—	—	—	A307EN	CE15ANSC3_B	**AE317ENS3_**		
0.35 – 0.50	—	—	—	—	—	—	A307FN	CE15ANSC3_B	**AE317FNS3_**		
0.45 – 0.63	—	—	—	—	—	1/4	A307GN	CE15ANSC3_B	**AE317GNS3_**		
0.55 – 0.8	—	—	—	—	1/4	1/2	A307HN	CE15ANSC3_B	**AE317HNS3_**		
0.7 – 1.0	—	—	—	—	1/2	1/2	A307JN	CE15ANSC3_B	**AE317JNS3_**		
0.9 – 1.25	—	—	—	1/4	3/4	3/4	A307KN	CE15ANSC3_B	**AE317KNS3_**		
1.1 – 1.6	—	1/10	1/4	1/3	3/4	1	A307LN	CE15ANSC3_B	**AE317LNS3_**		
1.4 – 2.0	—	1/8	1/3	1/2	1	1-1/2	A307MN	CE15ANSC3_B	**AE317MNS3_**		
1.8 – 2.5	—	1/6	1/2	1/2	1-1/2	1-1/2	A307NN	CE15ANSC3_B	**AE317NNS3_**		
2.2 – 3.2	1/10	1/4	3/4	3/4	1-1/2	2	A307PN	CE15ANSC3_B	**AE317PNS3_**		
2.8 – 4.0	1/8	1/3	3/4	1	2	3	A307RN	CE15ANSC3_B	**AE317RNS3_**		
3.5 – 5.0	1/6	1/2	1	1	3	3	A307SN	CE15ANSC3_B	**AE317SNS3_**		
4.5 – 6.3	1/4	3/4	1-1/2	1-1/2	5	5	A307TN	CE15BNSC3_B	**AE317TNS3_**		
5.5 – 8.0	1/3	1	2	2	5	5	A307UN	CE15BNSC3_B	**AE317UNS3_**		
7.0 – 10.0	1/2	1-1/2	3	3	7-1/2	10	A307VN	CE15CNSC3_B	**AE317VNS3_**		
9.0 – 12.5	1/2	2	3	3	7-1/2	10	A307WN	CE15CNSC3_B	**AE317WNS3_**		
11.0 – 16.0	1	3	5	5	10	15	A307XN	CE15DNSC3_B	**AE317XNS3_**		
14.0 – 20.0	1-1/2	3	5	7-1/2	15	20	A307YN	CE15ENSC3_B	**AE317YNS3_**		
17.0 – 22.0	2	3	7-1/2	7-1/2	15	20	A307ZN	CE15FNSC3_B	**AE317ZNS3_**		

① Select motor controller by motor Full Load Amperes. Horsepower ratings are for reference only.
② Underscore (_) indicates Magnetic Coil Suffix required. See **Table 34-394** below.
③ DIN rail mounting. No mounting plate included.

Table 34-394. AC and DC Coil Suffixes

Coil Volts and Hertz	Code Suffix
AC Coils	
120/60 or 110/50	**A**
240/60 or 220/50	**B**
480/60 or 440/50	**C**
600/60 or 550/50	**D**
208/60	**E**
277/60	**H**
380 – 415/50	**L**
24/60, 24/50	**T**
DC Coils	
120V DC	**A1**
12V DC	**R1**
24V DC	**T1**
48V DC	**W1**

Notes —

- Each Combination Motor Controller Includes: (1) C320FMC11 Front Mount Auxiliary Contact 1NO/1NC.
  - The auxiliary contact is designated by the **S** in the following Catalog Number example: AE317AN**S**3A.
- The CE15***__C__* signifies a black base, A1 & A2 coil terminals at the bottom and black printing on the label.
- For information on the usage of Line Side Adapters, see **Table 34-403**, **Page 34-307**.

Note: For more information on Manual Motor Protectors and Wiring Connector Links refer to **Pages 34-294** – **34-299**. For Freedom Contactors refer to **Pages 34-261 – 34-289**.

Accessories ..... **Page 34-307**
Dimensions ..... **Page 34-308**
Discount Symbol **1CD7**

34

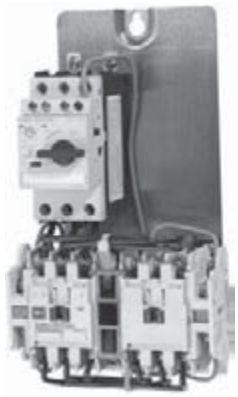

AE357 — Freedom IEC Open Reversing Combination Motor Controller

For use as CMCs in Group Installation or UL 508 Type F applications.

When Ordering Specify —

- Select required assembled motor controller by Catalog Number from **Table 34-395** and replace underscore (_) in the Catalog Number with the proper Magnetic Coil Code Suffix Letter from **Table 34-396**.
- All Non-reversing and Reversing motor controllers are selected based on the overload current range required for a given motor. This current range is determined from the motor Full Load Ampere rating and Motor Service Factor usually found on the motor nameplate.
- **For motors with service factors less than 1.15**, multiply the motor FLA by .92 to select the appropriate motor controller. Example: For a motor having FLA of 6.4A and a service factor of 1.0 (6.4A x .92 = 5.88A) select Catalog Number AE357TNS3_.
- **For motors with service factor of 1.15 or greater**, use motor nameplate Full Load Amperes to select the appropriate motor controller. Example: For motor having FLA of 6.4A and service factor of 1.15, select Catalog Number AE357UNS3_.

Instructional Leaflets

See **Page 34-300** for Listing.

Table 34-395. Freedom IEC Open Reversing Combination Motor Controllers (A307 Manual Motor Protector + CE55 IEC 45 mm Reversing Contactor)

FLA Adjustment Range	Single-Phase hp Ratings ①		Three-Phase hp Ratings ①				Manual Motor Protector	IEC Reversing Contactor	Catalog Number ②③④	Price U.S. $	
	115V	230V	200V	230V	460V	575V				AC Coil	DC Coil
0.11 – 0.16	—	—	—	—	—	—	A307AN	CE55ANSC3_B	**AE357ANS3_**		
0.14 – 0.20	—	—	—	—	—	—	A307BN	CE55ANSC3_B	**AE357BNS3_**		
0.18 – 0.25	—	—	—	—	—	—	A307CN	CE55ANSC3_B	**AE357CNS3_**		
0.22 – 0.32	—	—	—	—	—	—	A307DN	CE55ANSC3_B	**AE357DNS3_**		
0.28 – 0.40	—	—	—	—	—	—	A307EN	CE55ANSC3_B	**AE357ENS3_**		
0.35 – 0.50	—	—	—	—	—	—	A307FN	CE55ANSC3_B	**AE357FNS3_**		
0.45 – 0.63	—	—	—	—	—	1/4	A307GN	CE55ANSC3_B	**AE357GNS3_**		
0.55 – 0.8	—	—	—	—	1/4	1/2	A307HN	CE55ANSC3_B	**AE357HNS3_**		
0.7 – 1.0	—	—	—	—	1/2	1/2	A307JN	CE55ANSC3_B	**AE357JNS3_**		
0.9 – 1.25	—	—	—	1/4	3/4	3/4	A307KN	CE55ANSC3_B	**AE357KNS3_**		
1.1 – 1.6	—	1/10	1/4	1/3	3/4	1	A307LN	CE55ANSC3_B	**AE357LNS3_**		
1.4 – 2.0	—	1/8	1/3	1/2	1	1-1/2	A307MN	CE55ANSC3_B	**AE357MNS3_**		
1.8 – 2.5	—	1/6	1/2	1/2	1-1/2	1-1/2	A307NN	CE55ANSC3_B	**AE357NNS3_**		
2.2 – 3.2	1/10	1/4	3/4	3/4	1-1/2	2	A307PN	CE55ANSC3_B	**AE357PNS3_**		
2.8 – 4.0	1/8	1/3	3/4	1	2	3	A307RN	CE55ANSC3_B	**AE357RNS3_**		
3.5 – 5.0	1/6	1/2	1	1	3	3	A307SN	CE55ANSC3_B	**AE357SNS3_**		
4.5 – 6.3	1/4	3/4	1-1/2	1-1/2	5	5	A307TN	CE55BNSC3_B	**AE357TNS3_**		
5.5 – 8.0	1/3	1	2	2	5	5	A307UN	CE55BNSC3_B	**AE357UNS3_**		
7.0 – 10.0	1/2	1-1/2	3	3	7-1/2	10	A307VN	CE55CNSC3_B	**AE357VNS3_**		
9.0 – 12.5	1/2	2	3	3	7-1/2	10	A307WN	CE55CNSC3_B	**AE357WNS3_**		
11.0 – 16.0	1	3	5	5	10	15	A307XN	CE55DNSC3_B	**AE357XNS3_**		
14.0 – 20.0	1-1/2	3	5	7-1/2	15	20	A307YN	CE55ENSC3_B	**AE357YNS3_**		
17.0 – 22.0	2	3	7-1/2	7-1/2	15	20	A307ZN	CE55FNSC3_B	**AE357ZNS3_**		

① Select motor controller by motor Full Load Amperes. Horsepower ratings are for reference only.
② Underscore (_) indicates Magnetic Coil Suffix required. See **Table 34-396** below.
③ Mounting plate included.
④ Add -**DIN** Modification Code for DIN Rail mounting of contactors with MMP and Wiring Connector Link.

Table 34-396. AC and DC Coil Suffixes

Coil Volts and Hertz	Code Suffix
AC Coils	
120/60 or 110/50	**A**
240/60 or 220/50	**B**
480/60 or 440/50	**C**
600/60 or 550/50	**D**
208/60	**E**
277/60	**H**
380 – 415/50	**L**
24/60, 24/50	**T**
DC Coils	
120V DC	**A1**
12V DC	**R1**
24V DC	**T1**
48V DC	**W1**

Notes —

- Each Combination Motor Controller Includes: (1) C320FMC11 Front Mount Auxiliary Contact 1NO/1NC.
  - The auxiliary contact is designated by the **S** in the following Catalog Number example: AE357AN**S**3A.
- The CE55***C* signifies a black base, A1 & A2 coil terminals at the bottom and black printing on the label.
- For information on the usage of Line Side Adapters, see **Table 34-403**, **Page 34-307**.

Note: For more information on Manual Motor Protectors and Wiring Connector Links refer to **Pages 34-294** – **34-299**. For Freedom Contactors refer to **Pages 34-261 – 34-289**.

Accessories ..... **Page 34-307**
Dimensions ..... **Page 34-308**
Discount Symbol **1CD7**

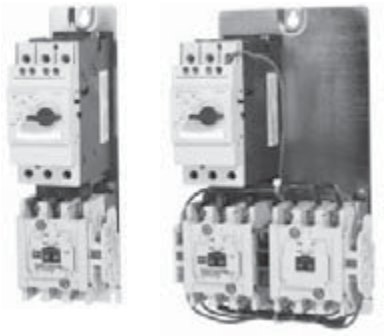

AE318 & AE358 — Freedom IEC Open Non-reversing and IEC Open Reversing Combination Motor Controllers

For use as CMCs in Group Installation or UL 508 Type F applications.

When Ordering Specify —

- Select required assembled motor controller by Catalog Number from **Table 34-397** or **Table 34-398** and replace underscore (_) in the Catalog Number with the proper Magnetic Coil Code Suffix Letter from **Table 34-399**.
- All Non-reversing and Reversing motor controllers are selected based on the overload current range required for a given motor. This current range is determined from the motor Full Load Ampere rating and Motor Service Factor usually found on the motor nameplate.
- **For motors with service factors less than 1.15**, multiply the motor FLA by .92 to select the appropriate motor controller. Example: For a motor having FLA of 45A and a service factor of 1.0 (45A x .92 = 41.40A) select Catalog Number AE318SNS3_.
- **For motors with service factor of 1.15 or greater**, use motor nameplate Full Load Amperes to select the appropriate motor controller. Example: For motor having FLA of 45A and service factor of 1.15, select Catalog Number AE318TNS3_.

Instructional Leaflets

See **Page 34-300** for Listing.

Table 34-397. Freedom IEC Open Non-reversing Combination Motor Controllers (A308 Manual Motor Protector + C320WC65 Wiring Connector Link + CE15 IEC 65 mm Contactor)

FLA Adjustment Range	Single-Phase hp Ratings ①		Three-Phase hp Ratings ①				Manual Motor Protector	IEC Non-reversing Contactor	Catalog Number ②③	Price U.S. $	
	115V	230V	200V	230V	460V	575V				AC Coil	DC Coil
11 – 16	1	3	5	5	10	15	A308LN	CE15GNSC3_B	**AE318LNS3_**		
14 – 20	1-1/2	3	5	7-1/2	15	20	A308MN	CE15GNSC3_B	**AE318MNS3_**		
18 – 25	2	5	7-1/2	10	20	25	A308NN	CE15GNSC3_B	**AE318NNS3_**		
22 – 32	2	5	10	10	25	30	A308PN	CE15HNSC3_B	**AE318PNS3_**		
28 – 40	3	7-1/2	10	15	30	40	A308RN	CE15JNSC3_B	**AE318RNS3_**		
36 – 45	3	7-1/2	15	15	30	40	A308SN	CE15JNSC3_B	**AE318SNS3_**		
40 – 50	3	10	15	15	40	50	A308TN	CE15JNSC3_B	**AE318TNS3_**		

① Select motor controller by motor Full Load Amperes. Horsepower ratings are for reference only.
② Underscore (_) indicates Magnetic Coil Suffix required. See **Table 34-399** below.
③ Mounting plate included.

Table 34-398. Freedom IEC Open Reversing Combination Motor Controllers (A308 Manual Motor Protector + CE55 IEC 65 mm Reversing Contactor)

FLA Adjustment Range	Single-Phase hp Ratings ④		Three-Phase hp Ratings ④				Manual Motor Protector	IEC Reversing Contactor	Catalog Number ⑤⑥	Price U.S. $	
	115V	230V	200V	230V	460V	575V				AC Coil	DC Coil
11 – 16	1	3	5	5	10	15	A308LN	CE55GNSC3_B	**AE358LNS3_**		
14 – 20	1-1/2	3	5	7-1/2	15	20	A308MN	CE55GNSC3_B	**AE358MNS3_**		
18 – 25	2	5	7-1/2	10	20	25	A308NN	CE55GNSC3_B	**AE358NNS3_**		
22 – 32	2	5	10	10	25	30	A308PN	CE55HNSC3_B	**AE358PNS3_**		
28 – 40	3	7-1/2	10	15	30	40	A308RN	CE55JNSC3_B	**AE358RNS3_**		
36 – 45	3	7-1/2	15	15	30	40	A308SN	CE55JNSC3_B	**AE358SNS3_**		
40 – 50	3	10	15	15	40	50	A308TN	CE55JNSC3_B	**AE358TNS3_**		

④ Select motor controller by motor Full Load Amperes. Horsepower ratings are for reference only.
⑤ Underscore (_) indicates Magnetic Coil Suffix required. See **Table 34-399** below.
⑥ Mounting plate included.

Table 34-399. AC and DC Coil Suffixes

Coil Volts and Hertz	Code Suffix
AC Coils	
120/60 or 110/50	**A**
240/60 or 220/50	**B**
480/60 or 440/50	**C**
600/60 or 550/50	**D**
208/60	**E**
277/60	**H**
380 – 415/50	**L**
24/60, 24/50	**T**
DC Coils	
120V DC	**A1**
12V DC	**R1**
24V DC	**T1**
48V DC	**W1**

Notes —

- Each Combination Motor Controller Includes: (1) C320FMC11 Front Mount Auxiliary Contact 1NO/1NC.
  - The auxiliary contact is designated by the **S** in the following Catalog Number example: AE318RN**S**3A or AE358RN**S**3A.
- The CE15/55***C* signifies a black base, A1 & A2 coil terminals at the bottom and black printing on the label.
- Modified 65 mm CE15/55 Contactors only with coil terminals at bottom will not allow the use of top mounted accessories.

Note: For more information on Manual Motor Protectors and Wiring Connector Links refer to **Pages 34-294 – 34-299**. For Freedom Contactors refer to **Pages 34-261 – 34-289**.

Accessories . . . . . **Page 34-307**
Dimensions. . . . . **Pages 34-309, 34-310**
Discount Symbol **1CD7**



AE319 & AE359 — Freedom IEC Open Non-reversing and IEC Open Reversing Combination Motor Controllers

For use as CMCs in Group Installation or UL 508 Type F applications.

When Ordering Specify —

- Select required assembled motor controller by Catalog Number from **Table 34-400** or **Table 34-401** and replace underscore (_) in the Catalog Number with the proper Magnetic Coil Code Suffix Letter from **Table 34-402**.
- All Non-reversing and Reversing motor controllers are selected based on the overload current range required for a given motor. This current range is determined from the motor Full Load Ampere rating and Motor Service Factor usually found on the motor nameplate.
- **For motors with service factors less than 1.15**, multiply the motor FLA by .92 to select the appropriate motor controller. Example: For a motor having FLA of 45A and a service factor of 1.0 (45A x .92 = 41.40A) select Catalog Number AE319SNS3_.
- **For motors with service factor of 1.15 or greater**, use motor nameplate Full Load Amperes to select the appropriate motor controller. Example: For motor having FLA of 45A and service factor of 1.15, select Catalog Number AE319TNS3_.

Instructional Leaflets

See **Page 34-300** for Listing.

Table 34-400. Freedom IEC Open Non-reversing Combination Motor Controllers (C320LSA2, A309 Manual Motor Protector + CE15 IEC 90 mm Contactor)

FLA Adjustment Range	Single-Phase hp Ratings ①		Three-Phase hp Ratings ①				Manual Motor Protector	IEC Non-reversing Contactor	Catalog Number ②③	Price U.S. $	
	115V	230V	200V	230V	460V	575V				AC Coil	DC Coil
28 – 40	3	7-1/2	15	15	30	40	A309RN	CE15LNC3	**AE319RNS3_**		
36 – 50	3	10	15	20	40	50	A309SN	CE15LNC3	**AE319SNS3_**		
45 – 63	5	15	20	25	50	60	A309TN	CE15LNC3	**AE319TNS3_**		
57 – 75	7-1/2	15	25	25	60	75	A309UN	CE15LNC3	**AE319UNS3_**		
70 – 90	10	20	30	30	75	100	A309VN	CE15MNC3	**AE319VNS3_**		
80 – 100	10	20	30	30	75	100	A309WN	CE15NNC3	**AE319WNS3_**		

① Select motor controller by motor Full Load Amperes. Horsepower ratings are for reference only.
② Underscore (_) indicates Magnetic Coil Suffix required. See **Table 34-402** below.
③ Mounting plate included.

Table 34-401. Freedom IEC Open Reversing Combination Motor Controllers (C320LSA2, A309 Manual Motor Protector + CE55 IEC 90 mm Reversing Contactor)

FLA Adjustment Range	Single-Phase hp Ratings ④		Three-Phase hp Ratings ④				Manual Motor Protector	IEC Reversing Contactor	Catalog Number ⑤⑥	Price U.S. $	
	115V	230V	200V	230V	460V	575V				AC Coil	DC Coil
28 – 40	3	7-1/2	15	15	30	40	A309RN	CE55LNC3	**AE359RNS3_**		
36 – 50	3	10	15	20	40	50	A309SN	CE55LNC3	**AE359SNS3_**		
45 – 63	5	15	20	25	50	60	A309TN	CE55LNC3	**AE359TNS3_**		
57 – 75	7-1/2	15	25	25	60	75	A309UN	CE55LNC3	**AE359UNS3_**		
70 – 90	10	20	30	30	75	100	A309VN	CE55MNC3	**AE359VNS3_**		
80 – 100	10	20	30	30	75	100	A309WN	CE55NNC3	**AE359WNS3_**		

④ Select motor controller by motor Full Load Amperes. Horsepower ratings are for reference only.
⑤ Underscore (_) indicates Magnetic Coil Suffix required. See **Table 34-402** below.
⑥ Mounting plate included.

Table 34-402. AC and DC Coil Suffixes

Coil Volts and Hertz	Code Suffix
AC Coils	
120/60 or 110/50	**A**
240/60 or 220/50	**B**
480/60 or 440/50	**C**
600/60 or 550/50	**D**
208/60	**E**
277/60	**H**
380 – 415/50	**L**
24/60, 24/50	**T**
DC Coils	
120V DC	**A1**
12V DC	**R1**
24V DC	**T1**
48V DC	**W1**

Notes —

- Each Combination Motor Controller Includes: (1) C320FMC11 Front Mount Auxiliary Contact 1NO/1NC and (1) C320LSA2 Line Side Adapter.
  - ❑ The auxiliary contact is designated by the **S** in the following Catalog Number example: AE319SN**S**3A or AE359SN**S**3A.
- The CE15/55***__**C**__* signifies a black base, A1 & A2 coil terminals at the bottom and black printing on the label.

Note: For more information on Manual Motor Protectors and Wiring Connector Links refer to **Pages 34-294** – **34-299**. For Freedom Contactors refer to **Pages 34-261 – 34-289**.

Accessories ..... **Page 34-307**
Dimensions ..... **Pages 34-309, 34-310**
Discount Symbol **1CD7**

Accessories

Table 34-403. Line Side Adapters (C320LSA1 and C320LSA2) — When to Use Them for U.S. Applications

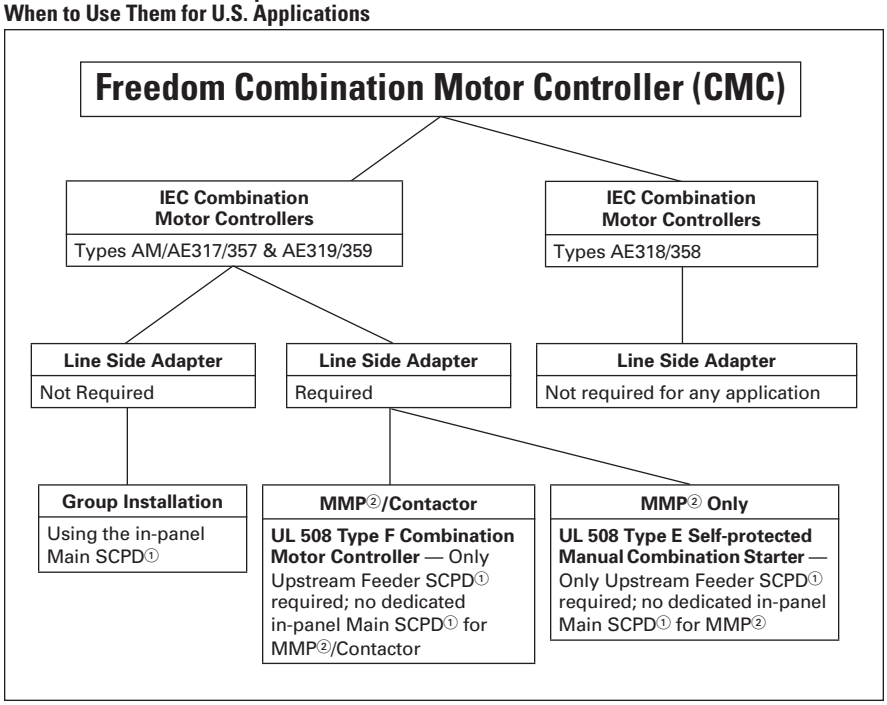

① SCPD = Short Circuit Protective Device (Circuit Breaker, Fuses).
② MMP = Manual Motor Protector.

Reference: Technical Paper AP03402001E.

Note: Line Side Adapters are not required for non-U.S. applications. Most countries outside of the U.S. classify the MMP as a thermal magnetic circuit breaker.

Table 34-404. Accessories

	Description	Catalog Number	Price U.S. $
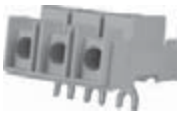	**Line Side Adapter for A307 MMPs** (Required for use with A307 MMPs only when used as Self-Protected Manual Combination Starters. Not required for Group Installation.)	**C320LSA1**	
	**Line Side Adapter for A309 MMPs** ③ (Required for use with A309 MMPs only when used as Self-Protected Manual Combination Starters. Not required for Group Installation.).	**C320LSA2**	
	**Wiring Connector Link** (Electrical and mechanical interconnection between A307 MMP + CE12 Freedom Miniature FVNR/FVR Contactor)	**C320WC25**	
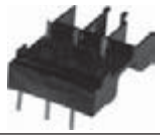	**Wiring Connector Link** (Electrical and mechanical interconnection between A307 MMP + CE15 Freedom 45 mm IEC FVNR Contactor — Sizes A – F)	**C320WC45**	
	**Wiring Connector Link** (Electrical and mechanical interconnection between A308 MMP + CE15 Freedom 65 mm IEC FVNR Contactor — Sizes G – K)	**C320WC65**	

③ A308 MMP does not require a Line Side Adapter.

Protection in Different Controller Types

A *UL 508 Type E Self-protected Manual Combination Starter/Motor Controller* consists of a single device having integral short circuit protection, a main set of contacts, motor overload protection, and may also include a UL Listed Line Side Adapter (see **Table 34-403**). This type of controller is a legitimate short-circuit circuit protective device and disconnect means for the downstream motor. It does require an upstream feeder short circuit protective device, but does not require a dedicated branch circuit protection or a disconnect means. A UL 508 Type E rating means that the unit clears a fault and does not experience any welding of the power poles. A UL 508 Type E self-protected manual motor controller will remain fully functional should a short circuit within its ratings occur. E.g. A307, A308 and A309.

A *UL 508 Type F Combination Motor Controller* consists of a UL Listed Type E Self-protected Manual Combination Starter/Motor Controller, a UL Listed Contactor, and possibly a UL Listed Line Side Adapter (see **Table 34-403**). While the UL 508 Type E self-protected manual motor controller of this combination motor controller device is a legitimate short circuit protective device and disconnect means for the downstream motor, the contactor is *not* "self-protected." E.g. AM317 – AE319 and AM357 – AE359.

In addition, as a complete assembly or with modular components, the device may have Type 2 Coordination certification. Type 2 Coordination means the Starter or Controller must exhibit little or no damage following a major short circuit fault and should be able to be returned to proper service without replacing any parts. E.g. All Freedom CMCs and MMPs.

Discount Symbol **1CD1**

Dimensions

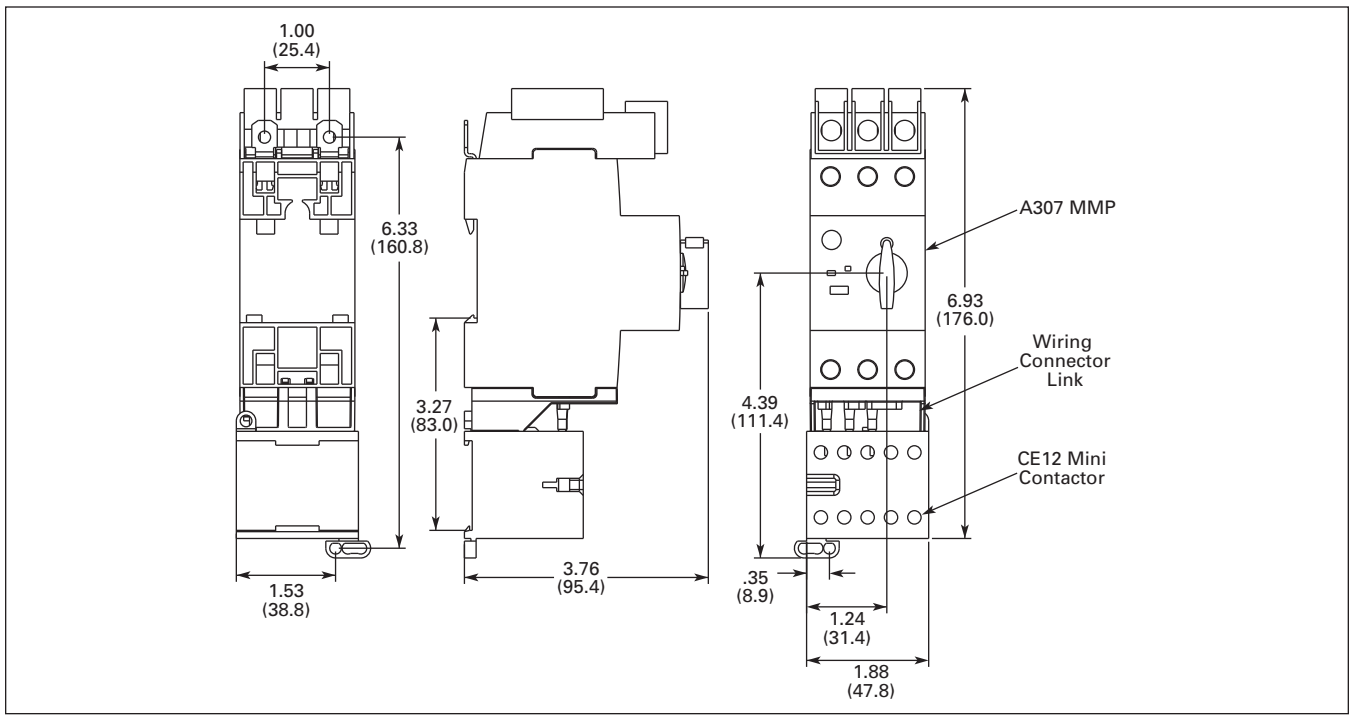

Figure 34-169. Non-reversing Combination Motor Controller AM317 (A307 MMP + C320WC25 WCL + CE12 Mini Contactor) — Approximate Dimensions in Inches (mm)

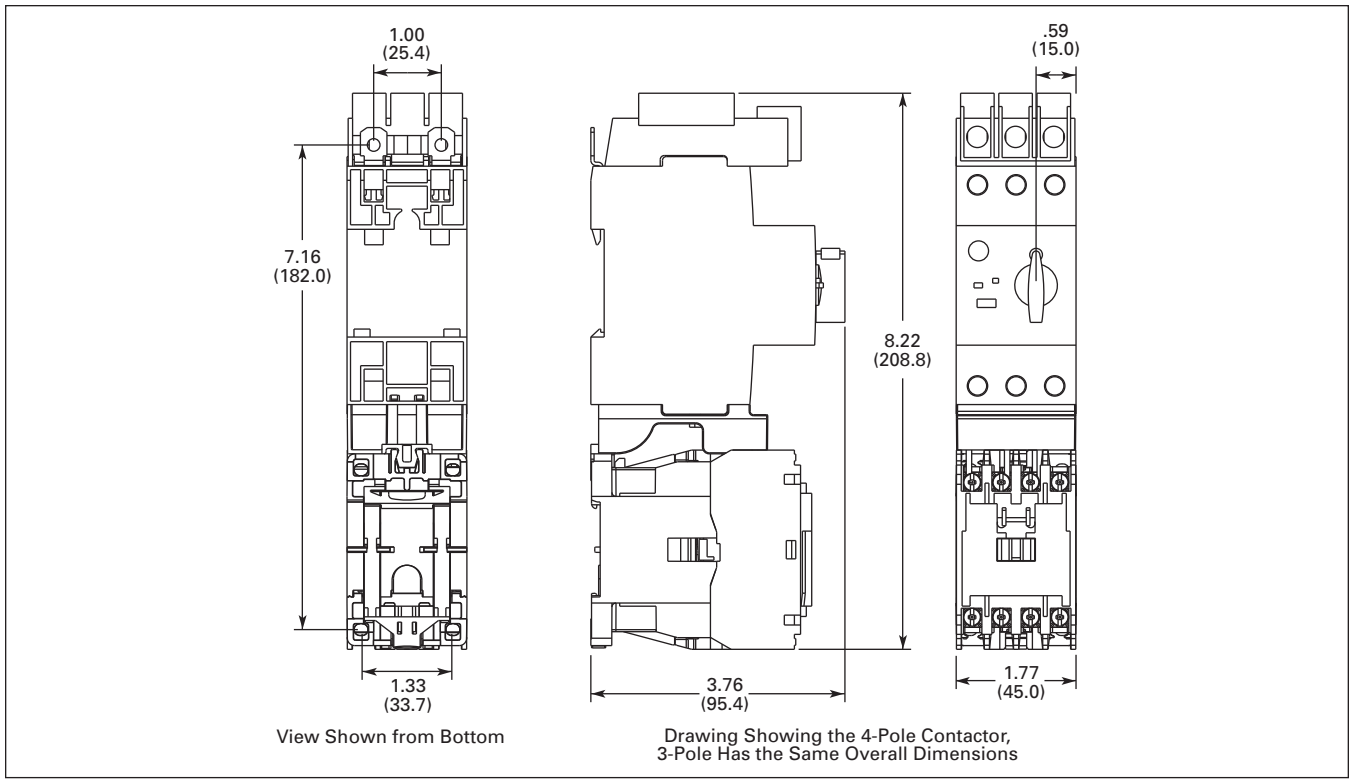

Figure 34-170. Non-reversing Combination Motor Controller AE317 (A307 MMP + C320WC45 WCL + CE15 45 mm Contactor) — Approximate Dimensions in Inches (mm)

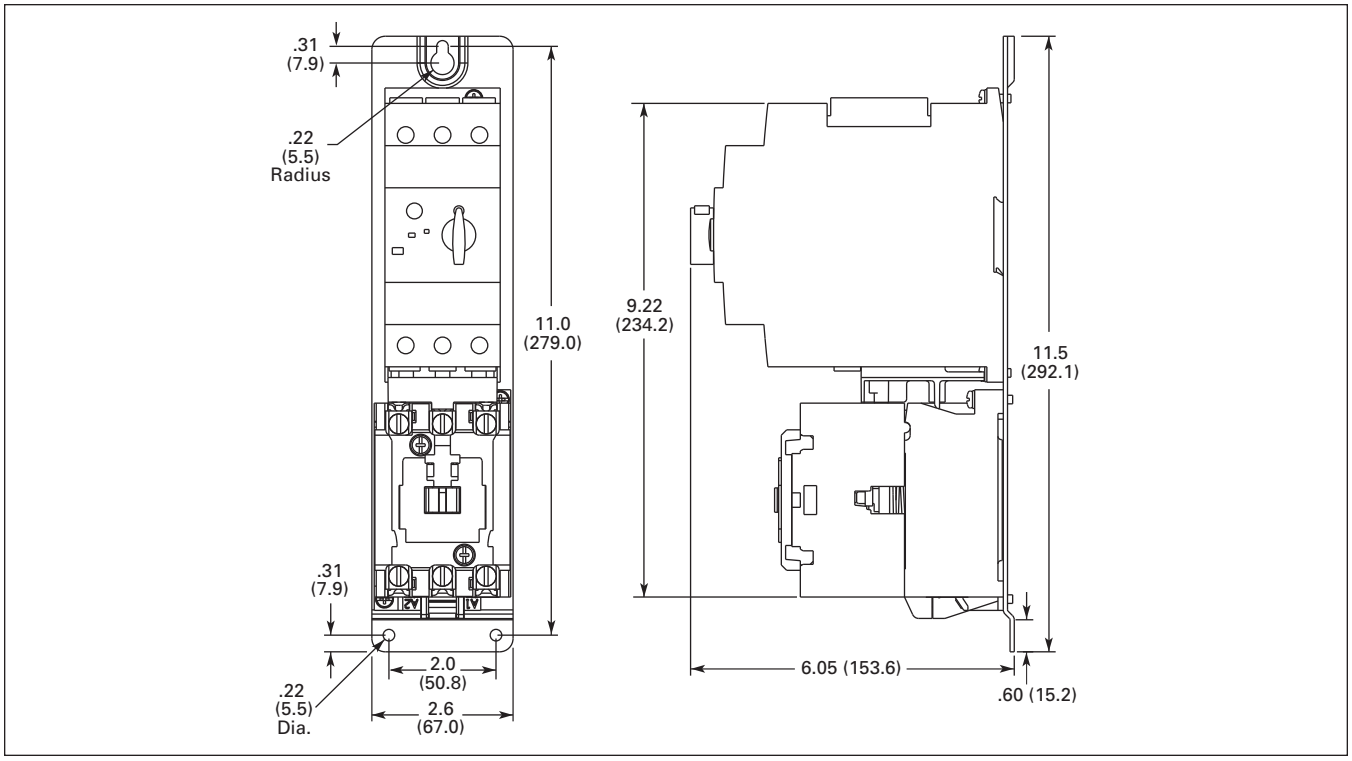

Figure 34-171. Non-reversing Combination Motor Controller AE318 (A308 MMP + C320WC65 WCL + CE15 65 mm Contactor) — Approximate Dimensions in Inches (mm)

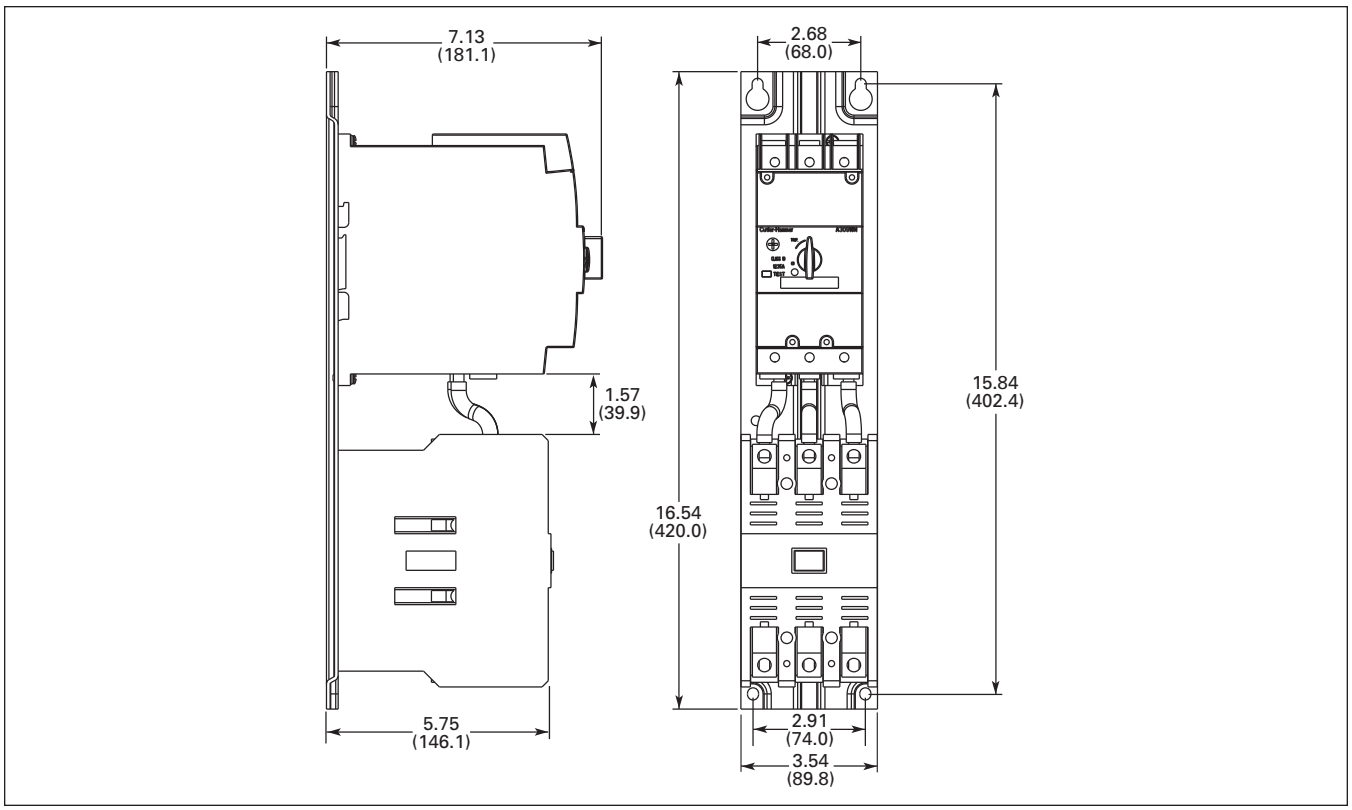

Figure 34-172. Non-reversing Combination Motor Controller AE319 (LSA, A309 MMP + CE15 90 mm Contactor) — Approximate Dimensions in Inches (mm)

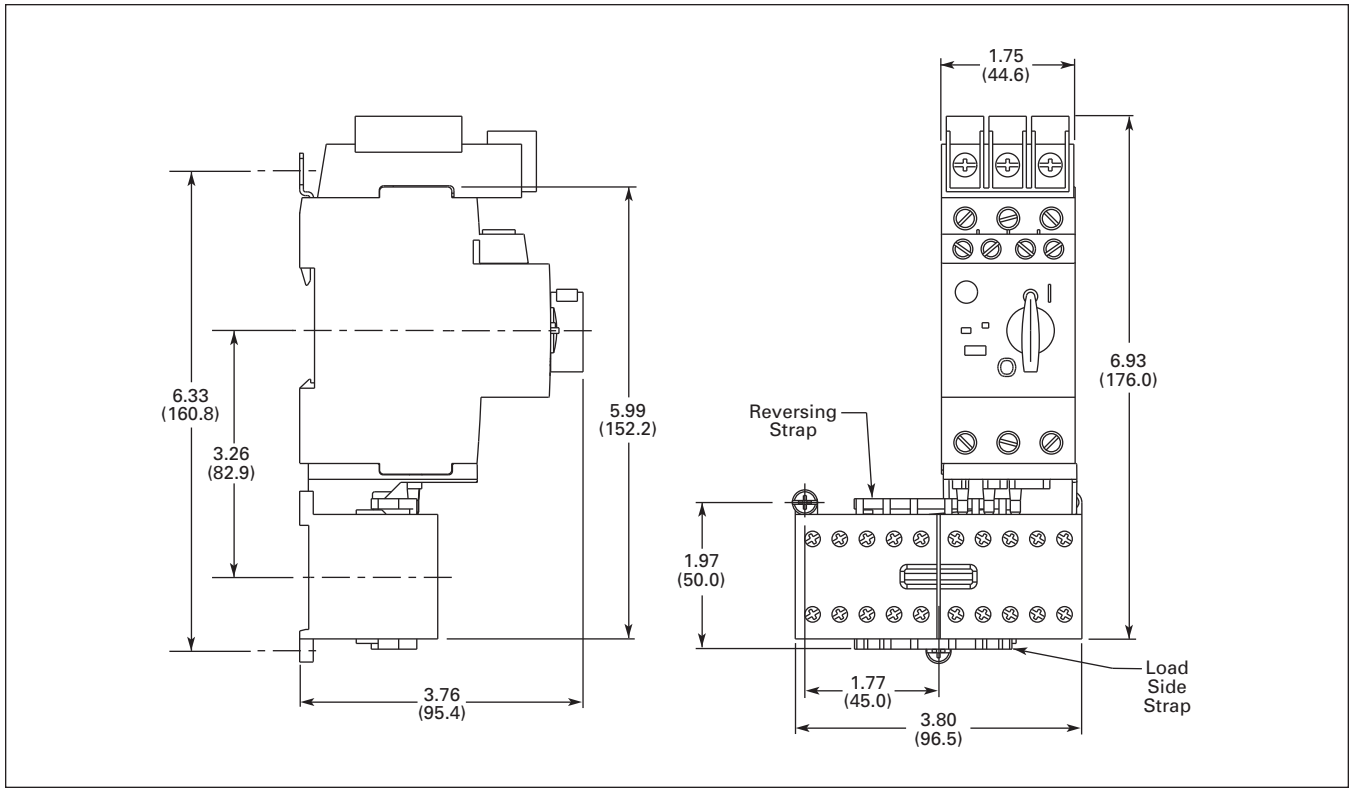

Figure 34-173. Reversing Combination Motor Controller AM357 (A307 MMP + C320WC25 WCL + CE52 Mini Contactor) — Approximate Dimensions in Inches (mm)

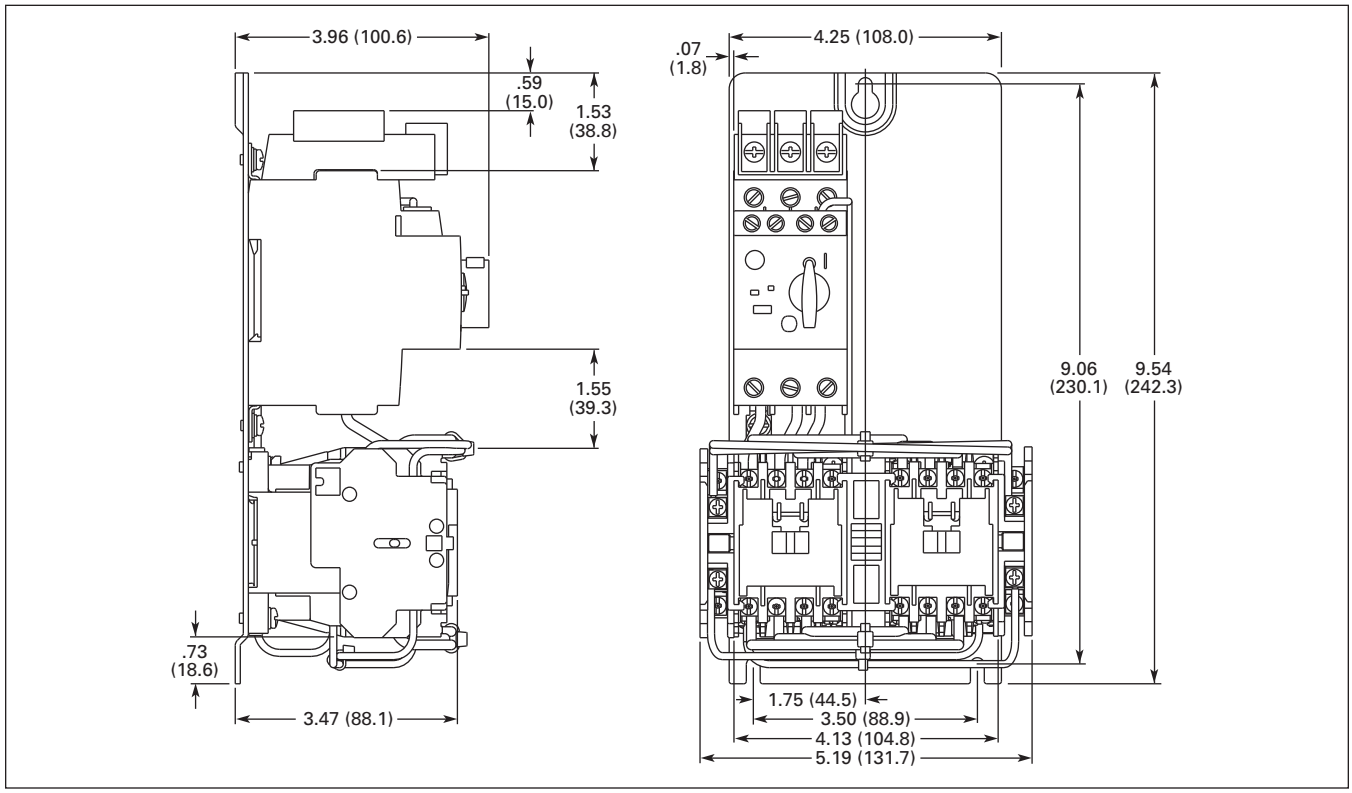

Figure 34-174. Reversing Combination Motor Controller AE357 (A307 MMP + CE55 45 mm Contactor) — Approximate Dimensions in Inches (mm)

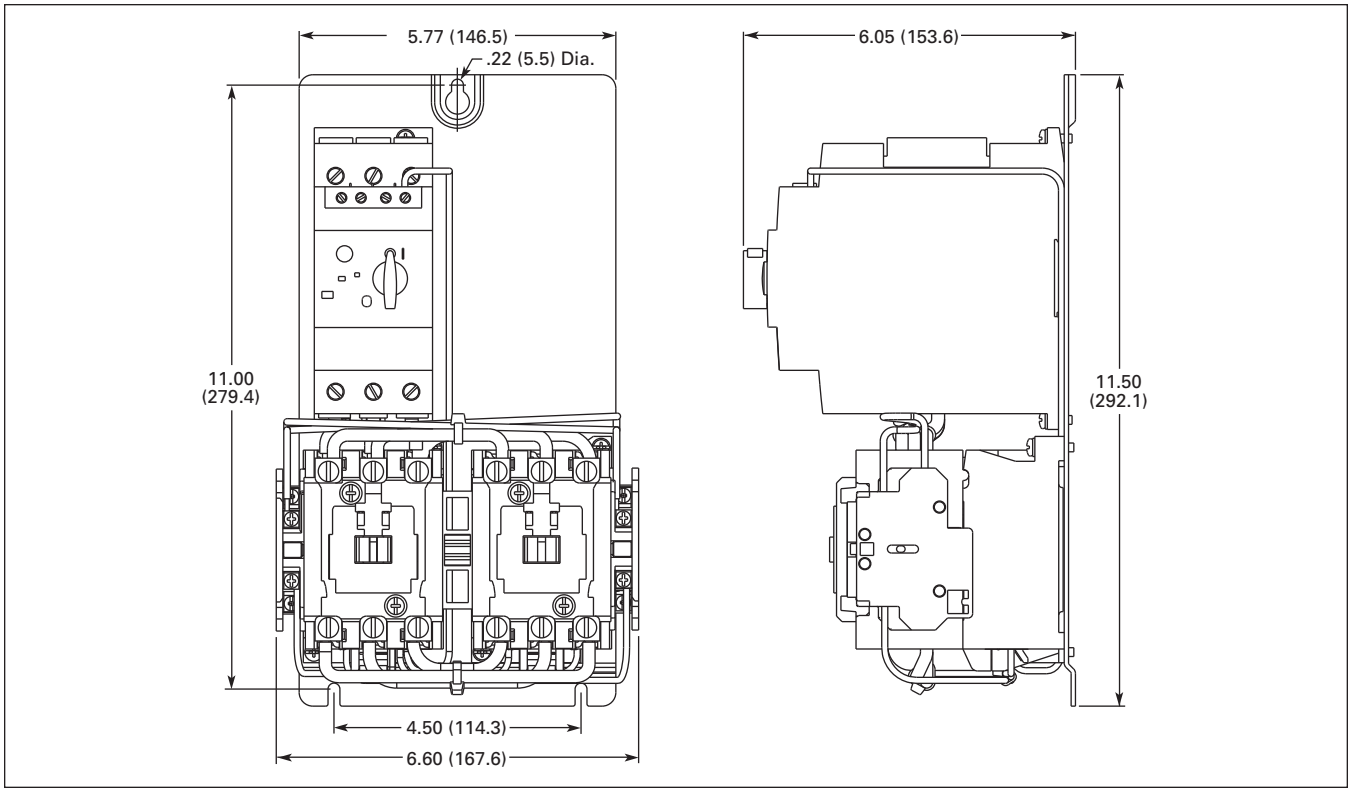

Figure 34-175. Reversing Combination Motor Controller AE358 (A308 MMP + CE55 65 mm Contactor) — Approximate Dimensions in Inches (mm)

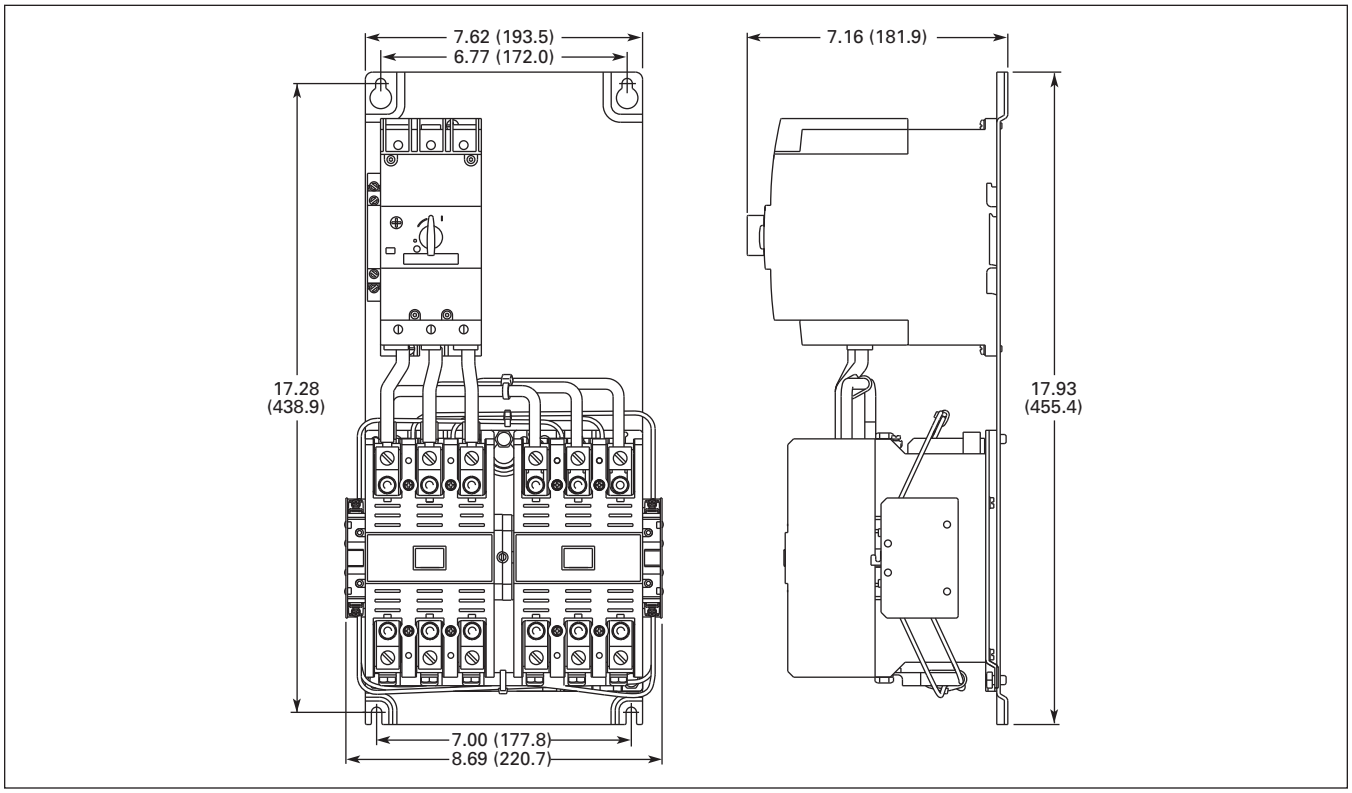

Figure 34-176. Reversing Combination Motor Controller AE359 (LSA, A309 MMP + CE55 90 mm Contactor) — Approximate Dimensions in Inches (mm)

This page intentionally left blank.

Unikeyic Electronics

Global Electronic Components Distributor

Click to view pricing, inventory, delivery, and lifecycle information:

EATON:

NT06104F3435B1H HV1325-2R7156-R PTSLR06036V200 PTSLR12106V200 AMLV08V31C250 ATC-1 HM25030-1SR NT08105F4050B1F 32006-H22 16LET 2822HC70-RTR ANL-250 MLVC08V016C190 MLVC12V033C400 BK/PCD-5-R TV1020-3R0605-R 7505K4 CHSA5930R0010F MLVC12V038C310 MSMA2512R0080FGM MSMA2512R0180FGN NGR20051BN00N PTSLR12066V380 VPH2-0116-R CC06FA1-25A-TR MFSA1206R0300FCM BK/HTB-34M-R DR125-100-R MOVGT20V270K MSMA1206R0300FCM