115.111.129.98KBS..-PP-ASLinear-Kugellager

Linear ball bearings KBS30-PP-AS (Series KBS..-PP-AS)

sealed on all sides, with relubrication facility, adjustable; corrosion-resistant design possible

The datasheet is only an overview of dimensions and basic load ratings of the selected product. Please always observe all the guidelines in these overview pages. Further information is given on many products under the menu item "Description". You can also order comprehensive information via the Catalogue ordering system (https://www.schaeffler.de/content.schaeffler.de/en/news_media/index.jsp) or by telephone on +49 (91 32) 82 - 28 97.

F_w	30	mm	
D	47	mm	
L	68	mm	Tolerance: h12
	6		Number of rows of balls
B_3	1	mm	
B_{L2}	1,85	mm	Slot dimensions suitable for retaining rings to DIN 471.
D_N	44,5	mm	Slot dimensions suitable for retaining rings to DIN 471.
L_2	51,7	mm	Tolerance: H13
N_2	2,5	mm	
X	64	°	
			With initial greasing, sealed on both sides, with relubrication facility.
m	0,3	kg	Mass of bearing
C_{min}	3600	N	The basic load ratings are valid only for hardened (650 HV + 165 HV) and ground shaft raceways.
$C_{0\,min}$	2850	N	The basic load ratings are valid only for hardened (650 HV + 165 HV) and ground shaft raceways.
C_{max}	3800	N	The basic load ratings are valid only for hardened (650 HV + 165 HV) and ground shaft raceways.
$C_{0\,max}$	3600	N	The basic load ratings are valid only for hardened (650 HV + 165 HV) and ground shaft raceways.

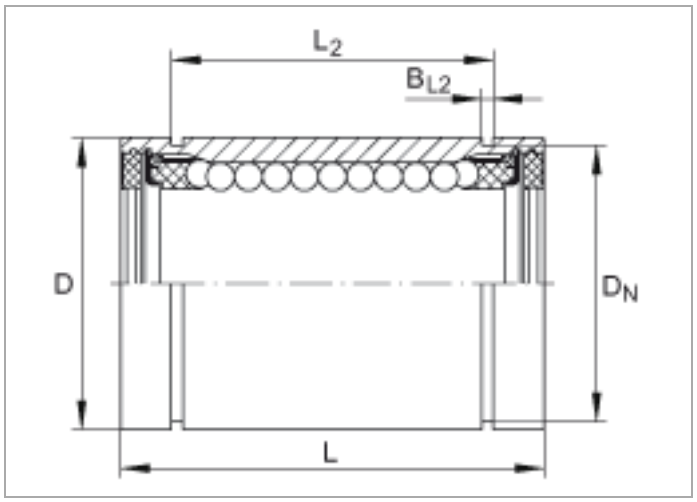
L2
BL2
D
DN
L

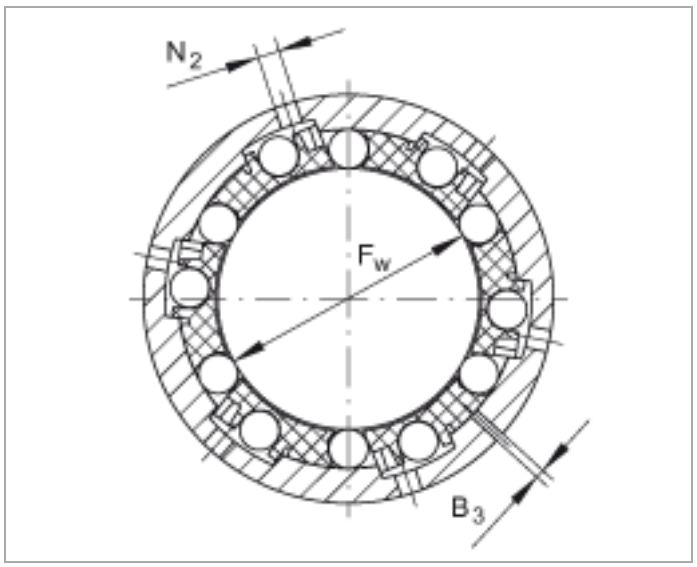
N2
Fw
B3