Drawing without cable connection

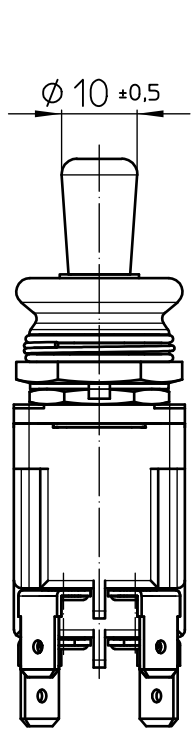

keyway opposite keyway

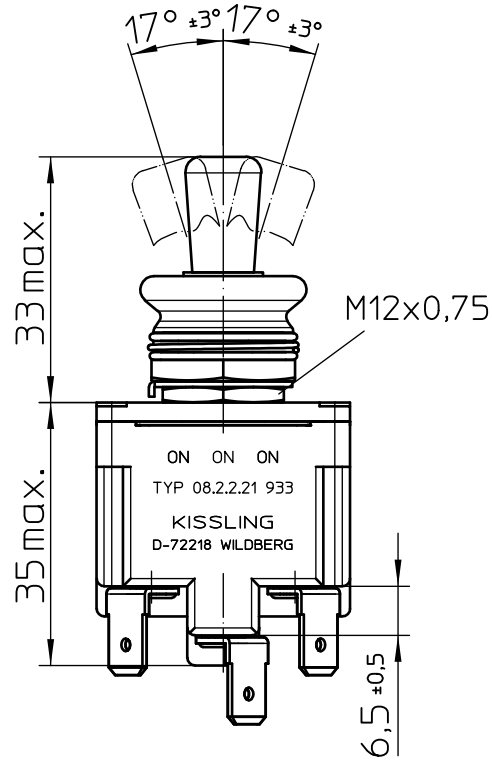

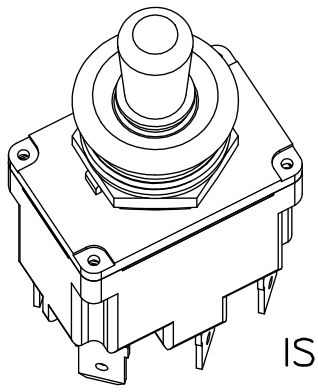

ISO

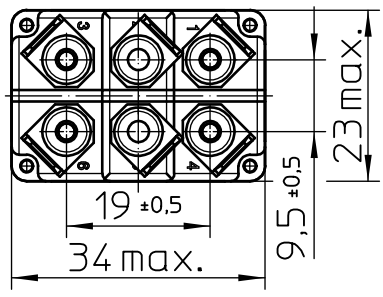

Mounting Detail

with locking ring

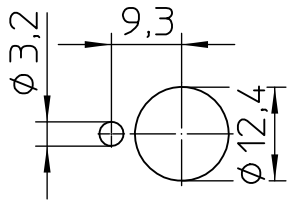

without locking ring

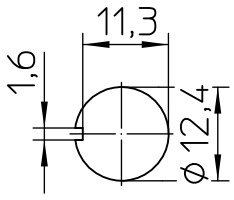

Third Angle Projection

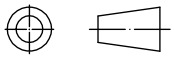

	Date	Name
Drawn	18.08.2005	Braun
Check	14.12.2005	Braun

mm

Scale 1:1

General Tolerances
DIN ISO 2768 mK

KISSLING
Elektrotechnik - GmbH & Co KG
D - 72218 Wildberg

Drawing No:
08-2-2-21 933

NSN.:

Circuit Diagram

	Circuitry made with toggle at		
	keyway	center	opposite keyway
Pole 1	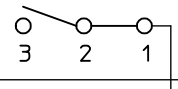	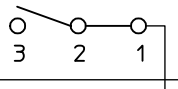	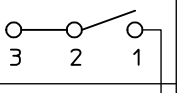
Pole 2	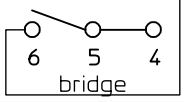	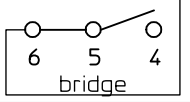	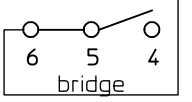

Actuation

locking keyway side
locking center position
locking opposite keyway side

Construction

Material, Casing ..... Duroplast GF
Material, Cover GD-ZnAl4Cu1
Connections ..... Faston DIN 46 244-A6,3-0,8
Protection Interior ..... IP 6K7 DIN 40 050 Part 9
Connections ..... IP 00 DIN 40 050 Part 9

Mechanical Data

Current carrying parts ..... CuZn-Alloy
Contacts ..... Ag
Ambient Temperature Range ..... -35°C to +85°C
Storage Temperature Range ..... -65°C to +85°C
Life Cycle iaw VG 95 210 Part 21, grade H .....100.000 operations

Electrical Data

Voltage
28 V DC ohmic Load 20A
28 V DC inductive Load ..... at L/R = 5 ms 15A
28 V DC lamp Load 7A
115 V AC ohmic Load 15A
115 V AC inductive Load ..... cos. φ = 0,75,15A
115 V AC lamp Load 4A
Motor Load ..... utilisation category AC3 (see DIN VDE 0660 Part 107) 5A

Min. Rating ..... 12 V DC, 20 mA

It is recommended to use gold-plated contacts
for lower currents or voltages.

Unikeyic Electronics

Global Electronic Components Distributor

Click to view pricing, inventory, delivery, and lifecycle information:

TE Connectivity:

1969656-1 2-292161-3 2-520103-2 36161 SMV3W5M6JT SMW73R0JT 1743455-2 2-32562-2 292230-8 352116RFT 35402K7FT 1488167-1 2377783-2 936348-1 CRGCQ2010J3K3 2-520128-2 650075-000 917790-2 1MM-HU-D10-VS-00-F-TBP 281990-2 1-1743284-2 1393431-1 141991-2 3-1393225-0 3430B2F51RTDF 1-794222-0 2834055-1 640174-1 917696-1 CRGCQ0805F150R