Guided Drives DFM

Overview

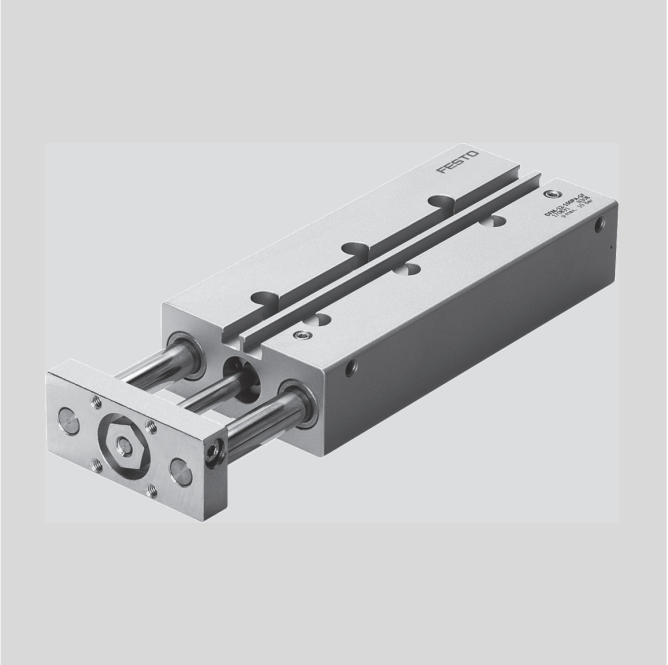

- Sturdy and accurate
- With plain-bearing or recirculating ball bearing guide
- High resistance to torques and lateral forces
- Wide range of applications
- Spare parts service
- Repair service

Detailed product information ➔ www.festo.com/catalog/dfm

Product Range Overview						
Function	Version	Piston ∅ [mm]	Stroke [mm]	Force [N]	Variants	
					P	A
Double-acting	Plain-bearing guide (GF)	12, 16, 20, 25, 32, 40, 50, 63	10 … 200	68 … 1,870	■	■

Variants

P	Flexible cushioning rings/pads at both ends	A	Position sensing

General Technical Data								
Piston ∅	12	16	20	25	32	40	50	63
Pneumatic connection	M5	M5	M5	G1⁄8	G1⁄8	G1⁄8	G1⁄4	G1⁄4
Protection against rotation	Guide rods with yoke, with plain-bearing or recirculating ball bearing guide							

Contents

- Technical Data ➔ 50
- Ordering Data ➔ 51
- Accessories Overview ➔ 52
- Accessories ➔ 53

Note: All metric products can be used within inch tubing systems via hybrid fittings (➔ Overview on page 240)

Guided Drives DFM

Technical Data

FESTO

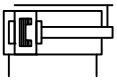

Materials
Housing, end caps:
Anodized aluminum
Yoke plate: Galvanized steel
Piston rod, guide rods:
High-alloy steel
Seals: Nitrile rubber

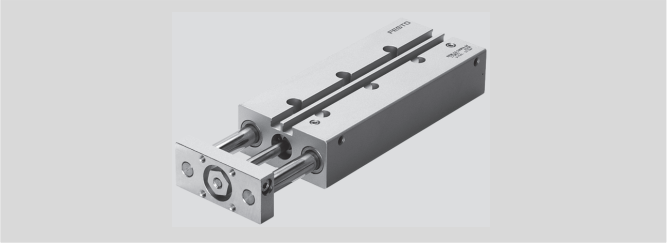

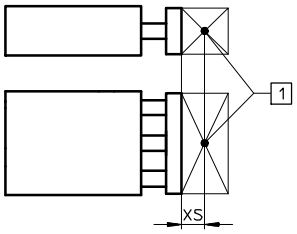

1 Centre of gravity of effective load

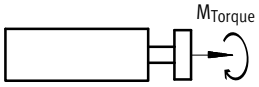

Technical Data					
Piston ∅		12	16	20	25
Cushioning		Flexible cushioning rings/pads at both ends			
Theoretical force at 6 bar, advancing	[N]	68	121	188	295
Theoretical force at 6 bar, retracting	[N]	51	90	141	247
Max. effective load[1)]	[N]	19 … 28	24 … 73	35 … 110	84 … 123
Torque load[2)]	[Nm]	0.38 … 0.65	0.55 … 1.68	1.01 … 3	2.85 … 4.2
Length at min. stroke	[mm]	59	60	75	93
Width	[mm]	60	67	83	95
Height	[mm]	28	32	36	44

Piston ∅		32	40	50	63
Cushioning		Flexible cushioning rings/pads at both ends			
Theoretical force at 6 bar, advancing	[N]	482	754	1,178	1,870
Theoretical force at 6 bar, retracting	[N]	415	686	1,057	1,750
Max. effective load[1)]	[N]	112 … 188	109 … 180	168 … 257	168 … 257
Torque load[2)]	[Nm]	4.25 … 7.3	4.80 … 7.90	9.30 … 14.15	10.50 … 15.90
Length at 0 mm stroke	[mm]	101	106	118	118
Width	[mm]	110	120	148	162
Height	[mm]	49	54	64	78

1) Dependent on stroke and distance xs.
2) Dependent on stroke.

Operating Conditions									
Piston ∅		12	16	20	25	32	40	50	63
Operating medium		Compressed air in accordance with ISO 8573-1:2010 [7:4:4]							
Note on operating/pilot medium		Operation with lubricated medium possible (in which case lubricated operation will always be required)							
Operating pressure	[bar]	2 … 10			1.5 … 10			1 … 10	
Ambient temperature[1)]	[°C]	−20 … +80							

1) Note operating range of proximity sensors.

Ordering Data – Progressive Shock Absorber

Piston ∅ [mm]	Stroke [mm]	Part No.	Type	LT
12	10	**170824**	**DFM-12-10-P-A-GF**	**1D**
	25	**170826**	**DFM-12-25-P-A-GF**	**1D**
	50	**170829**	**DFM-12-50-P-A-GF**	**1D**
	80	**170830**	**DFM-12-80-P-A-GF**	**1D**
	100	**170831**	**DFM-12-100-P-A-GF**	**1D**
16	10	**170832**	**DFM-16-10-P-A-GF**	**1D**
	25	**170834**	**DFM-16-25-P-A-GF**	**1D**
	50	**170837**	**DFM-16-50-P-A-GF**	**1D**
	80	**170838**	**DFM-16-80-P-A-GF**	**1D**
	100	**170839**	**DFM-16-100-P-A-GF**	**1D**
20	25	**170841**	**DFM-20-25-P-A-GF**	**1D**
	50	**170844**	**DFM-20-50-P-A-GF**	**1D**
	80	**170845**	**DFM-20-80-P-A-GF**	**1D**
	100	**170846**	**DFM-20-100-P-A-GF**	**1D**
25	25	**170848**	**DFM-25-25-P-A-GF**	**1D**
	50	**170851**	**DFM-25-50-P-A-GF**	**1D**
	80	**170852**	**DFM-25-80-P-A-GF**	**1D**
	100	**170853**	**DFM-25-100-P-A-GF**	**1D**
32	25	**170855**	**DFM-32-25-P-A-GF**	**1D**
	50	**170858**	**DFM-32-50-P-A-GF**	**1D**
	80	**170859**	**DFM-32-80-P-A-GF**	**1D**
	100	**170860**	**DFM-32-100-P-A-GF**	**1D**
	125	**170861**	**DFM-32-125-P-A-GF**	**1D**
	160	**170862**	**DFM-32-160-P-A-GF**	**1D**
	200	**170863**	**DFM-32-200-P-A-GF**	**1D**
40	25	**170864**	**DFM-40-25-P-A-GF**	**1D**
	50	**170865**	**DFM-40-50-P-A-GF**	**1D**
	80	**170866**	**DFM-40-80-P-A-GF**	**1D**
	100	**170867**	**DFM-40-100-P-A-GF**	**1D**
	125	**170868**	**DFM-40-125-P-A-GF**	**1D**
	160	**170869**	**DFM-40-160-P-A-GF**	**1D**
	200	**170870**	**DFM-40-200-P-A-GF**	**1D**
50	25	**170871**	**DFM-50-25-P-A-GF**	**1D**
	50	**170872**	**DFM-50-50-P-A-GF**	**1D**
	80	**170873**	**DFM-50-80-P-A-GF**	**1D**
	100	**170874**	**DFM-50-100-P-A-GF**	**1D**
	125	**170875**	**DFM-50-125-P-A-GF**	**1D**
	160	**170876**	**DFM-50-160-P-A-GF**	**1D**
	200	**170877**	**DFM-50-200-P-A-GF**	**1D**
63	25	**170878**	**DFM-63-25-P-A-GF**	**1D**
	50	**170879**	**DFM-63-50-P-A-GF**	**1D**
	80	**170880**	**DFM-63-80-P-A-GF**	**1D**
	100	**170881**	**DFM-63-100-P-A-GF**	**1D**
	125	**170882**	**DFM-63-125-P-A-GF**	**1D**
	160	**170883**	**DFM-63-160-P-A-GF**	**1D**
	200	**170884**	**DFM-63-200-P-A-GF**	**1D**

LT = Lead time **1D** typically ships same day/next day **3D** typically ships within 3 days

Peripherals Overview

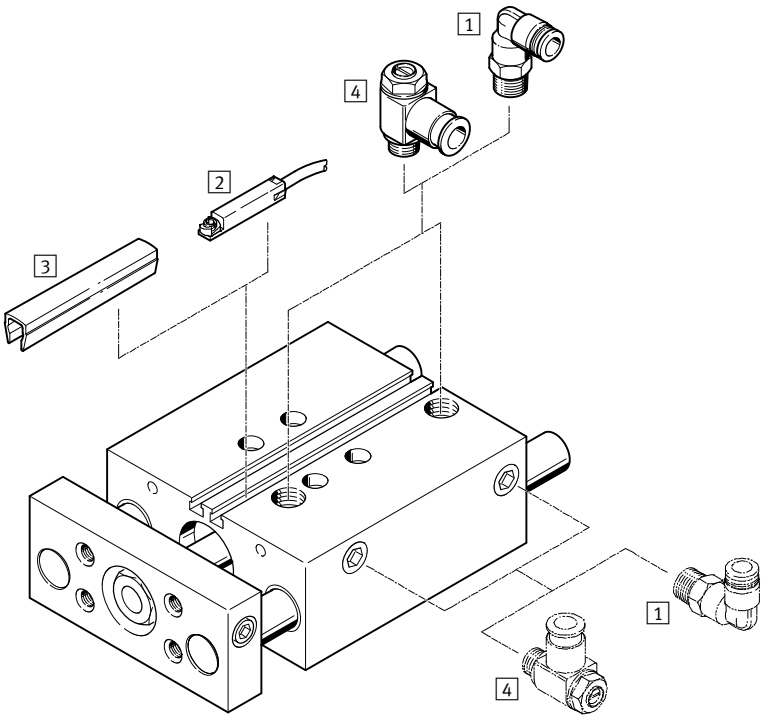

Accessories		➔ Page/Internet
1	Push-in fitting QS	53
2	Proximity sensor SME-/SMT-8	53
3	Slot cover ABP-5-S	abp
4	One-way flow control valve GRLA	53
–	Centering sleeve ZBH	53

Centering Sleeves Included in Scope of Delivery

	For ∅	Centering sleeves[1]	
		For housing	For yoke plate
	12	**2x ZBH-5, 2x ZBH-9**	**2x ZBH-5**
	16	**2x ZBH-5, 2x ZBH-9**	**2x ZBH-5**
	20	**2x ZBH-7, 2x ZBH-9**	**2x ZBH-9**
	25	**2x ZBH-7, 2x ZBH-9**	**2x ZBH-9**
	32	**2x ZBH-9, 2x ZBH-12**	**2x ZBH-9**
	40	**2x ZBH-9, 2x ZBH-12**	**2x ZBH-9**
	50	**2x ZBH-12**	**2x ZBH-12**
	63	**2x ZBH-12**	**2x ZBH-12**

1) Supplied in packs of 10 for repeat orders.

Ordering Data – Centering Sleeves[1]

Technical Data ➔ www.festo.com/catalog/‹type› or ‹order code›

	For ∅	Part No.	Type
	See table above	**189652**	**ZBH-5**
		186717	**ZBH-7**
		150927	**ZBH-9**
		189653	**ZBH-12**

1) Packaging unit quantity 10 pieces.

Ordering Data – One-way Flow Control Valves for Exhaust Air Flow Control

Technical Data ➔ 253

Function	For ∅ [mm]	Tubing O.D. [mm]	Part No.	Type
	12, 16, 20	4	**197577**	**GRLA-M5-QS-4-RS-D**
		6	**197578**	**GRLA-M5-QS-6-RS-D**
	25, 32, 40	4	**197580**	**GRLA-1/8-QS-4-RS-D**
		6	**197581**	**GRLA-1/8-QS-6-RS-D**
	50, 63	6	**162965**	**GRLA-1/4-QS-6-RS-B**
		8	**162966**	**GRLA-1/4-QS-8-RS-B**

Ordering Data – Push-in Fittings QB

Technical Data ➔ 245

Function	For ∅ [mm]	Tubing O.D. [mm]	Part No.	Type
	12, 16, 20	4	**153304**	**QSM-M5-4**
		6	**153306**	**QSM-M5-6**
	25, 32, 40	4	**153001**	**QS-1/8-4**
		6	**153002**	**QS-1/8-6**
	50,63	6	**153003**	**QS-1/4-6**
		8	**153005**	**QS-1/4-8**

Ordering Data – Proximity Sensors and Connecting Cables

	Description	Part No.	Type
Proximity sensor for T-slot, magneto-resistive – N/O contact Technical data ➔ 169			
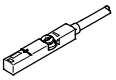	PNP, cable, 2.5 m	**574335**	**SMT-8M-A-PS-24V-E-2,5-OE**
	PNP, plug	**574334**	**SMT-8M-A-PS-24V-E-0,3-M8D**
	NPN, cable, 2.5 m	**574338**	**SMT-8M-A-NS-24V-E-2,5-OE**
	NPN, plug	**574339**	**SMT-8M-A-NS-24V-E-0,3-M8D**
Magnetic reed – N/O contact			Technical data ➔ 170
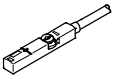	Cable, 2.5 m	**543862**	**SME-8M-ZS-24V-K-2,5-OE**
	Plug	**543861**	**SME-8M-DS-24V-K-0,3-M8D**
Connecting cable, straight socket			
	2.5 m	**541333**	**NEBU-M8G3-K-2.5-LE3**

Lead Time LT for all products on this page: **1D** typically ships same day/next day

Unikeyic Electronics

Global Electronic Components Distributor

Click to view pricing, inventory, delivery, and lifecycle information:

FESTO:

QSY-6H-4 SASC-P4-A-M8-A NPQP-T-Q8-E-FD-P10 CRVZS-0.4 HGL-1/8-QS-6 NPQP-D-Q4-S8-FD-P10 NPQP-LQ-R18-Q8-FD-P10 153031 NPQH-T-Q14-E-P10 NPQP-L-Q10-E-FD-P10 NPQP-Y-R12-Q12-FD QSF-1/4-8-B 153151 QSLL-G1/2-12 153269 153367 QS-1/2-16 QSS-8-F SGS-M10X1,25 153307 DSBC-80-20-D3-PPSA-N3 NPQP-LQ-R18-Q4-FD-P10 QSML-6 VABM-B10-25S-G38-6-P3 NPQP-Y-Q6-E-FD-P10 QS-1/8-8-I VABM-B10-25S-G38-10 VBQF-U-G14-E QS-10H-6 QSF-3/8-8-B