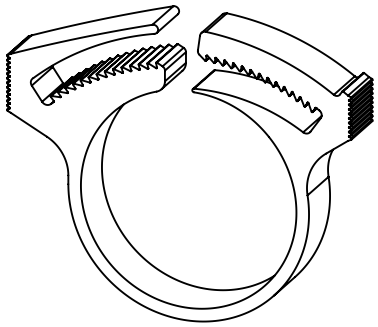

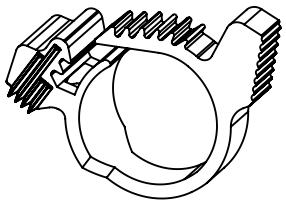

SHC-16GF*

PART NO.	HOLDING DIAMERER RANGE	THICKNESS "T"	WIDTH "W"
SHC-16GF*	1/4 - 5/16 [6.4-7.9]	.040 [1]	.13 [3.3]
SHC-23	23/64 - 25/64 [9.1-9.9]	.07 [1.8]	.22 [5.6]
SHC-26	25/64 - 15/32 [9.9-11.9]		
SHC-30	15/32 - 17/32 [11.9-13.5]		
SHC-32	17/32 - 19/32 [13.5-15.1]		
SHC-38	19/32 - 21/32 [15.1-16.7]		
SHC-44	11/16 - 13/16 [17.5-20.6]		
SHC-50	3/4 - 7/8 [19.1-22.2]		
SHC-56	7/8 - 1 [22.2-25.4]		
SHC-62	61/64 - 1 3/32 [24.2-27.8]		.31 [7.9]
SHC-68	1 1/32 - 1 3/16 [26.2-30.2]		
SHC-80	1 1/4 - 1 7/16 [31.8-36.5]		
SHC-92	1 13/32 - 1 5/8 [35.7-41.3]		.36 [9.1]
SHC-134	2 1/8 - 2 3/8 [54-60.3]		.40 [10.2]

* ONLY AVAILABLE IN GLASS FILLED NYLON MATERIAL.

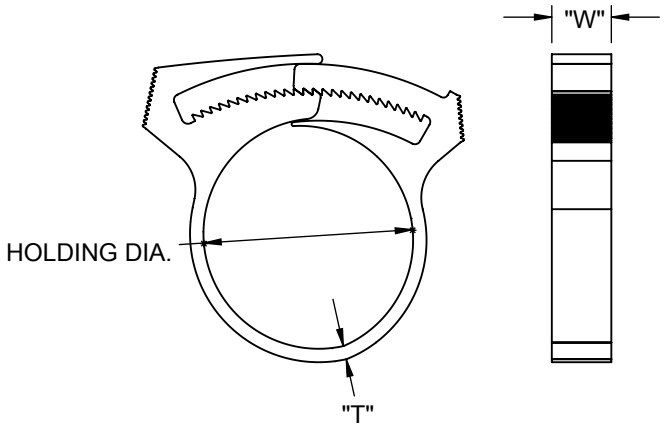

NOTES:
1. MATERIAL: NYLON 6/6 UL94 HB (RMS-73).
   GLASS FILLED NYLON (RMS-35), AVAILABLE BY SPECIAL ORDER.
2. COLOR: WHITE
   BLACK AVAILABLE BY SPECIAL ORDER.

REV.	DESCRIPTION	ENGR.	DATE
H	CORRECTED UL 94 RATING TO HB, SEE ECN # 1370	DZ	07/31/2012
G	SEE CO 200718 FOR CHANGES	SK	10/03/2011
F	SEE CO 200714 FOR CHANGES	SK	09/27/2011
E	SEE CO 200707 FOR CHANGES	SK	09/12/2011
-	SEE ENG FOR REV A TO D	--	------

TITLE: SNAP-IT HOSE CLAMPS

UNITS: IN [mm]

CREATED USING SOLIDWORKS

TOLERANCES UNLESS NOTED
.XX=±.010
.XXX=±.005
FRAC.=±1/64
ANG.=±1°

FILE #: SHC | DWN: SK | APP: SK

SHEET: 1 OF 1 | SHEET SIZE: A | DT: 09/09/11 | CHKD: MJB

RE: RICHCO, INC.
--

RICHCO, INC.
WWW.RICHCO-INC.COM

FINAL

PART # SEE TABLE

PRINT TYPE CA

Unikeyic Electronics

Global Electronic Components Distributor

Click to view pricing, inventory, delivery, and lifecycle information:

ESSENTRA:

23EZAB450TAB 301418040050 DLCBS-10-01 DLMSPM-2-01 NSP-8-5-01 QFG-16205 TCBS-4-01 AKKL-3140A-19 GR3146A HG-16 HS4-8 SR-6080B HR6P-3/8 LCBS-12-01 MFTH-2-01A-RT-M 248532 GRO025062A LWS-SE2-2-01 SLPB1LB-SLG1LB TCEHCBS-6-01 HG-2.5 MDLSP1-05M-01 NM-20-R20 SRS4-3-01 HG-18 HS-6-8 MDLSP1-08M-01 MSPS-7-01 AKKL-2140-A-RT MTH1-2