ROHS Compliant

MAPX	MODIFICATION	DATE	DRAW	APPROVE

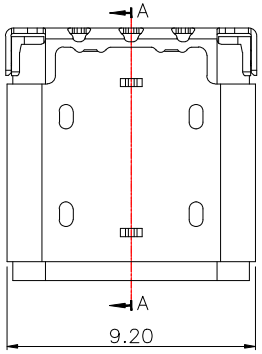

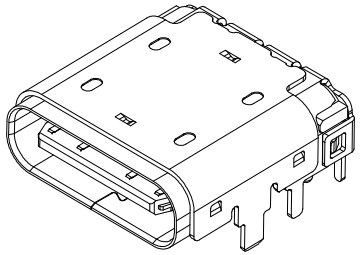

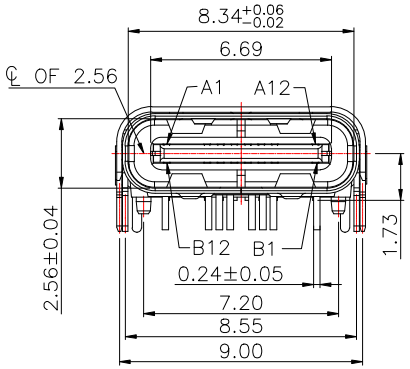

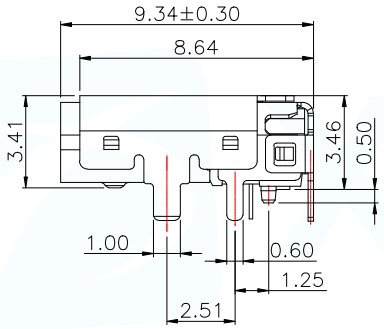

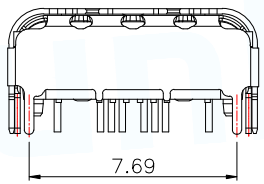

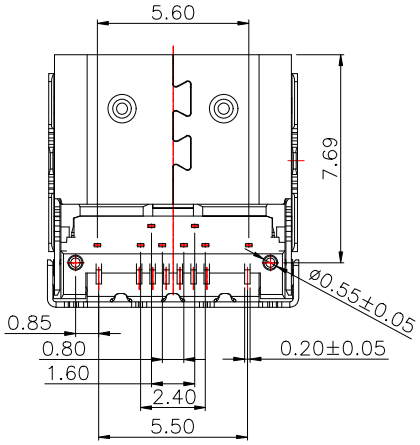

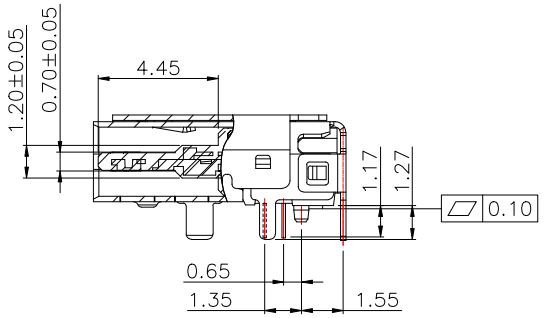

SECTION:A–A

NOTE:

1.MATERIAL SPECIFICATION:
  1.HOUSING:PA9T COLOR SEE TABLE 1,UL94 V–0.
  2.CONTACTS:COPPER ALLOY(C1814)
  3.MID PLATE: STAINLESS STEEL(SUS301)
  4.FRONT SHELL&COVER: STAINLESS STEEL(SUS304)
2.PLATING SPECIFICATION:
  2–1.CONTACTS:
    Ni 50u" MIN. UNDER PLATED OVER ALL.
    Au PLATED ON THE FUNCTIONAL AREA OF CONTACT.
    (GOLD PLATING THICKNESS FOLLOW THE P/N)
    PLATING SPECIFICATIONS OF THE SOLDER AREA FOLLOW THE P/N
  2–2.FRONT SHELL & COVER:
    Ni 30u" MIN. UNDER PLATED OVER ALL.
  2–3.MID PLATE
    CLEAR ONLY
3.MECHANICAL PERFORMANCE,
  3–1.INSERTION FORCE: 0.5~2.0kgf.
  3–2.REMOVAL FORCE: 0.8kgf~2.0kgf.
  3–3.DURABILITY: 10000 CYCLES.
4.ELECTRICAL PERFORMANCE,
  4–1. CURRENT RATING:3.0A
    VOLTAGE RATING:5.0V
  4–2. LLCR:
    VBUS & GND PINS AND OTHER PINS: 40mΩ/PIN MAX.
    SHIELD: 50mΩ/MAX.
    LLCR MAX. CHANGE OF ALL PINS: 10mΩ.
  4–3.INSULATION RESISTANCE: 100MΩ MIN
  4–4.DIELECTRIC WITHSTAND VOLTAGE,AC 100V FOR 1 MINUTE.
5. ENVIRONMENTAL PERFORMANCE:
  OPERATING TEMPERATURE: −25°C~+85°C.
6.IR REFLOW:
  THE PEAK TEMPERATURE ON THE BOARD SHALL
  BE MAINTAINED FOR 10 SECONDS AT 260°C.

MANUFACTURE DWG	东莞市讯普电子科技有限公司 DongGuan XunPu Electronics Co,Ltd		
UNLESS OTHERWISE SPECIFED TOLERANCES		TITLE: USB CF 16PIN DIP&SMT	
		PAR	TYPEC–319DDS–ACP16
DECIMALS: / ANGLES:		DWN	
.X:±0.30 / X°.:±10°		CHKD	
.XX:±0.20 / .X°:±8°		APVD	
.XXX:±0.10 / .XX°:±5°	CUSTOMER COPY	SCALE1:1 / UNIT:MM	
		SIZE:A4 / SHEET:1F1	REV:A

ROHS Compliant

MAPX	MODIFICATION	DATE	DRAW	APPROVE

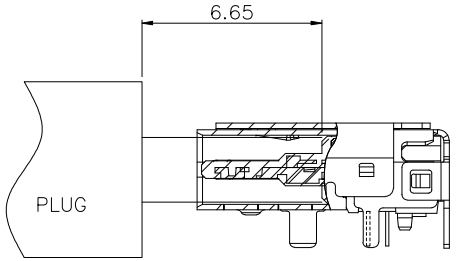

AFTER MATING

USB TYPE-C PIN ASSIGNMENTS

PIN NUMBER	SIGNAL NAME	PIN NUMBER	SIGNAL NAME
A1	GND	B12	GND
A4	VBUS	B9	VBUS
A5	CC1	B8	SBU2
A6	Dp1	B7	Dn2
A7	Dn1	B6	Dp2
A8	SBU1	B5	CC2
A9	VBUS	B4	VBUS
A12	GND	B1	GND

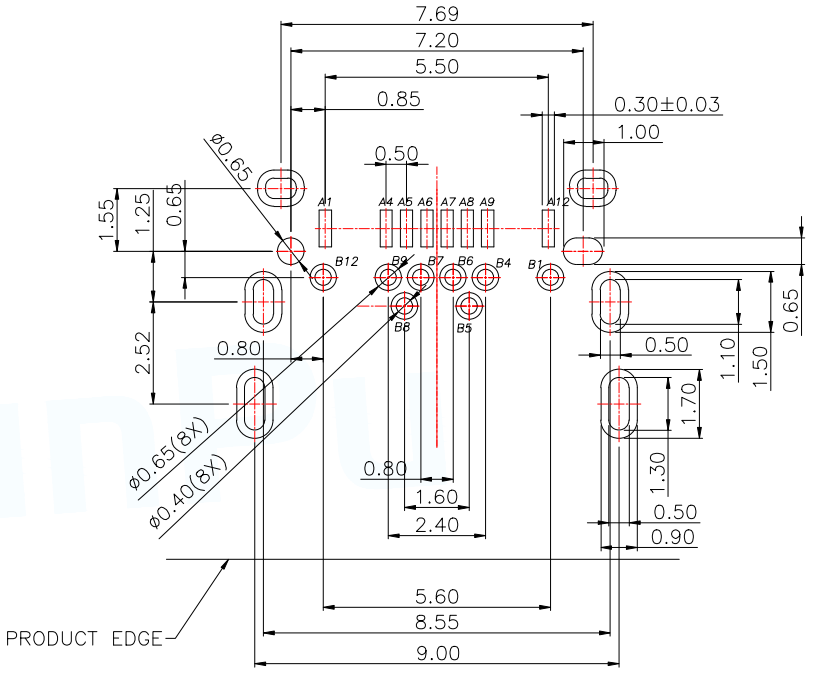

SCALE 1.5:1

RECOMMENDED PCB LAYOUT(TOP VIEW)

THICKNESS 1.0 MM;DEFAULT TOLERANCE:±0.05

TABLE 1

ITEM	P/N	PLATING		HOUSING
		MATING AREA	SOLDER AREA	CLOER
1	TYPEC-319DDS-ACP16	Au:3u"	Au:G/F	BALCK

MANUFACTURE DWG	东莞市讯普电子科技有限公司 DongGuan XunPu Electronics Co,Ltd		
UNLESS OTHERWISE SPECIFED TOLERANCES		TITLE: USB CF 16PIN DIP&SMT	
		PAR	TYPEC-319DDS-ACP16
DECIMALS: / ANGLES:		DWN	
.X:±0.30 / X°.:±10°		CHKD	
.XX:±0.20 / .X°:±8°		APVD	
.XXX:±0.10 / .XX°:±5°	CUSTOMER COPY	SCALE1:1 / UNIT:MM	
		SIZE:A4 / SHEET:1F1	REV:A

ROHS Compliant

MAPX	MODIFICATION	DATE	DRAW	APPROVE

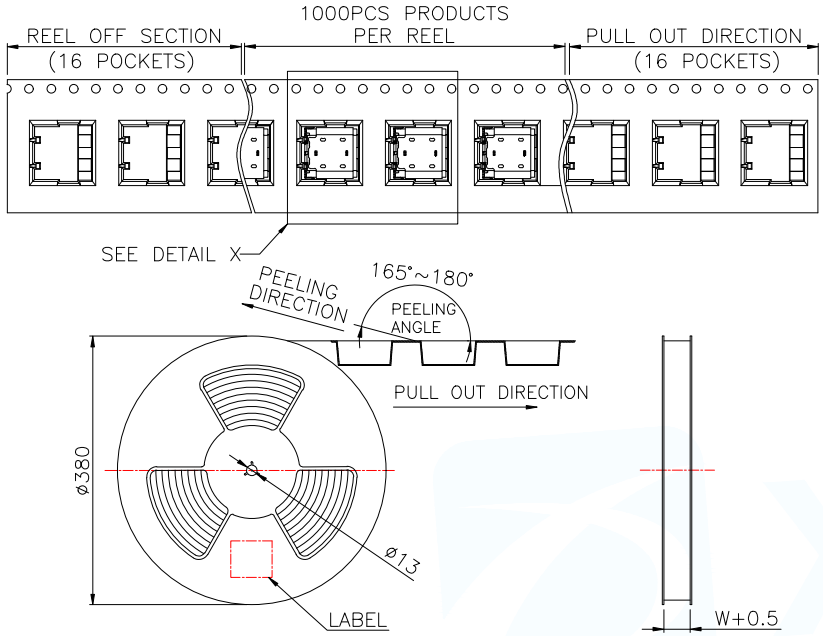

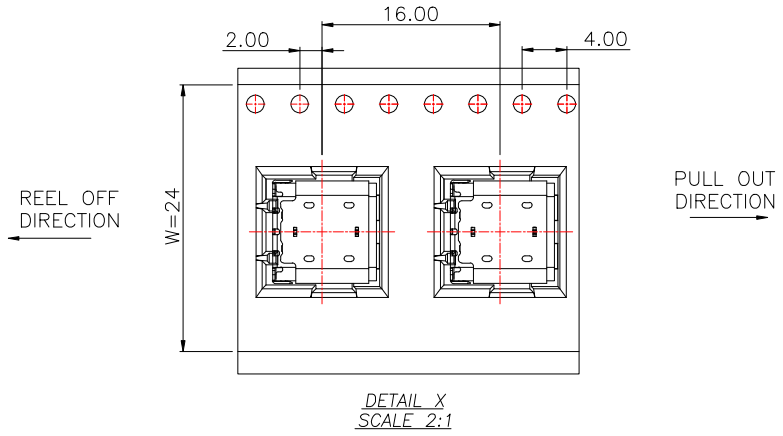

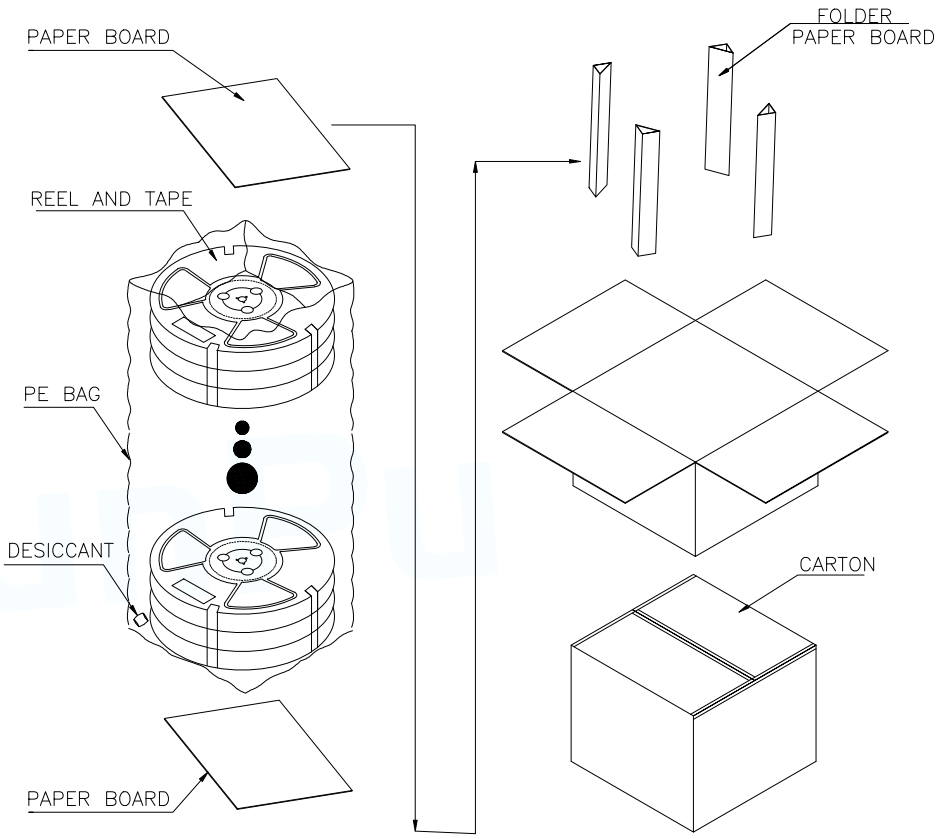

	REEL/TRAY	CARTON
CONNECTOR (PCS)	1000	10000

MANUFACTURE DWG	东莞市讯普电子科技有限公司 DongGuan XunPu Electronics Co,Ltd
UNLESS OTHERWISE SPECIFED TOLERANCES	TITLE: USB CF 16PIN DIP&SMT
DECIMALS: / ANGLES:	PAR: TYPEC-319DDS-ACP16
.X:±0.30 / X°.:±10°	DWN:
.XX:±0.20 / .X°:±8°	CHKD:
.XXX:±0.10 / .XX°:±5°	APVD:
CUSTOMER COPY	SCALE1:1 / UNIT:MM / SIZE:A4 / SHEET:1F1 / REV:A

Unikeyic Electronics

Global Electronic Components Distributor

Click to view pricing, inventory, delivery, and lifecycle information:

XUNPU:

HDMI-212L PHB2.0-02-20PZZ SMA-KWE-323C-H13X23-LW WAFER-PH2.0-3PWB
FPC-0.5FX-16PWCR-H20 FPC-0.5FX-20PWBH15 FPC-0.5FX-4PWBH15 FPC-1.0HF-4PWAR-H20
WAFER-GH1.25-6PLB WAFER-MX1.25B-8PWB WAFER-PH2.0-11PZZ WAFER-PH2.0-8PLB
FPC-1.0AX-14PWCR-H25 MU-103-ARW64 WAFER-WBM4.2-16PJK-GB WAFER-XH2.54-4PWZ-H62
FPC-0.5AL-6PB FPC-0.5AX-24PWCR-H20 FPC-0.5HF-10PWBR-H20 RJ45-005-014-11
WAFER-PH2.0-6PWB FPC-0.5AX-30PWCR-H20 TYPEC-304YDSW-ACP16 DC-031A-A100
FPC-0.5FX-4PWCR-H20 WAFER-PH2.0-2PJK WAFER-VH3.96-4PLB FPC-0.5AS-5PWCR-H20
FPC-0.5FX-14PWCR-H20 FPC-1.0AX-4PWCR-H25