EC No.

Toggle Switches

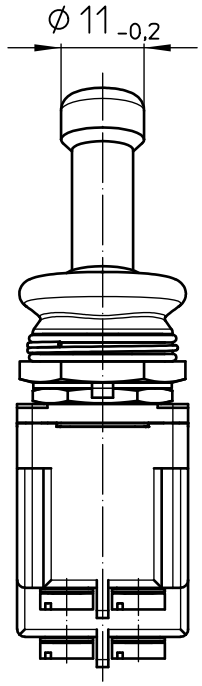

keyway opposite keyway

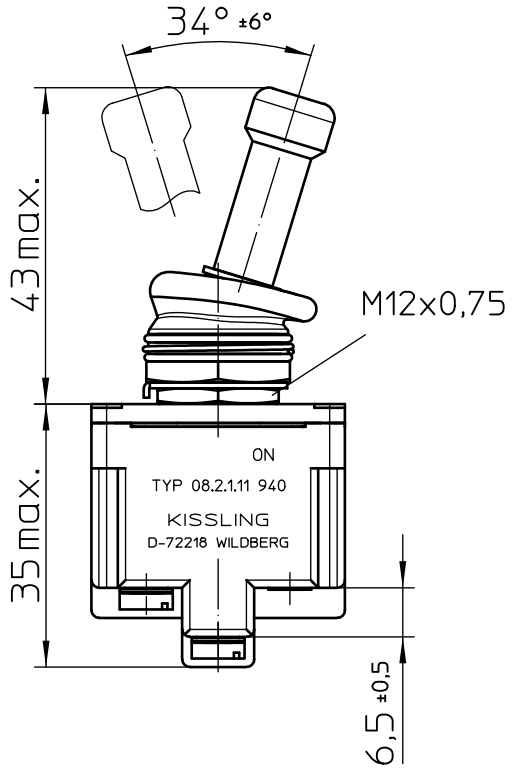

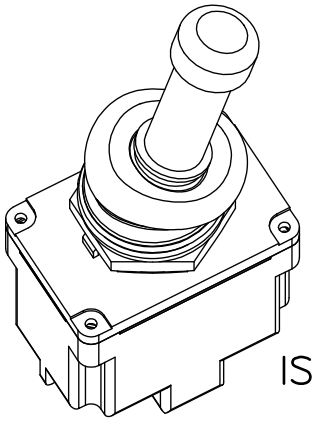

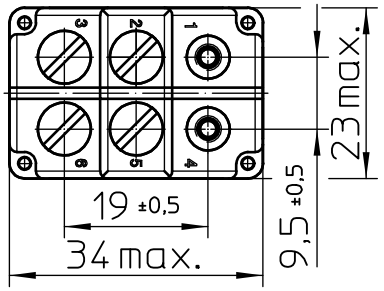

Mounting Detail

with locking ring

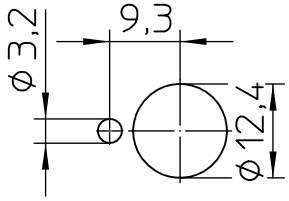

without locking ring

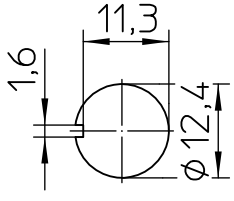

Third Angle Projection

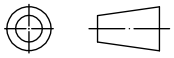

	Date	Name
Drawn	15.08.2005	Braun
Check	05.12.2005	Braun

mm

Scale 1:1

General Tolerances
DIN ISO 2768 mK

Elektrotechnik - GmbH & Co KG
D - 72218 Wildberg

Drawing No:
08-2-1-11 940

NSN.:

Circuit Diagram

	Circuitry made with toggle at keyway	Circuitry made with toggle at opposite keyway
Pole 1	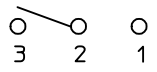	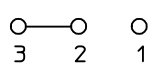
Pole 2	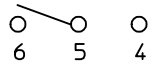	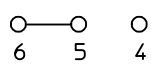

Actuation

momentary keyway side
locking opposite keyway side

Construction

Material, Casing ..... Duroplast GF
Material, Cover GD-ZnAl4Cu1
Connections ..... Screws M3,5x6 ISO 1580
Protection Interior ..... IP 6K7 DIN 40 050 Part 9
Connections ..... IP 00 DIN 40 050 Part 9

Mechanical Data

Current carrying parts ..... CuZn-Alloy
Contacts ..... Ag
Ambient Temperature Range ..... -35°C to +85°C
Storage Temperature Range ..... -65°C to +85°C
Life Cycle iaw VG 95 210 Part 21, grade H .....100.000 operations

Electrical Data

Voltage
28 V DC ohmic Load 18A
28 V DC inductive Load ..... at L/R = 5 ms 10A
28 V DC lamp Load 5A
115 V AC ohmic Load 11A
115 V AC inductive Load ..... cos. φ = 0,75, 8A
115 V AC lamp Load 2A
Motor Load ..... utilisation category AC3 (see DIN VDE 0660 Part 107) 5A

Min. Rating ..... 12 V DC, 20 mA

It is recommended to use gold-plated contacts
for lower currents or voltages.