4mm × 6mm Nylon 6 Snap Rivet

DURATOOL

RoHS Compliant



Specifications:

Type : Snap Rivet TRSR
Material : Nylon 6/6 V2 / TMS 052
Colour : Black / White

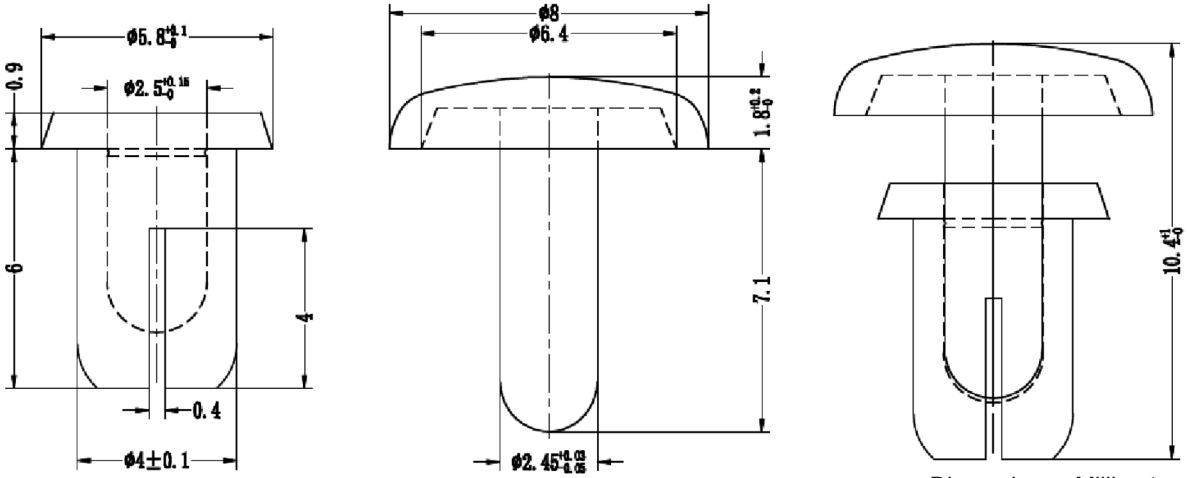

Dimensions : Millimetres

Part Number Table

Description	Part Number
Rivet, Nylon 6, 4mm, 6mm, Black, PK100	DTRSR4060B
Rivet, Nylon 6, 4mm, 6mm, White, PK100	DTRSR4060W

Important Notice : This data sheet and its contents (the "Information") belong to the members of the Premier Farnell group of companies (the "Group") or are licensed to it. No licence is granted for the use of it other than for information purposes in connection with the products to which it relates. No licence of any intellectual property rights is granted. The Information is subject to change without notice and replaces all data sheets previously supplied. The Information supplied is believed to be accurate but the Group assumes no responsibility for its accuracy or completeness, any error in or omission from it or for any use made of it. Users of this data sheet should check for themselves the Information and the suitability of the products for their purpose and not make any assumptions based on information included or omitted. Liability for loss or damage resulting from any reliance on the Information or use of it (including liability resulting from negligence or where the Group was aware of the possibility of such loss or damage arising) is excluded. This will not operate to limit or restrict the Group's liability for death or personal injury resulting from its negligence. DURATOOL is the registered trademark of the Group. © Premier Farnell plc 2012.

Unikeyic Electronics

Global Electronic Components Distributor

Click to view pricing, inventory, delivery, and lifecycle information:

TR Fastenings:

3.58PRST30TC1D M420 CSSTMCZ100- N40.250 KRSTABZ100- TR00009624-000 M4 10 KRSTTT TC1D - M420 HHA2SCS100- M516 SOA2CSS50- M616 HHA2SCS100- 3.06PRST30TC1D M48 KSSTMCZ100- M512 SOA2CSS50- M612 HHA2SCS100- M630 KHA2MCS50- TR00015923-000 M320 SOA2CSS50- M425 PRA2MCS100- M312 PRSTMCB100- TR NNE 34814 M3 M2.520 CSSTMCZ100- M3.525 ISBRMCN100- M510 KSSTMCZ100- M512 PRSTMCB100- M610 HHA2SCS100- M640 SOA2CSS50- M825 HHA2SCS50- M46 CSSTMCZ100- 3.516PRST30TC1D M2.512 KSSTMCZ100- M46 KSSTMCZ100- M520 KHA2MCS50-