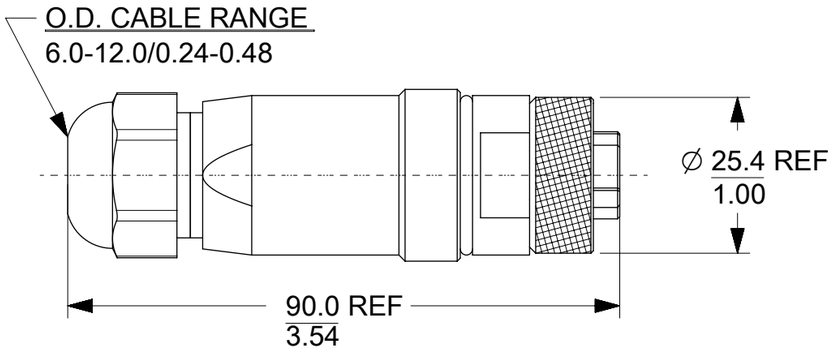

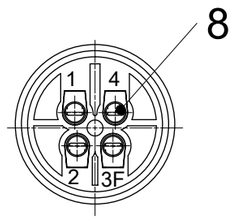

BACK SIDE
INSERT ONLY

A1

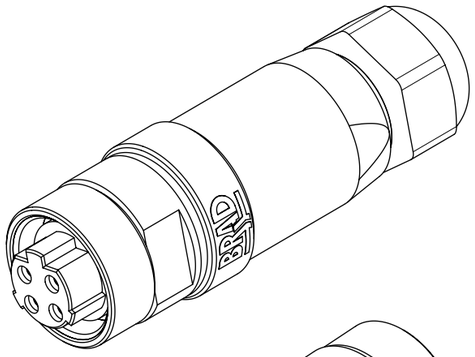

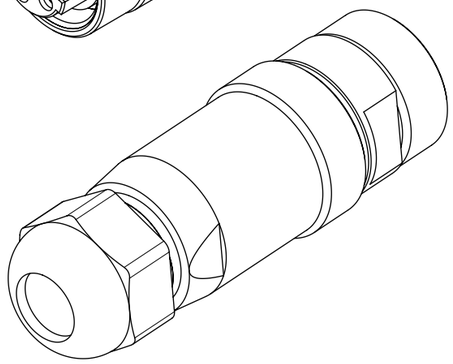

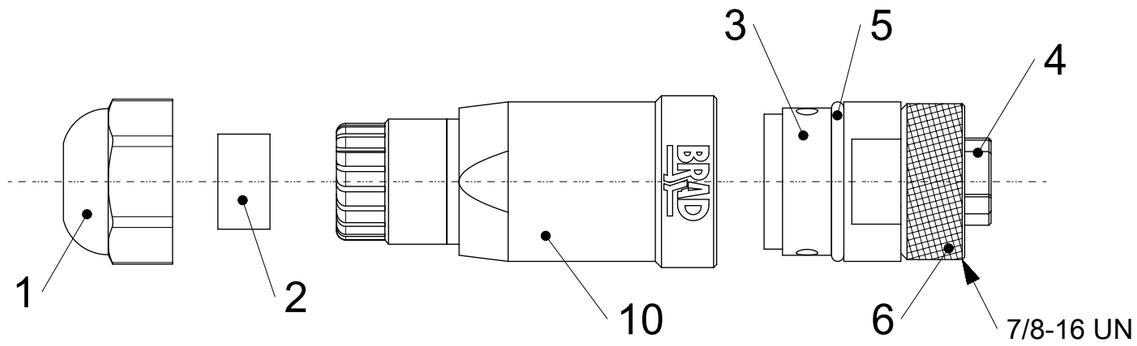

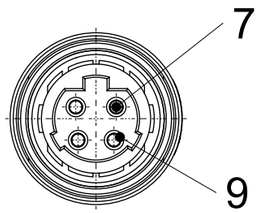

FEMALE FACE VIEW

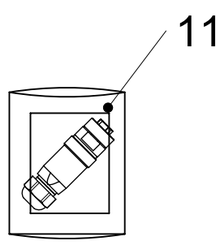

NOTES:

1. ELECTRICAL SPECIFICATION
   VOLTAGE RATING: 600VAC
   AMPERAGE RATING: max.15 AMPS
   PROTECTION: IP67
   OPERATING TEMPERATURE: -20°C TO +80°C
   FINAL OPERATING TEMPERATURE NEEDS TO BE CONFIRMED

2. UL CERTIFICATION: UL LISTED AND CULUS LISTED.
   FILE NUMBER E258922

3. ENGINEERING NUMBER: 1A4100-34PWR

WIRING CHART

1	
2	
3	
4	

ITEM	QTY	COMPONENT	MATERIAL	FINISH
1	1	HUT NUT PG 13.5	PA, BLACK	-
2	1	GASKET MO	NITRILE, BLACK	-
3	1	INSERT FE REAR	PA, BLACK	-
4	1	INSERT FE FRONT	SANTOPRENE, BLACK	-
5	1	GASKET OR	NBR, BLACK	-
6	1	COUPLING NUT	BRASS	Ni PLATED
7	4	CONTACT FE	BRASS	AU PLATED
8	4	SCREW M3x5	BRASS	ZN
9	4	SLEEVE	STAINLESS STEEL 305	-
10	1	HOUSING FA	PA, BLACK	-
11	1	POLYBAG 200x200x0.050	PE	-

RELEASE STATUS | P1 | RELEASE DATE | 25.10.2017 08:25:14

QUALITY SYMBOLS
FA = 0
EC = 0
EP = 0
▼ = 0
C = 0
☒ = 0
■ = 0
G = 0

EC NO: 167046
DRWN: RSCHIEBER 2017/09/18
CHK'D:
APPR: BBRAUCH 2017/10/25

A1 REV

GENERAL TOLERANCES (UNLESS SPECIFIED)
ANGULAR TOL ± 1.0 °

4 PLACES	±
3 PLACES	±
2 PLACES	± 0.05
1 PLACE	± 0.3
0 PLACES	± 0.5

DRAFT WHERE APPLICABLE MUST REMAIN WITHIN DIMENSIONS

THIS DRAWING CONTAINS INFORMATION THAT IS PROPRIETARY TO MOLEX ELECTRONIC TECHNOLOGIES, LLC AND SHOULD NOT BE USED WITHOUT WRITTEN PERMISSION

DIMENSION UNITS: mm
SCALE: 1:1
DRWN BY: RSCHIEBER DATE: 2016/01/25
CHK'D BY: DATE:
APPR BY: JALEXANDER DATE: 2016/03/16
DRAWING SIZE: A3
THIRD ANGLE PROJECTION

molex®

FA MC 4P OC FE STR PG13.5 UNSH BK PA AU

PRODUCT CUSTOMER DRAWING

SERIES	MATERIAL NUMBER	CUSTOMER
130017	1300170065	

DOCUMENT NUMBER	DOC TYPE	DOC PART	SHEET NUMBER
1300170065	PSD	000	1 OF 1

FORMAT: master-tb-prod-A3
REVISION: G
DATE: 2017/02/06

Unikeyic Electronics

Global Electronic Components Distributor

Click to view pricing, inventory, delivery, and lifecycle information:

molex:

0194360214 0477256010 197134001 347072012 347928042 502585-0370 502584-0870 503988100 528520870 194290039 464373005 194270031 348268126 528061110 351820290 502584-1060 357470310 528523070 0464363133 194290026 197054301 34708-2028 349672001 355240920 502380-0800 5023860371 0351510214 347910140 348242245 459850483