3A, 600V Standard Surface Mount Rectifier

FEATURES

- Glass passivated chip junction
- Ideal for automated placement
- Low profile package
- Moisture sensitivity level: level 1, per J-STD-020
- RoHS Compliant
- Halogen Free

APPLICATIONS

- DC to DC converter
- Switching mode converters and inverters
- General purpose

MECHANICAL DATA

- Case: SOD-128
- Molding compound meets UL 94V-0 flammability rating
- Terminal: Matte tin plated leads, solderable per J-STD-002
- Meet JESD 201 class 2 whisker test
- Polarity: Indicated by cathode band
- Weight: 0.027g (approximately)

KEY PARAMETERS		
PARAMETER	**VALUE**	**UNIT**
I_F	3	A
V_{RRM}	600	V
I_{FSM}	50	A
$T_{J\ MAX}$	150	°C
Package	SOD-128	
Configuration	Single die	

Pb-Free RoHS COMPLIANT HALOGEN FREE



SOD-128



ABSOLUTE MAXIMUM RATINGS (T_A = 25°C unless otherwise noted)				
PARAMETER		**SYMBOL**	**S3JFS**	**UNIT**
Marking code on the device			S3JFS	
Repetitive peak reverse voltage		V_{RRM}	600	V
Reverse voltage, total rms value		$V_{R(RMS)}$	420	V
Forward current		I_F	3	A
Surge peak forward current, single half sine-wave superimposed on rated load	t = 8.3ms	I_{FSM}	50	A
	t = 1.0ms		140	A
Junction temperature		T_J	-55 to +150	°C
Storage temperature		T_{STG}	-55 to +150	°C

THERMAL PERFORMANCE

PARAMETER	SYMBOL	TYP	UNIT
Junction-to-lead thermal resistance	$R_{\Theta JL}$	14	°C/W
Junction-to-ambient thermal resistance	$R_{\Theta JA}$	74	°C/W
Junction-to-case thermal resistance	$R_{\Theta JC}$	20	°C/W

Thermal Performance Note: Units mounted on PCB (5mm x 5mm Cu pad test board)

ELECTRICAL SPECIFICATIONS (T_A = 25°C unless otherwise noted)

PARAMETER	CONDITIONS	SYMBOL	TYP	MAX	UNIT
Forward voltage(1)	I_F = 1.5A, T_J = 25°C	V_F	0.95	-	V
	I_F = 3.0A, T_J = 25°C		1.03	1.10	V
	I_F = 1.5A, T_J = 125°C		0.84	-	V
	I_F = 3.0A, T_J = 125°C		0.94	-	V
Reverse current @ rated V_R(2)	T_J = 25°C	I_R	-	1	μA
	T_J = 125°C		7	-	μA
Junction capacitance	1MHz, V_R = 4.0V	C_J	14	-	pF

Notes:

(1) Pulse test with PW = 0.3ms

(2) Pulse test with PW = 30ms

ORDERING INFORMATION

ORDERING CODE	PACKAGE	PACKING
S3JFS	SOD-128	14,000 / Tape & Reel

CHARACTERISTICS CURVES

(T_A = 25°C unless otherwise noted)

Fig.1 Forward Current Derating Curve

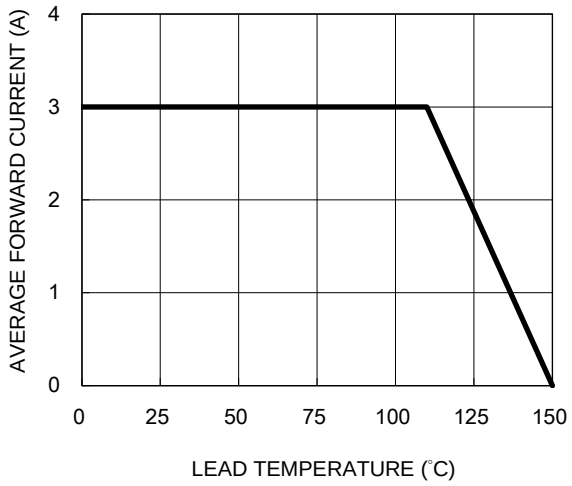

Fig.2 Typical Junction Capacitance

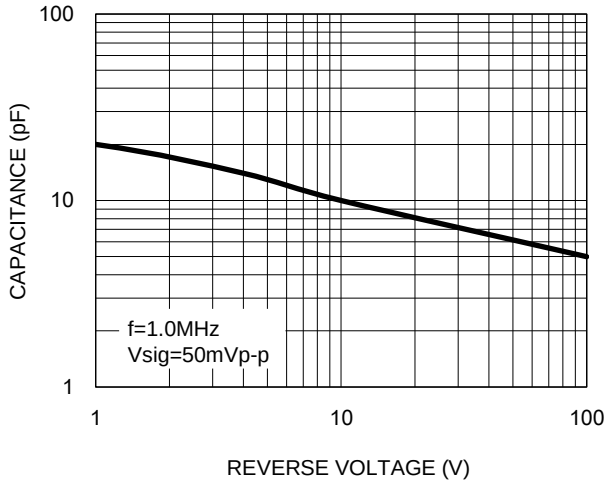

Fig.3 Typical Reverse Characteristics

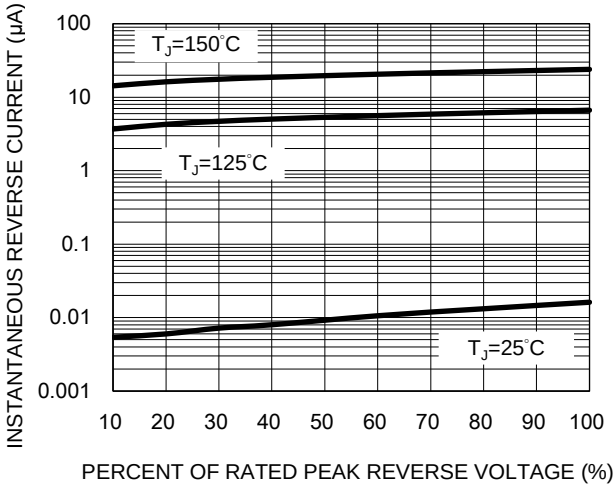

Fig.4 Typical Forward Characteristics

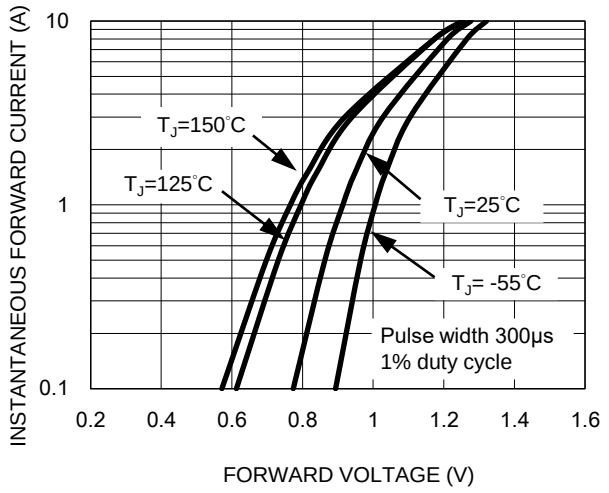

Fig.5 Typical Transient Thermal Impedance

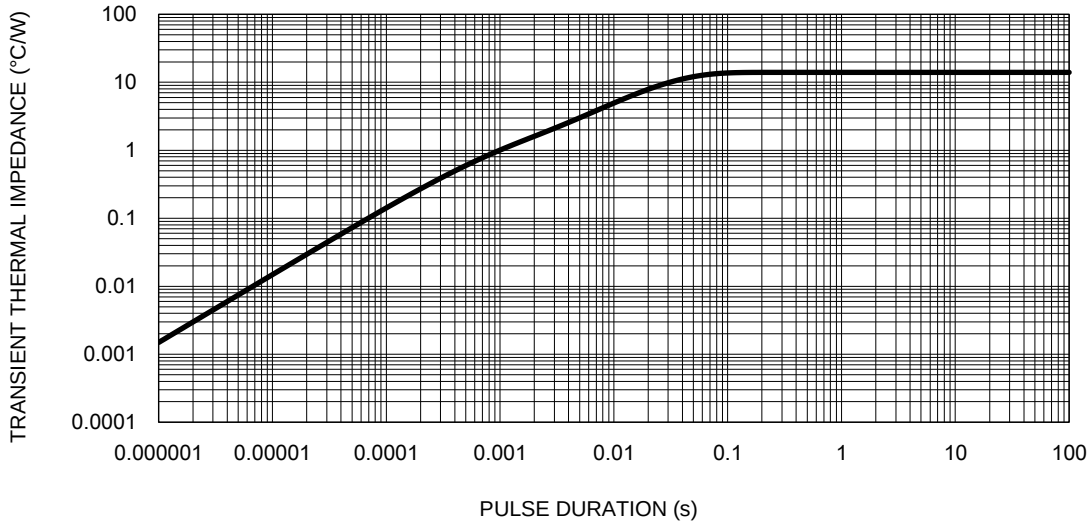

PACKAGE OUTLINE DIMENSIONS

SOD-128

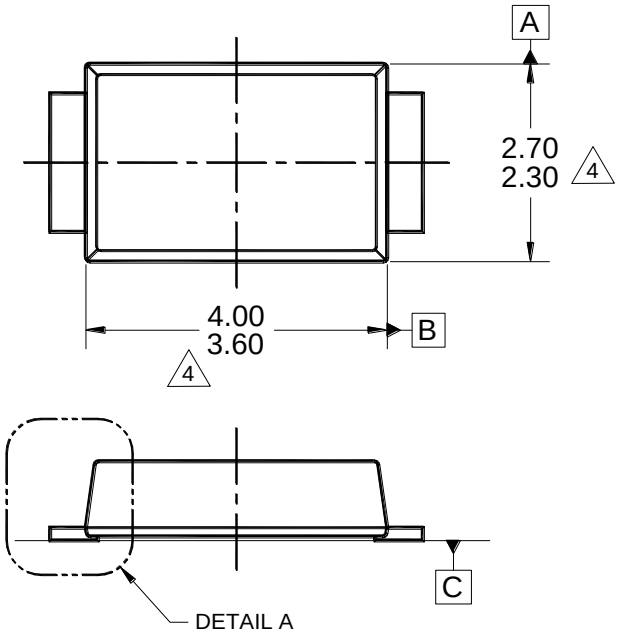

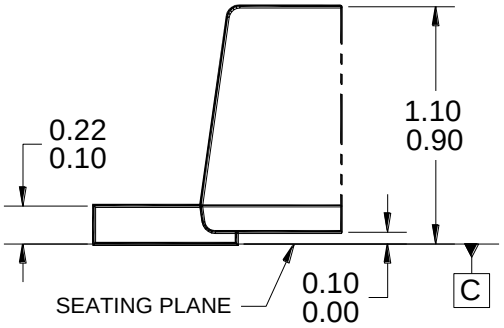

DETAIL A
(SCALE 3:1)

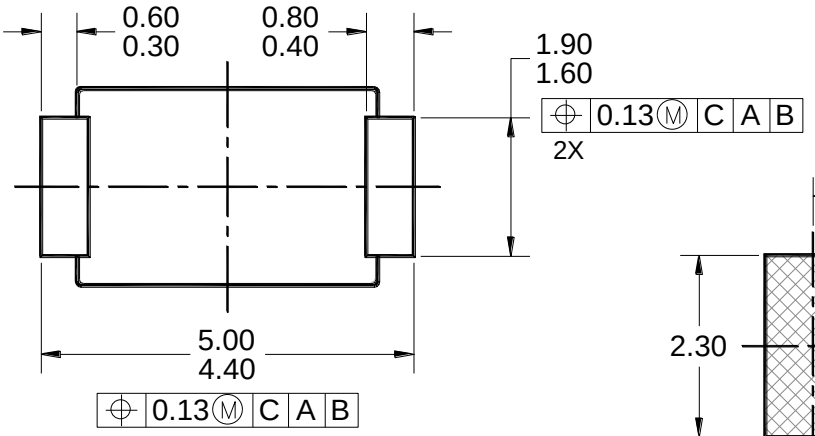

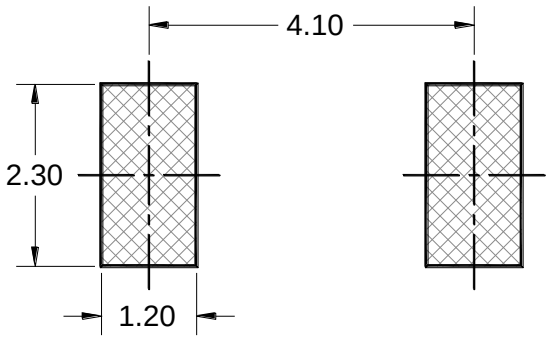

SUGGESTED PAD LAYOUT

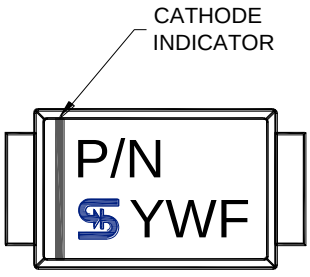

MARKING DIAGRAM

P/N = MARKING CODE
YW = DATE CODE
F = FACTORY CODE

NOTES: UNLESS OTHERWISE SPECIFIED

1. ALL DIMENSIONS ARE IN MILLIMETERS.
2. DIMENSIONING AND TOLERANCING PER ASME Y14.5M-2009.
3. PACKAGE OUTLINE REFERENCE: JEDEC DO-221, VARIATION AD, ISSUE B.
4. MODED PLASTIC BODY DIMENSIONS DO NOT INCLUDE MOLD FLASH.
5. DWG NO. REF: HQ2SD07-SOD128-039 REV A.

Notice

Specifications of the products displayed herein are subject to change without notice. TSC or anyone on its behalf, assumes no responsibility or liability for any errors or inaccuracies.

Purchasers are solely responsible for the choice, selection, and use of TSC products and TSC assumes no liability for application assistance or the design of Purchasers' products.

Information contained herein is intended to provide a product description only. No license, express or implied, to any intellectual property rights is granted by this document. Except as provided in TSC's terms and conditions of sale for such products, TSC assumes no liability whatsoever, and disclaims any express or implied warranty, relating to sale and/or use of TSC products including liability or warranties relating to fitness for a particular purpose, merchantability, or infringement of any patent, copyright, or other intellectual property right.

The products shown herein are not designed for use in medical, life-saving, or life-sustaining applications. Customers using or selling these products for use in such applications do so at their own risk and agree to fully indemnify TSC for any damages resulting from such improper use or sale.

Unikeyic Electronics

Global Electronic Components Distributor

Click to view pricing, inventory, delivery, and lifecycle information:

Taiwan Semiconductor:

BZD27C24PWH MBRS20H200CT TBS408 TLD5S24AH TLD8S12AH TSM035NB04LCZC0G TSM130NB06CR 1V5KE220A YBS2205G 5.0SMDJ51A GBPC3501 MBR1060CT RS1JLW TSM4806CS RLG BZW04-342 P4SMA15CA P6KE75A TS9011SCX RF UG2D SMA4F30AH SMBJ5V0A TSUP10M45SH 1N5400G-K R0G P6KE200CA SS24MH BZT52B8V2S GP1007 S5J R7G SMBJ6V0CA BZY55B2V7 RBG