TAOGLAS



Datasheet

Cat6A Professional Ethernet Cable

Part No:
TEC11BLK2 Series

Description:

Shielded Cat6A S/FTP 26AWG Patch Cable

Shielded 8P8C Plug to Plug

Features:

S/FTP (double shielded)

50µ" Gold plating

PoE++

Snagless with protection latch

100% Pass Patch Cord Test

1.	Introduction	3
2.	Specifications	4
3.	Mechanical	5
4.	Part numbers	9
5.	Packaging	10
	Changelog	12

Taoglas makes no warranties based on the accuracy or completeness of the contents of this document and reserves the right to make changes to specifications and product descriptions at any time without notice. Taoglas reserves all rights to this document and the information contained herein. Reproduction, use or disclosure to third parties without express permission is strictly prohibited.

1. Introduction

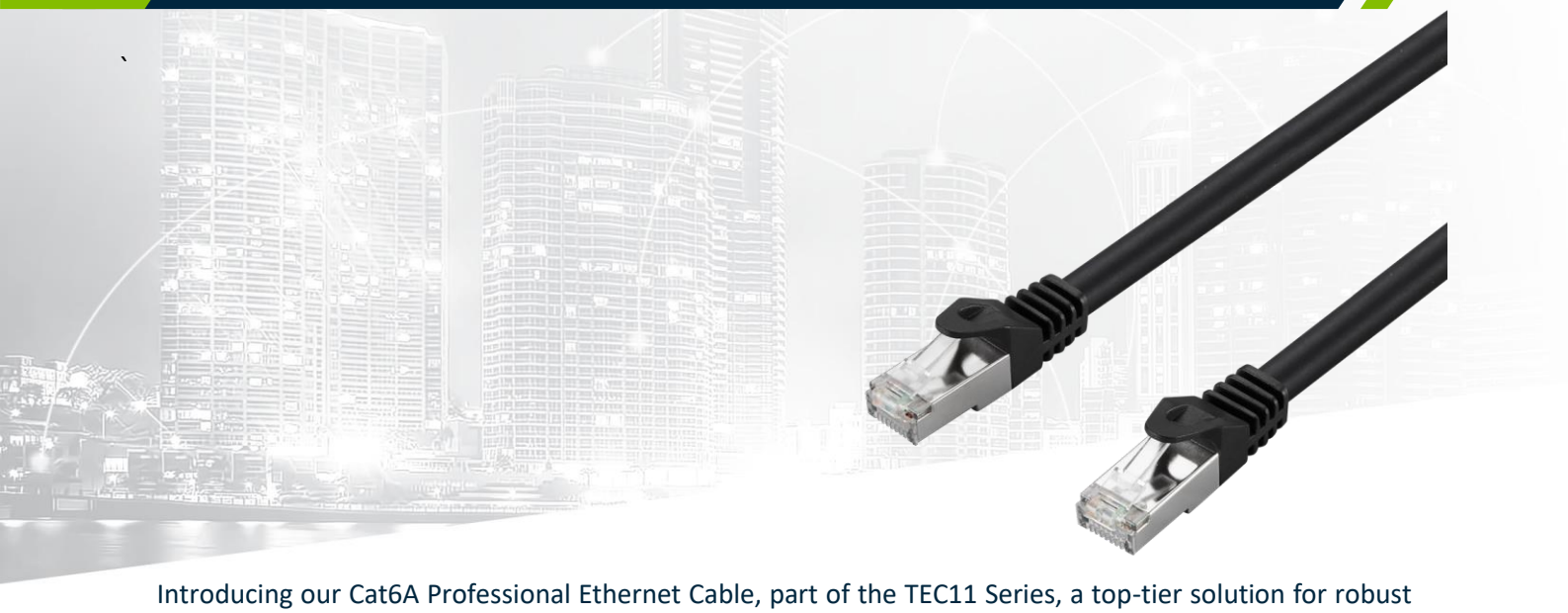

Introducing our Cat6A Professional Ethernet Cable, part of the TEC11 Series, a top-tier solution for robust and high-speed networking. This shielded Cat6A S/FTP 26AWG Patch Cable ensures optimal signal integrity, featuring an 8P8C Plug to Plug configuration for seamless connections. With S/FTP shielding, a 50µ" gold-plated three-piece plug, and snagless accompanied by a protection latch, this cable guarantees secure and reliable performance. Rigorously tested to achieve a flawless 100% Pass in the Patch Cord Test, the Cat6A Professional Ethernet Cable is your go-to choose for dependable and efficient connectivity. Elevate your network infrastructure with the superior quality and advanced features of the TEC11 Series.

Typical Applications Include:

- Home and Office Networking
- Manufacturing and Infrastructure
- Internet Service Providers
- Gaming
- Data Centres

Taoglas Magnetics offer an extensive product line of Ethernet cables designed for commercial and industrial grade applications, supporting 10/100 Base-T up to 10G Base-T. Designed to deliver top-tier performance Taoglas Ethernet cables provide reliable performance and maintain signal integrity that meets IEEE 802.3 standards, and they are ETL certified. The Power over Ethernet options are also available including PoE, PoE+ and PoE++.

The Taoglas Ethernet cables are designed with a high-quality Shielded Foiled Twisted Pair configuration to ensure data transmission remains clear and free from interference, even in environments with high EMI. The cables are equipped with snagless and a robust protection latch that firmly secures the connection. Taoglas products are fully compliant with the REACH and RoHS directive.

For customized products or support with integration, contact your regional Taoglas customer support team for further information.

2. Specifications

Data Rate	
Transmission characteristics	Cat6A up to 500MHz
Data rate	10 Gbps
	5 Gbps
	2.5 Gbps
	1 Gbps
	100 Mbps

Electrical Performance @25°C	
Electrical Test	100% Open Short, Miss Wire Test
Insulation Resistance	DC 300V 10MΩ min
Contactor Resistance	2Ω max
PoE	PoE++

FLUKE Test	
TIA CAT6A CHANNEL (+POE) TEST PASS Loop Resistance	<25Ω
Unbalance Resistance	<0.2Ω
Pair to Pair resistance	<0.2Ω
3FT, 6FT, 10FT, 15FT CAT6A PATCH CORD TEST	PASS 100%

Material Specifications	
Shield	Plated Nickel
Pins	50µ" Gold plating
Plug	Polycarbonate, 94V-2, NO Poison

Environmental Specifications	
Operating Temperature	-20°C TO +60°C

Compliance
ETL recognized - FILE NO. 5027866
IEEE 802.3af/802.3at/802.3bt PoE Standard (PoE+ AND PoE++) Patch Cable Use
RoHS and REACH Compliant

Storage requirements	
Humidity	MSL - 1
Storage Temperature	-40°C TO +85°C

3. Mechanical Drawings

3.1 Cable

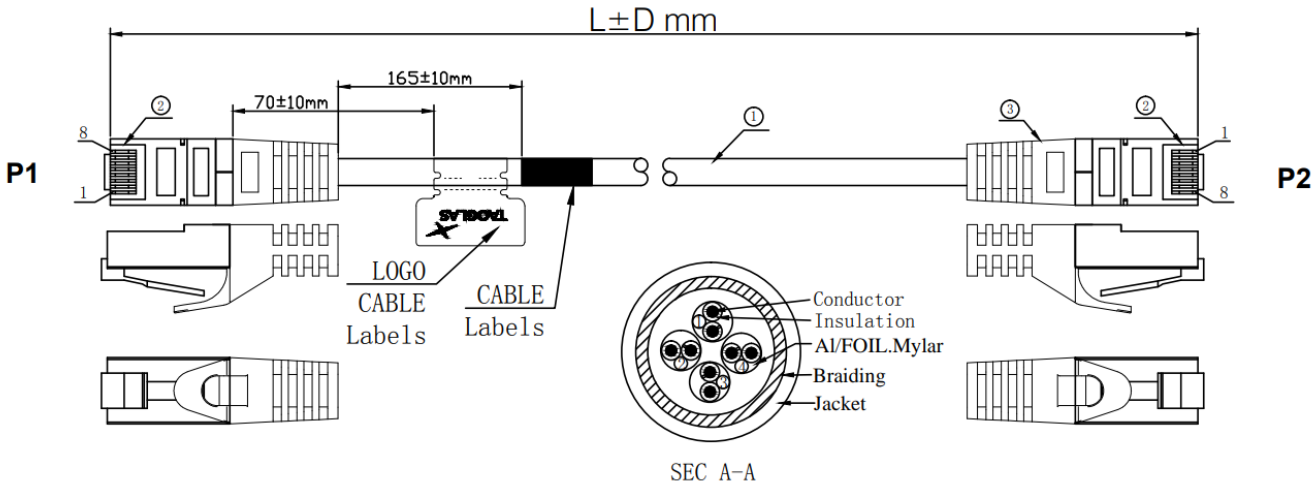

P/N	L	D
TEC11BLK2.0914	914mm (3ft)	± 30 mm
TEC11 BLK2.1829	1829mm (6ft)	± 30 mm
TEC11 BLK2.3048	3048mm (10ft)	± 50 mm
TEC11 BLK2.4572	4572mm (15ft)	± 50 mm

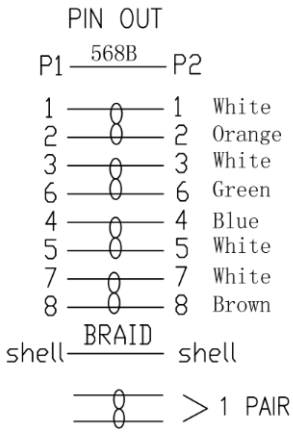

Mechanical Specification	
Outer Diameter (OD)	6.2 ± 0.2mm
Cable construction	26AWG (7/0.16BC 1Pair + AL/FOIL) x 4
	Braiding (5/16/0.10TC)
	PVC JACKET
Connector 1	RJ45
Connector 2	RJ45

P/N	Weight (g)
TEC11BLK2.0914	47.51
TEC11BLK2.1829	83.76
TEC11BLK2.3048	133
TEC11BLK2.4572	191.41

3.2 Cable label

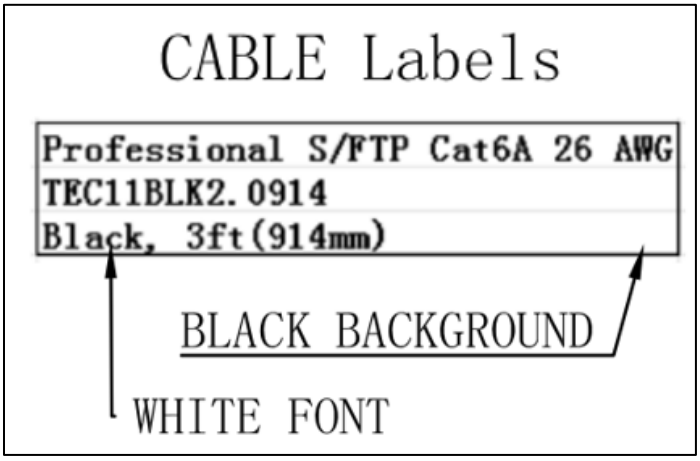

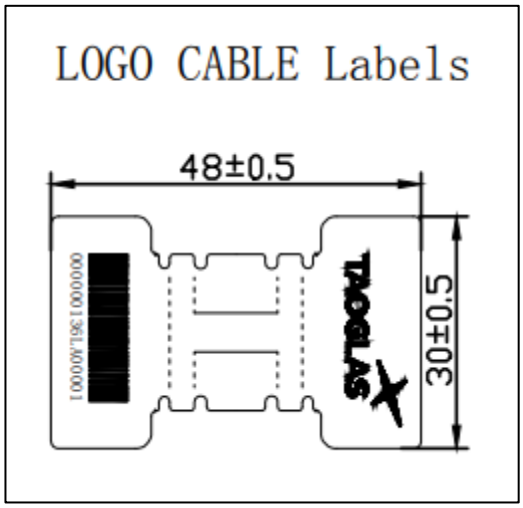

Print:www.taoglas.com TAOGLAS CAT6A S/FTP COPPER PVC PATCH CABLE CONFORMS TO ISO/IEC 11801 & EN 50288 & TIA/EIA 568 D.2 c(ETL)us 5027866 Listed 4PR 26AWG 60° C STRANDED

3.3 Plug

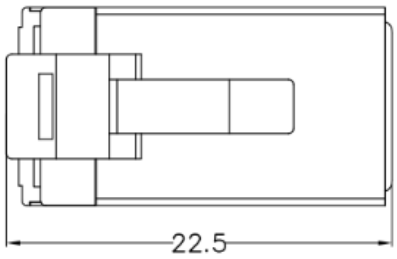
22.5

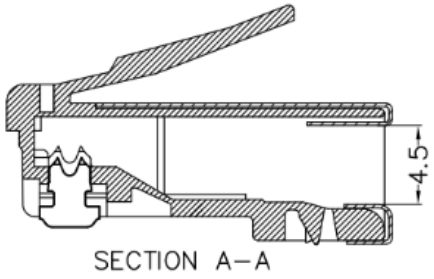
4.5
SECTION A–A

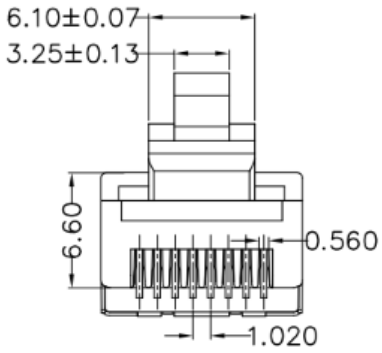
6.10±0.07
3.25±0.13
6.60
0.560
1.020

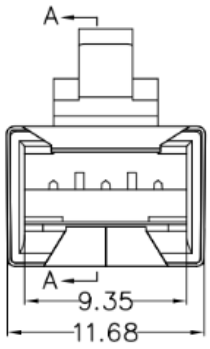
A
A
9.35
11.68

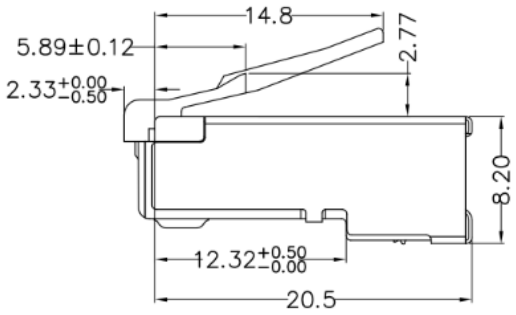
14.8
5.89±0.12
2.33+0.00 −0.50
2.77
8.20
12.32+0.50 −0.00
20.5

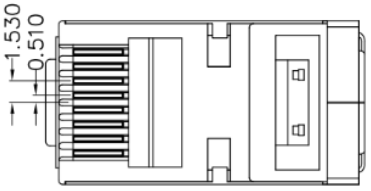
1.530
0.510

3.4 Boot

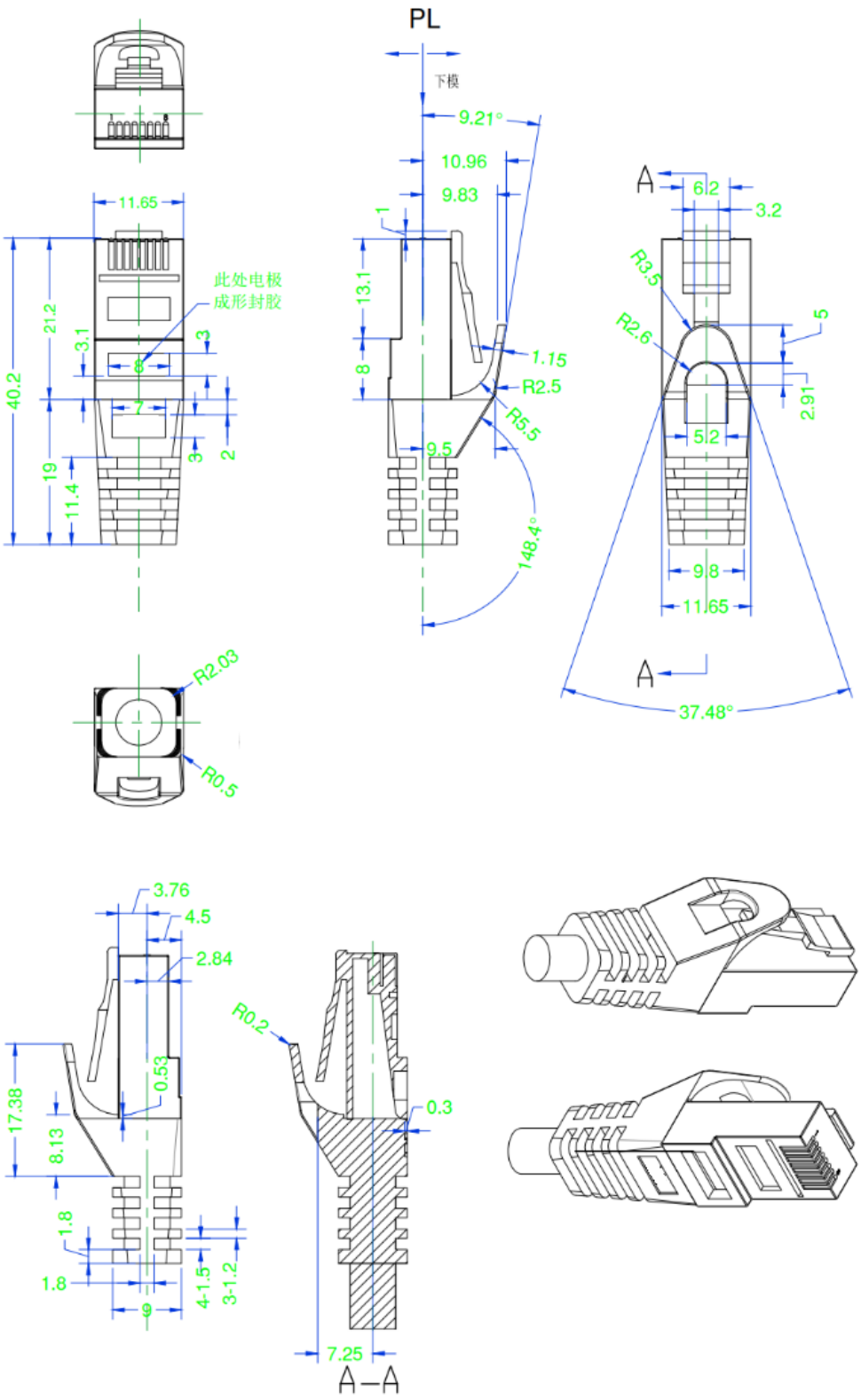
PL
下模
9.21°
10.96
9.83
11.65
此处电极
成形封胶
40.2
21.2
3.1
3
8
7
3
2
19
11.4
13.1
8
1
1.15
R2.5
R5.5
9.5
148.4°
A
6.2
3.2
R3.5
R2.6
5
2.91
5.2
9.8
11.65
A
37.48°
R2.03
R0.5
3.76
4.5
2.84
0.53
17.38
8.13
1.8
1.8
9
4-1.5
3-1.2
R0.2
0.3
7.25
A–A

4. Part numbers

4.1 TEC11BLK2 Series

Taoglas P/N	Colour	Length
TEC11BLK2.0914	Black	3ft (914mm)
TEC11BLK2.1829	Black	6ft (1829mm)
TEC11BLK2.3048	Black	10ft (3048mm)
TEC11BLK2.4572	Black	15ft (4572mm)

5. Packaging

5.1 SPQ

1 pcs/bag

Bag dimension: 210*265 mm

Taoglas P/N	Winding Cable Size (D*D)	SPQ Weight
TEC11BLK2.0914	120*120mm	57.51g
TEC11BLK2.1829	150*150mm	93.76g
TEC11BLK2.3048	160*160mm	143g
TEC11BLK2.4572	160*160mm	201.41g





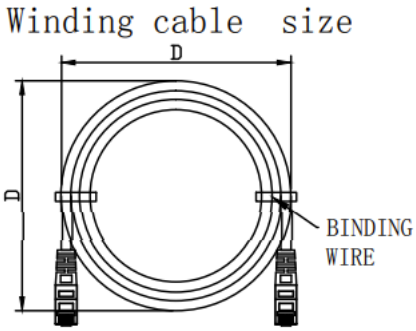

5.2 Bag Label

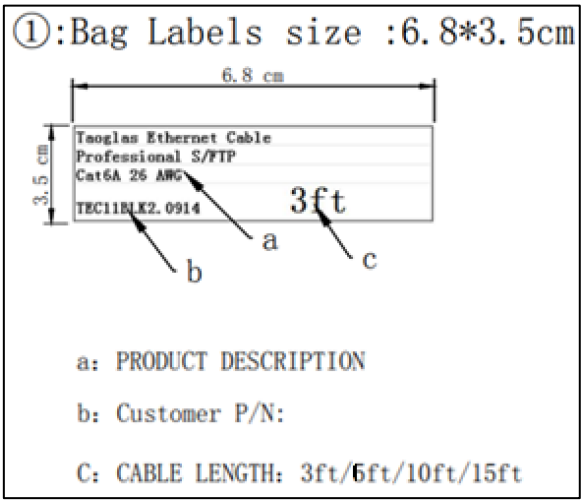

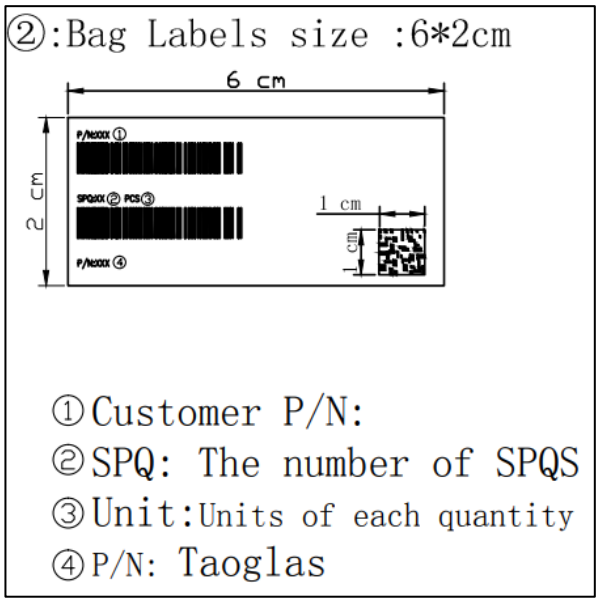

5.3 Carton

Carton dimensions: 400*300*280mm



Taoglas P/N	Bags per Carton *Estimated value	Carton Weight
TEC11BLK2.0914	120pcs/carton	7431.2g
TEC11BLK2.1829	70pcs/carton	7093.2g
TEC11BLK2.3048	45pcs/carton	6965g
TEC11BLK2.4572	40pcs/carton	8586.4g

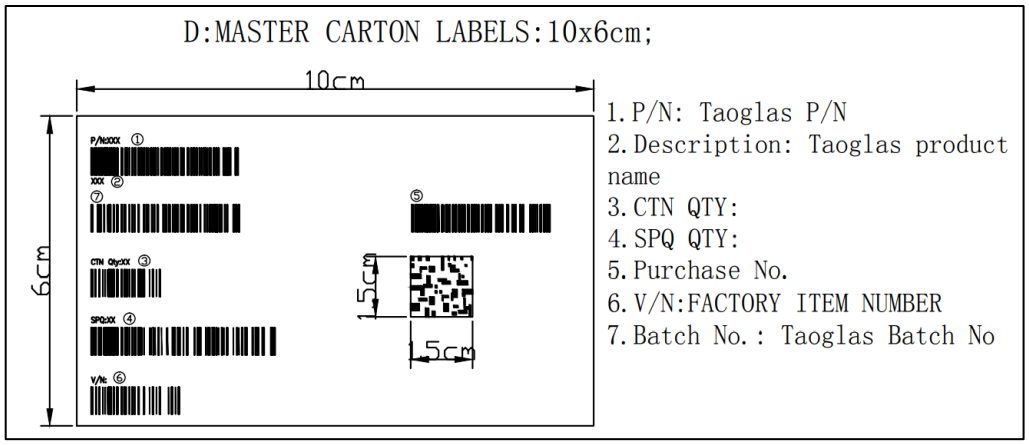

Changelog

Changelog for the datasheet

SPE-23-8-296 – TEC11BLK2

Revision: A (Original First Release)	
Date:	2024-01-01
Notes:	
Author:	Javier Vasena

Previous Revisions

TAOGLAS®

www.taoglas.com



© Taoglas

Unikeyic Electronics

Global Electronic Components Distributor

Click to view pricing, inventory, delivery, and lifecycle information:

TAOGLAS:

RECE.20449.001E.01 TG.30.8112 TI.42.A113 MA251.A.BI.001 AGGBP.SLS.25A.07.0060A TI.45.A113 TI.33.A111 ISA.05.A.033822 FK.G3.SMBFST.D.AP FK2FIG FXUB66.01.0150C GSA.8827.A.101111 ALA.01.07.0095A LLP.2500.X.B.30 LLP.5875.Y.A.30 WS.03.B.305151 FXP830.24.0100B FXUB71.A.54.C.001 OMB.868.B05F21 QHA.50.A.301111 TG.55.8113W A.80.A.101111 PCB.MMCXFRAJ.A TI.84.A113 FXC.46.A.DG FXUB70.A.07.C.001 PMB.MA9.01 AGGBP.SLS.18A.07.0060A EMPCB.SMAMST.A PC104.07.0165C