BAT5403WE6327HTSA1

Schottky Rectifier Diodes

Features

Extremely Fast Switching Speed
Low Forward Voltage
Pb-Free Package is Available

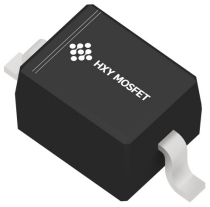

SOD-323



Package Marking and Ordering Information

Product ID	Pack	Marking	Qty(PCS)
BAT5403WE6327HTSA1	SOD-323	L9	3000

Maximum Ratings (Ta=25°C unless otherwise noted)

Parameter	Symbol	Rating	Unit
Reverse Voltage	V_{RM}	30	V
Forward Current	I_F	200	mA
Repetitive Peak Forward Current	I_{FRM}	300	
Non−Repetitive Peak Forward Current (t < 1s)	I_{FSM}	600	
Power Dissipation	P_d	200	mW
-Derate above 25°C		1.57	mW/°C
Thermal Resistance Junction to Ambient	$R_{\theta JA}$	635	°C/W
Junction Temperature	T_J	150	°C
Storage Temperature range	T_{stg}	-55 to 150	

Electrical Characteristics (T_a=25°C unless otherwise specified)

Parameter	Symbol	Test Conditions	Min	Typ	Max	Unit
Reverse breakdown voltage	V_R	I_R= 10 uA	30			V
Forward voltage	V_F	I_F= 0.1 mA			0.24	
		I_F= 1 mA			0.32	
		I_F= 10 mA			0.4	
		I_F= 30 mA			0.5	
		I_F= 100 mA			0.8	
Reverse voltage leakage current	I_R	V_R= 25 V			2	uA
Junction capacitance	C_j	V_R= 1 V, f= 1 MHz			10	pF
Reverse recovery time	t_{rr}	I_F=I_R=10mA,$I_{R(REC)}$ = 1mA			5	ns

Typical Characteristics

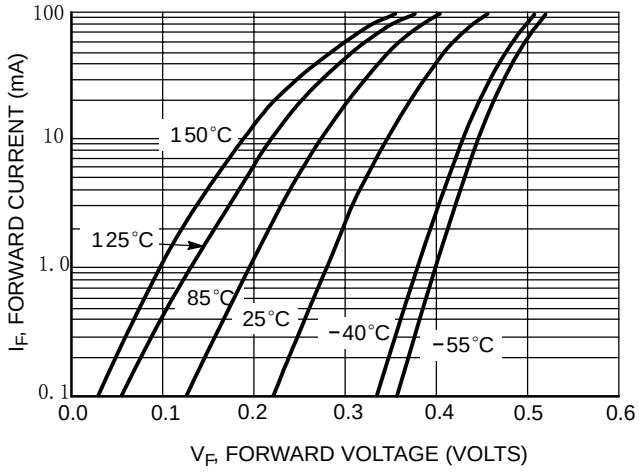

Figure 1. Forward Voltage

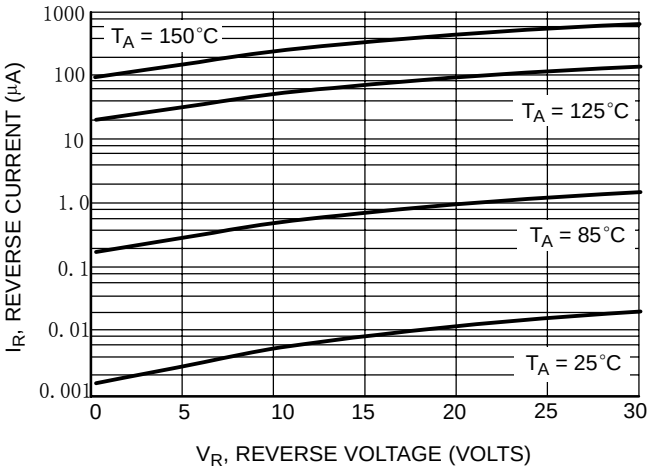

Figure 2. Leakage Current

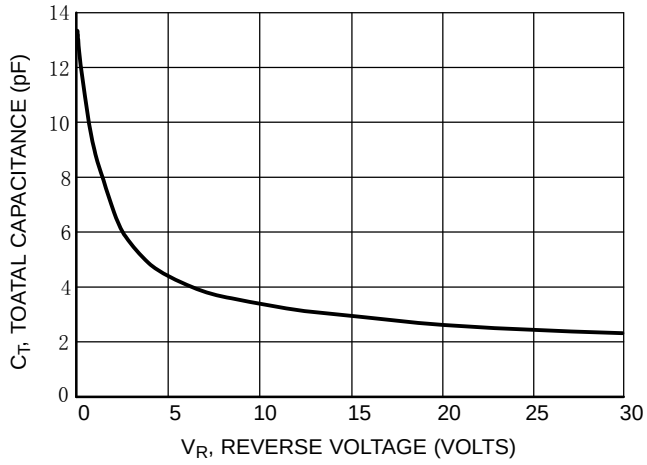

Figure 3. Total Capacitance

SOD-323 Package Outline Dimensions

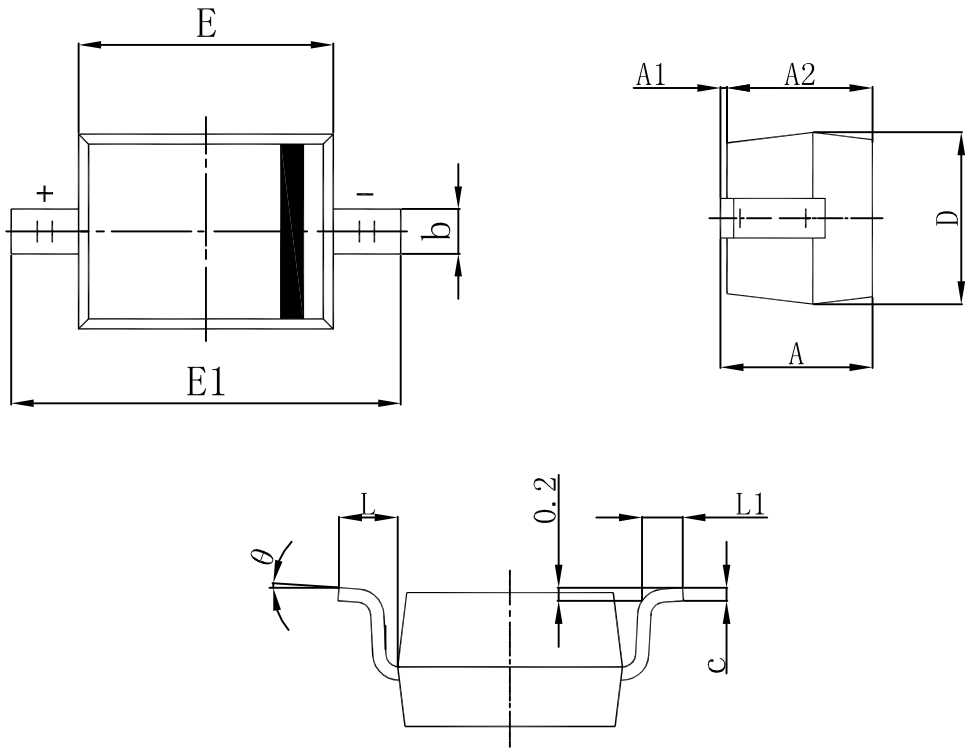

Symbol	Dimensions In Millimeters		Dimensions In Inches	
	Min	Max	Min	Max
A		1.100		0.043
A1	0.000	0.100	0.000	0.004
A2	0.800	1.000	0.031	0.039
b	0.250	0.350	0.010	0.014
c	0.080	0.150	0.003	0.006
D	1.200	1.400	0.047	0.055
E	1.600	1.800	0.063	0.071
E1	2.500	2.750	0.098	0.108
L	0.475 REF		0.019 REF	
L1	0.250	0.400	0.010	0.016
θ	0°	8°	0°	8°

Attention

■ Any and all HUA XUAN YANG ELECTRONICS products described or contained herein do not have specifications that can handle applications that require extremely high levels of reliability, such as life-support systems, aircraft's control systems, or other applications whose failure can be reasonably expected to result in serious physical and/or material damage. Consult with your HUA XUAN YANG ELECTRONICS representative nearest you before using any HUA XUAN YANG ELECTRONICS products described or contained herein in such applications.

■ HUA XUAN YANG ELECTRONICS assumes no responsibility for equipment failures that result from using products at values that exceed, even momentarily, rated values (such as maximum ratings, operating condition ranges, or other parameters) listed in products specifications of any and all HUA XUAN YANG ELECTRONICS products described or contained herein.

■ Specifications of any and all HUA XUAN YANG ELECTRONICS products described or contained herein stipulate the performance, characteristics, and functions of the described products in the independent state, and are not guarantees of the performance, characteristics, and functions of the described products as mounted in the customer's products or equipment. To verify symptoms and states that cannot be evaluated in an independent device, the customer should always evaluate and test devices mounted in the customer's products or equipment.

■ HUA XUAN YANG ELECTRONICS CO.,LTD. strives to supply high-quality high-reliability products. However, any and all semiconductor products fail with some probability. It is possible that these probabilistic failures could
give rise to accidents or events that could endanger human lives, that could give rise to smoke or fire, or that could cause damage to other property. When designing equipment, adopt safety measures so that these kinds of accidents or events cannot occur. Such measures include but are not limited to protective circuits and error prevention circuits for safe design, redundant design, and structural design.

■ In the event that any or all HUA XUAN YANG ELECTRONICS products(including technical data, services) described or contained herein are controlled under any of applicable local export control laws and regulations, such products must not be exported without obtaining the export license from the authorities concerned in accordance with the above law.

■ No part of this publication may be reproduced or transmitted in any form or by any means, electronic or mechanical, including photocopying and recording, or any information storage or retrieval system, or otherwise, without the prior written permission of HUA XUAN YANG ELECTRONICS CO.,LTD.

■ Information (including circuit diagrams and circuit parameters) herein is for example only ; it is not guaranteed for volume production. HUA XUAN YANG ELECTRONICS believes information herein is accurate and reliable, but no guarantees are made or implied regarding its use or any infringements of intellectual property rights or other rights of third parties.

■ Any and all information described or contained herein are subject to change without notice due to product/technology improvement, etc. When designing equipment, refer to the "Delivery Specification" for the HUA XUAN YANG ELECTRONICS product that you intend to use.

Unikeyic Electronics

Global Electronic Components Distributor

Click to view pricing, inventory, delivery, and lifecycle information:

HXY MOSFET:

AZ4007-01H HCEZ36V,L3F HESD36VD3B PESDSC2FD5VU RLSD32A121V 60N06 HSEN2411D3 HLY323BC1524L HRCLAMP3371ZCTFT TPSMB28A-VR AQ15C-01FTG HACPDQC5V0-HF HSEN3611D3 LM393DR-HXY PESDLC2FD3V3BH ESD5L5.0C-HXY HSD15C.TCT HSTS521050B331 PESDNC2XD5VBL HESDSLC3V3D3B HPTVSUC3D5VB AZ4836-01L ESD5LM5.0C-HXY HAZ4007-01H HSG3D15B3.3MA BV05C-H PESDNC2XD5VBF PJEC5V0M1FN2 PJSD24CW_R1 TPSMB100CA-VR