QUICK CONNECT SOCKET OUTLETS

Surface Mounting Socket Outlet

Top Cable Entry Only



- Screwless terminals maintenance free
- Cable entry, one at top (open)

IP44 *Splashproof*

A CURRENT	**V** VOLTAGE	**Hz** FREQUENCY	**2P+E**	EARTH HR POS.	**3P+E**	EARTH HR POS.	**3P+N+E**	EARTH HR POS.
16 IP44	**110**	50-60	11912	4				
	240	50-60	11895	6				
	415	50-60			11905	6	112001	6
32 IP44	**110**	50-60	11918	4				
	240	50-60	11919	6				
	415	50-60			11922	6	112002	6

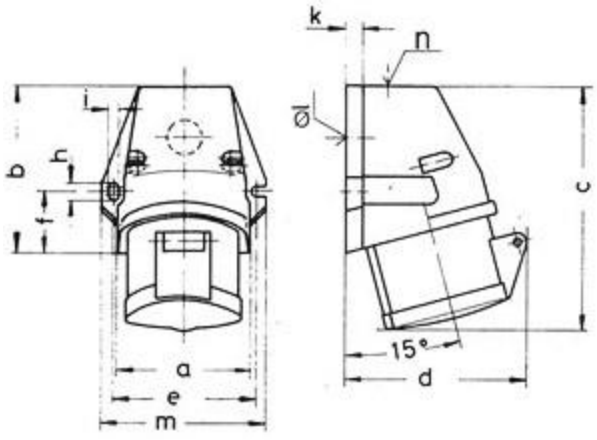

Amperes	16			32		
Poles	3	4	5	3	4	5
a	59.5	72.4	72.4	79.1	79.1	79.1
b	90	90	90	92	92	92
c	130	130	131	142	142	142
d	85	96	98	103	103	106
e	62	77	77	84	84	84
f	33.5	33.5	33.5	30	30	30
h	9	9	9	9	9	9
i	5.5	5.5	5.5	5.5	5.5	5.5
k	8	9	9	9	9	9
Ø l	21	21	21	21	21	21
m	72	87	87	94	94	94
n	M20	M25	M25	M25	M25	M25
Conductor mm² min	1.5	1.5	1.5	2.5	2.5	2.5
Conductor mm² max	4	4	4	10	10	10

Unikeyic Electronics

Global Electronic Components Distributor

Click to view pricing, inventory, delivery, and lifecycle information:

CEENorm:

2138