Wireless command device
RF BF 74 RS SW SW915
Material number: 1329158

Features/Options

- sWave® wireless technology
- No power supply, no wiring and pipe laying required
- Easy programming of receiver
- Output signal can be individually configurated at the receiver
- Actuator: Black push-button RS SW
- Degree of protection IP 65
- Actuator made of plastic

Note

- Attention! The push-button RF BF 74 RSSW and RF BF 74 RSGE cannot be positioned next to each other, neither 2 of the same type.

Dimensions

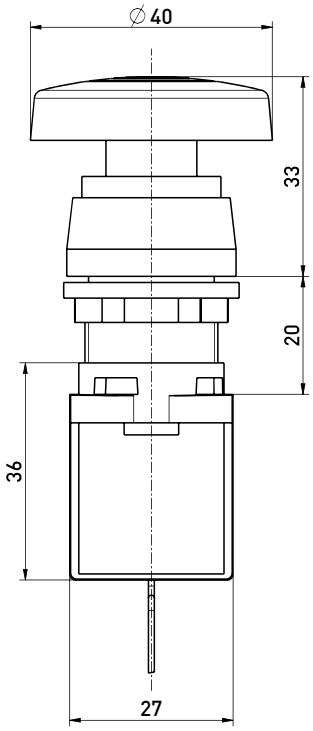

Technical data

Standards	EN 60947-5-1; EN 61000-6-2, -6-3, EN 61000-4-2, -4-20; EN 301 489-1; EN 301 489-3; EN 300 220-1; EN 300 220-2
Enclosure	Thermoplastic, Polyamid PA 66
Degree of protection	Use only with enclosure for command devices
Protocol	sWave®
Ambient temperature	–20 °C ... +65 °C
Operation cycles	approx. 12000 telegrams at repetitions/h
Voltage supply	Electrodynamic energy generator
Frequency	915 MHz (USA, Canada and Australia)
Transmission power	< 10 mW
Data rate	66 kbps
Channel bandwidth	400 kHz
Sensing range	max. 450 m outside, max. 40 m inside
Mechanical life	800 000 operations
Actuating time	min. 80 ms
Note	no status signal available
Approvals	USA: FCC: XK5-RF95SW915LR; Canada: IC: 5158A-RF95SW915LR

Errors and omissions excepted.

steute Schaltgeräte GmbH & Co. KG | Brückenstraße 91 32584 Löhne, Germany | Telefon +49 (0) 5731 745-0 Telefax +49 (0) 5731 745-200 | info@steute.com www.steute.com

Unikeyic Electronics

Global Electronic Components Distributor

Click to view pricing, inventory, delivery, and lifecycle information:

ZF Friedrichshafen:

0015-0646 0E1301H0 0E19-00K0 D4PB-LCB-PK5 DB1C-B1LB DB3C-B1RC KDH3ALA2GBB DG23-B2RA E19-00K GPTCLS11 KFB3ALA2RBB 0E1350H0 E19-50H WRG32F2FBRLN DC1C-C3AA E78-30A DB2C-A1AA GS101201 WRG32F2BBBNN 0E65-00A0 CRE22F2BBGLE GS100502 6141232 6141234 CU103603 E7940A STE-1053107ES73 STE-1348797ACCY CRE-22F2BBULE WRG32F2BBGEN