Toohong

# MJE15030

## DESCRIPTION

- With TO-220C package
- Complement to type MJE15031
- High transition frequency
- DC current gain specified to 4.0 amperes
  $h_{FE}$ = 40 (Min) @ $I_C$ = 3.0 Adc
  $h_{FE}$ = 20 (Min) @ $I_C$ = 4.0 Adc

## APPLICATIONS

- Designed for use as high–frequency drivers in audio amplifiers.

**PINNING**

| PIN | DESCRIPTION |
|---|---|
| 1 | Base |
| 2 | Collector;connected to mounting base |
| 3 | Emitter |

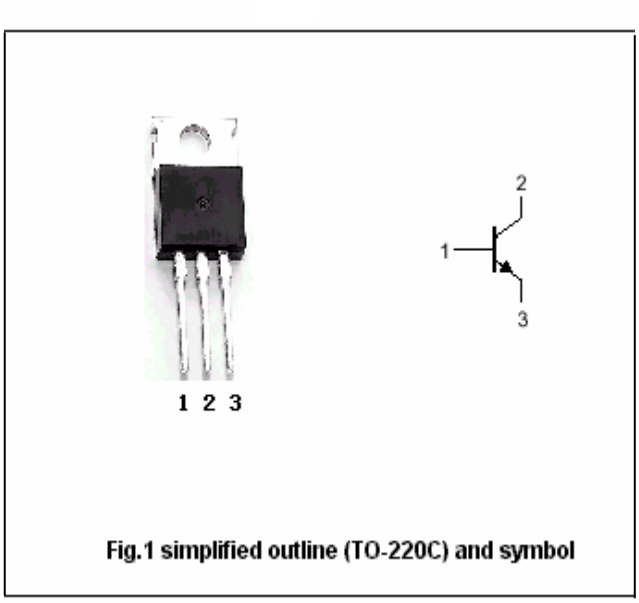


Fig.1 simplified outline (TO-220C) and symbol

## Absolute maximum ratings (Tc=25℃)

| SYMBOL | PARAMETER | CONDITIONS | VALUE | UNIT |
|---|---|---|---|---|
| $V_{CBO}$ | Collector-base voltage | Open emitter | 150 | V |
| $V_{CEO}$ | Collector-emitter voltage | Open base | 150 | V |
| $V_{EBO}$ | Emitter-base voltage | Open collector | 5 | V |
| $I_C$ | Collector current (DC) | | 8 | A |
| $I_{CM}$ | Collector current-Peak | | 16 | A |
| $I_B$ | Base current | | 2 | A |
| $P_D$ | Total power dissipation | $T_a$=25℃ | 2 | W |
| | | $T_C$=25℃ | 50 | |
| $T_j$ | Junction temperature | | 150 | ℃ |
| $T_{stg}$ | Storage temperature | | -65~150 | ℃ |

## THERMAL CHARACTERISTICS

| SYMBOL | PARAMETER | MAX | UNIT |
|---|---|---|---|
| $R_{th\ j\text{-}C}$ | Thermal resistance ; junction to case | 2.5 | ℃/W |
| $R_{th\ j\text{-}A}$ | Thermal resistance , junction to ambient | 62.5 | ℃/W |

## CHARACTERISTICS

**Tj=25℃ unless otherwise specified**

| SYMBOL | PARAMETER | CONDITIONS | MIN | TYP. | MAX | UNIT |
|---|---|---|---|---|---|---|
| $V_{CEO(SUS)}$ | Collector-emitter sustaining voltage | $I_C$=10mA; $I_B$=0 | 150 | | | V |
| $V_{CEsat}$ | Collector-emitter saturation voltage | $I_C$=1A ;$I_B$=0.1A | | | 0.5 | V |
| $V_{BE}$ | Base-emitter on voltage | $I_C$=1A ; $V_{CE}$=2V | | | 1.0 | V |
| $I_{CBO}$ | Collector cut-off current | $V_{CB}$=150V; $I_E$=0 | | | 10 | μA |
| $I_{CEO}$ | Collector cut-off current | $V_{CE}$=150V; $I_B$=0 | | | 0.1 | mA |
| $I_{EBO}$ | Emitter cut-off current | $V_{EB}$=5V; $I_C$=0 | | | 10 | μA |
| $h_{FE-1}$ | DC current gain | $I_C$=0.1A ; $V_{CE}$=2V | 40 | | | |
| $h_{FE-2}$ | DC current gain | $I_C$=2A ; $V_{CE}$=2V | 40 | | | |
| $h_{FE-3}$ | DC current gain | $I_C$=3A ; $V_{CE}$=2V | 40 | | | |
| $h_{FE-4}$ | DC current gain | $I_C$=4A ; $V_{CE}$=2V | 20 | | | |
| $f_T$ | Transition frequency | $I_C$=0.5A;$V_{CE}$=10V;f=10MHz | 30 | | | MHz |

**PACKAGE OUTLINE**

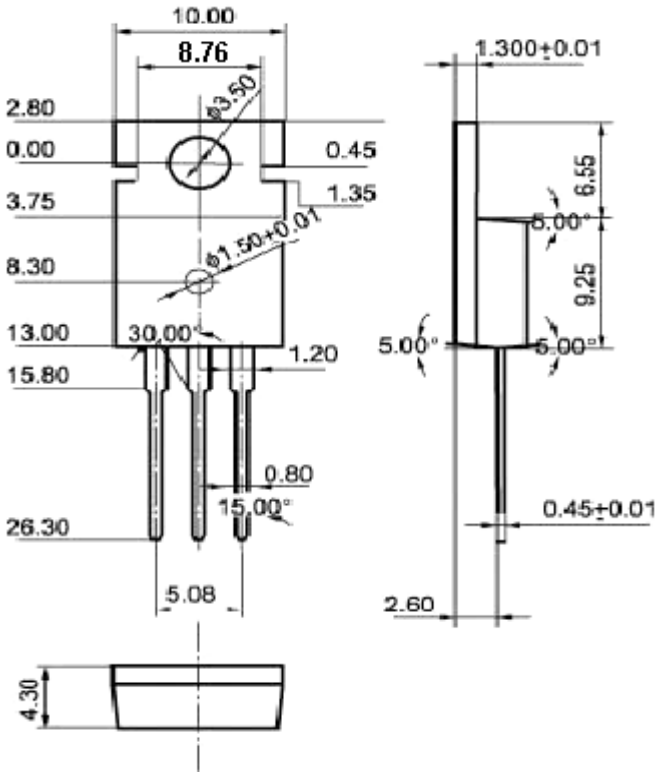


**Fig.2 Outline dimensions (unindicated tolerance: ±0.10mm)**

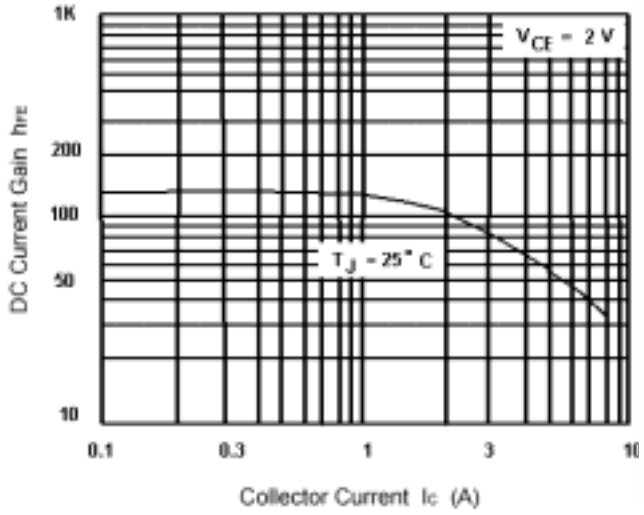


**Fig.3** DC current Gain

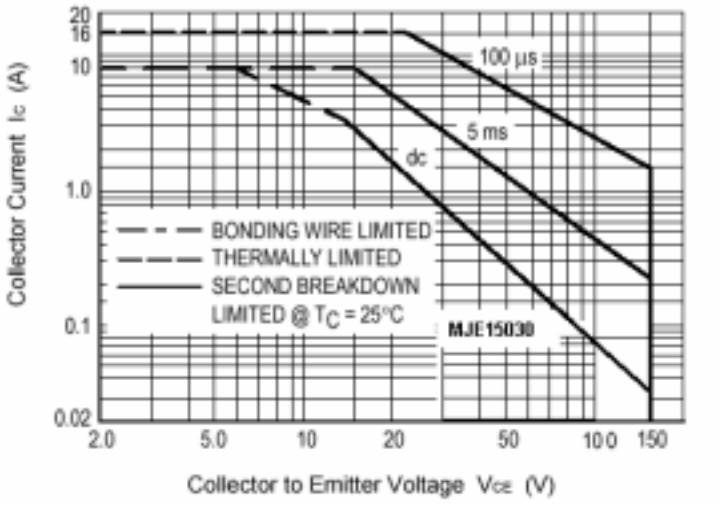


**Fig.4** Safe Operating Area

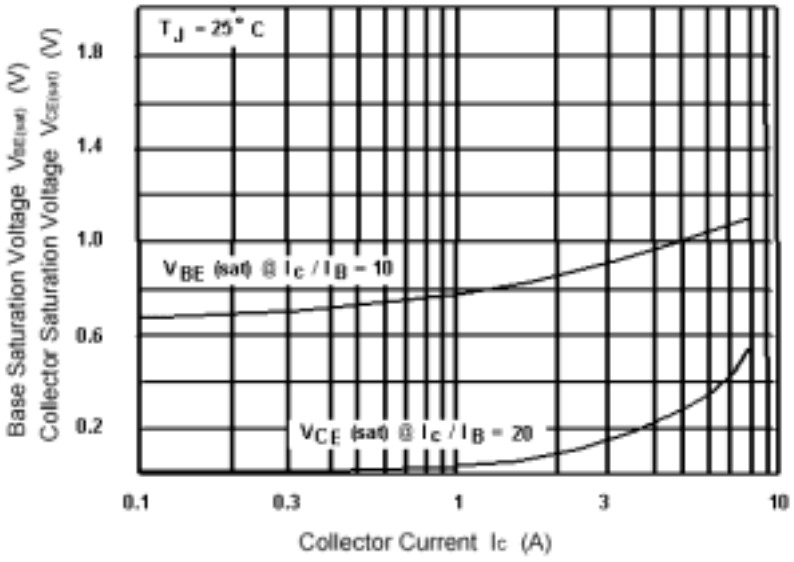


**Fig.5** Base-Emitter Saturation Voltage
Collector-Emitter Saturation Voltage