HJKE
WWW.HJKEIC.COM

MMBZ27VALT1G

2-Line Uni-directional TVS Diode Array

Features

- 350W peak pulse power (8/20μs)
- Protects one two uni-directional line(s)
- Ultra low leakage: nA level
- Operating voltage: 24V
- Low clamping voltage
- Complies with following standards:
  - IEC 61000-4-2 (ESD) immunity test
    - Air discharge: ±30kV
    - Contact discharge: ±30kV
  - IEC61000-4-5 (Lightning) 7A (8/20μs)
- RoHS Compliant



SOT-23

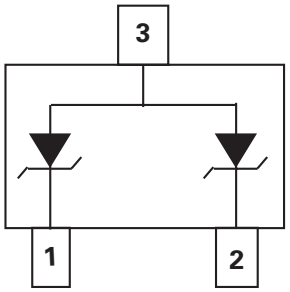

Circuit diagram

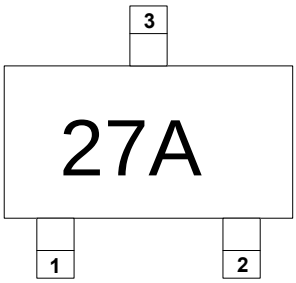

27A= Device code

Marking (Top View)

Mechanical Characteristics

- Package: SOT-23
- Lead Finish: Matte Tin
- Case Material: “Green” Molding Compound.
- Terminal Connections: See Diagram Below
- Marking Information: See Below

Applications

- Peripherals
- Industrial Equipment
- Notebook Computers
- Portable Instrumentation
- Microprocessor Based Equipment
- Cell Phone Handsets and Accessories
- Personal Digital Assistants (PDAs) and Pagers

Ordering Information

Part Number	Packaging	Reel Size
MMBZ27VALT1G	3000/Tape & Reel	7 inch

Absolute Maximum Ratings (T_A=25°C unless otherwise specified)

Parameter	Symbol	Value	Unit
Peak Pulse Power (8/20μs)	Ppk	350	W
Peak Pulse Current (8/20μs)	I_{PP}	7	A
ESD per IEC 61000−4−2 (Air) ESD per IEC 61000−4−2 (Contact)	V_{ESD}	±30 ±30	kV
Operating Temperature Range	T_J	−55 to +125	°C
Storage Temperature Range	Tstg	−55 to +150	°C

Electrical Characteristics (T_A=25°C unless otherwise specified)

QSM24						
Parameter	**Symbol**	**Min**	**Typ**	**Max**	**Unit**	**Test Condition**
Reverse Working Voltage	V_{RWM}			24	V	Pin 1 to Pin 3 or Pin 2 to Pin 3
Breakdown Voltage	V_{BR}	26.7			V	I_T = 1mA
Reverse Leakage Current	I_R			0.3	μA	V_{RWM} = 24V
Forward Voltage	V_F		0.8	1.2	V	I_F = 10mA
Clamping Voltage	V_C		30	33	V	I_{PP} = 1A (8 x 20μs pulse)
Clamping Voltage	V_C		44	50	V	I_{PP} = 7A (8 x 20μs pulse)
Junction Capacitance	C_J		45		pF	VR = 0V, f = 1MHz, Pin 1 to Pin 3 or Pin 2 to Pin 3
Junction Capacitance	C_J		22		pF	VR = 0V, f = 1MHz, Pin 1 to Pin 2

Typical Performance Characteristics (TA=25°C unless otherwise Specified)

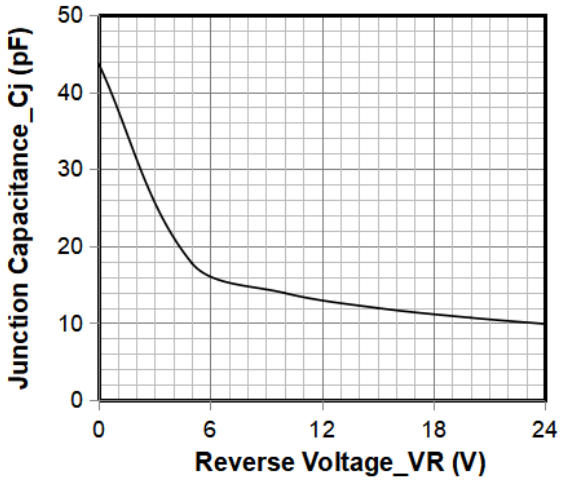

Junction Capacitance vs. Reverse Voltage

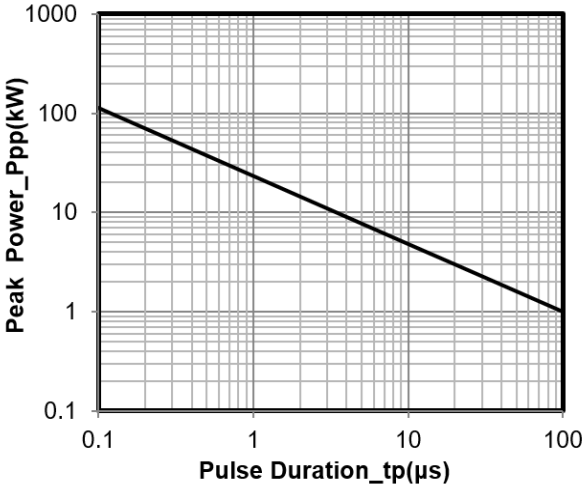

Peak Pulse Power vs. Pulse Time

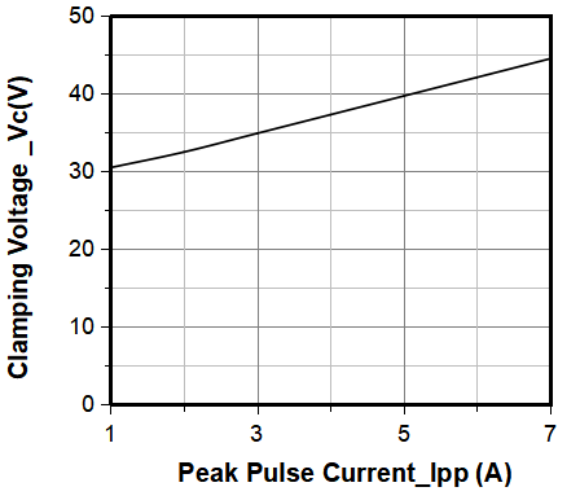

Clamping Voltage vs. Peak Pulse Current

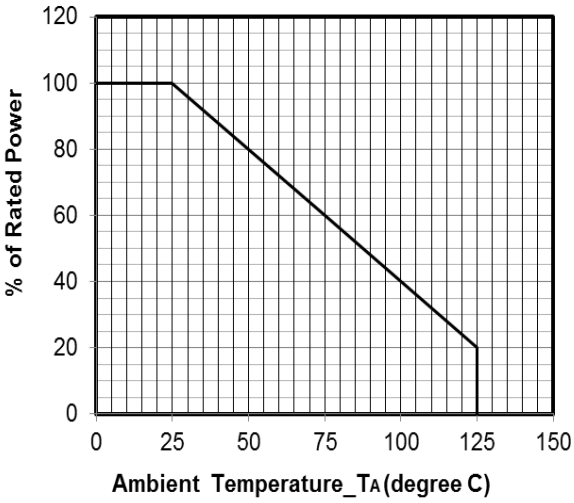

Power Derating Curve

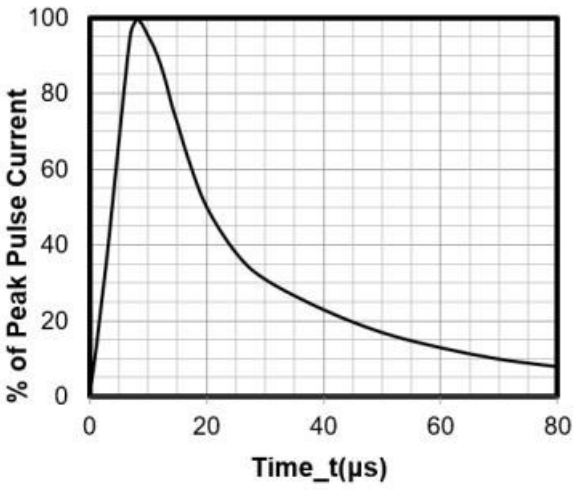

8 X 20μs Pulse Waveform

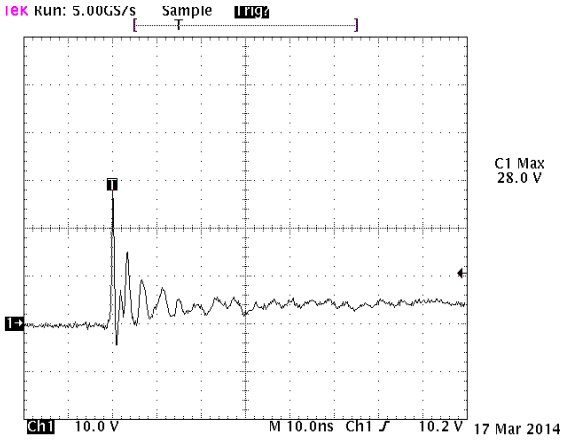

Note：Data is taken with a 10x attenuator

ESD Clamping Voltage
8 kV Contact per IEC61000−4−2

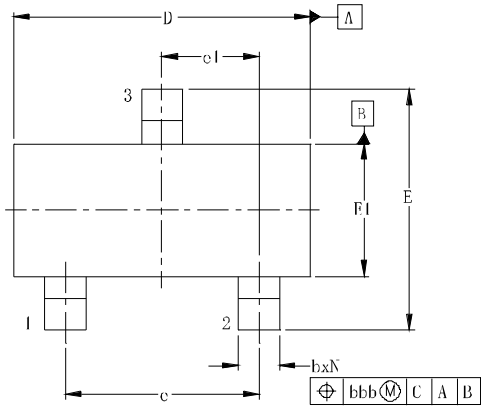

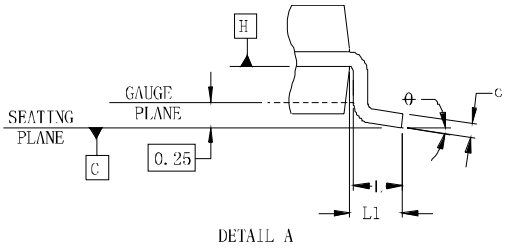

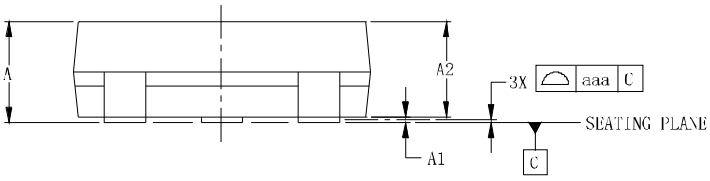

DIMENSIONS						
SYM	INCHES			MILLIMETERS		
	MIN	NOM	MAX	MIN	NOM	MAX
A	0.035	-	0.045	0.89	-	1.15
A1	0.000	-	0.004	0.01	-	0.10
A2	0.035	0.037	0.040	0.88	0.95	1.02
b	0.012	-	0.020	0.30	-	0.51
c	0.003	-	0.007	0.08	-	0.18
D	0.110	0.114	0.120	2.80	2.90	3.04
E	0.082	0.093	0.104	2.10	2.37	2.64
E1	0.047	0.051	0.055	1.20	1.30	1.40
e	0.075			1.90BSC		
e1	0.037			0.95BSC		
L	0.015	0.020	0.024	0.40	0.50	0.60
L1	0.022			0.55		
N	3			3		
θ	0°	-	8°	0°	-	8°
aaa	0.004			0.10		
bbb	0.008			0.20		

Suggested Land Pattern

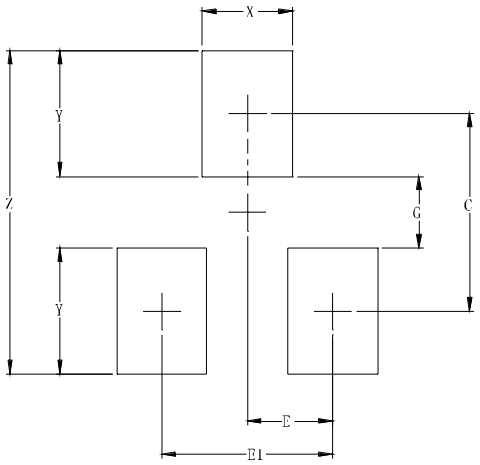

DIMENSIONS		
SYM	INCHES	MILLIMETERS
C	0.087	2.20
E	0.037	0.95
E1	0.075	1.90
G	0.031	0.80
X	0.039	1.00
Y	0.055	1.40
Z	0.141	3.60