1 Product Identification

GDNR	6045	-	3R3	M	T	F
①	②		③	④	⑤	⑥

① Product Symbol

② Dimensions（See two）

③ Inductance Value (3R3:3.3μH)

④ Inductance Tolerance (J:±5%;K:±10%; M:±20%; N:±30%)

⑤ Packaging Style (B: Bulk; T: Tape & Reel)

⑥ Lead Free

2 Appearance, Dimensions(mm)

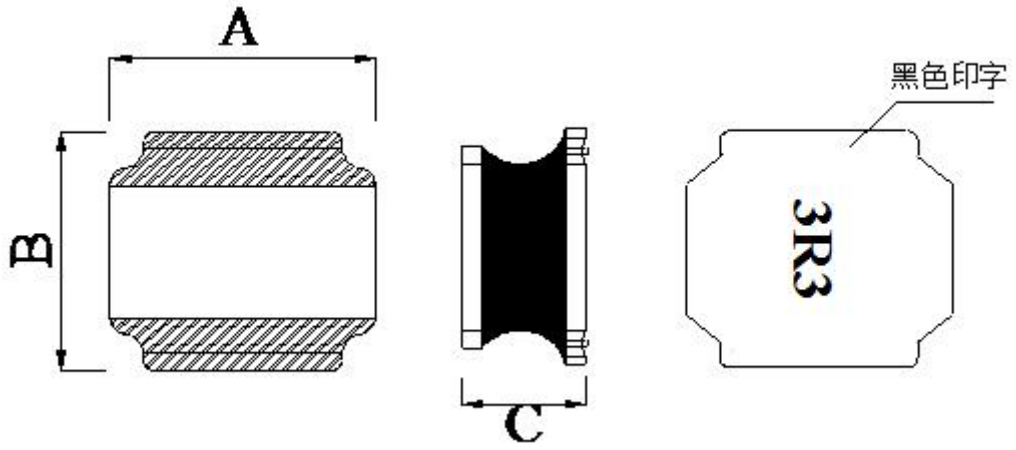

A	B	C
6.0±0.2	6.0±0.2	4.5 Max

LAND PATTERN DIMENSIONS

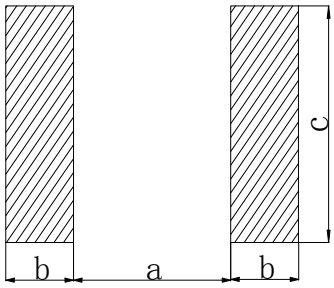

/	mm
a	2.8
b	1.7
c	5.7

3 Specifications

Part No.	Inductance L0(uH) @100KHz/1V	RDC (mΩ)	Saturation Current (A)Max	Heat Rating Current (A)Max
GDNR6045-1R5MTF	1.5±20%	18±30%	7.5	3.8
GDNR6045-1R8MTF	1.8±20%	14±30%	7.2	5.2
GDNR6045-3R3MTF	3.3±20%	28±30%	5.0	3.35
GDNR6045-4R7MTF	4.7±20%	30±30%	3.5	3.3
GDNR6045-6R8MTF	6.8±20%	40±30%	3.3	3.0
GDNR6045-150MTF	15.0±20%	70±30%	2.2	1.85
GDNR6045-220MTF	22.0±20%	105±30%	2.0	1.5
GDNR6045-330KTF	33.0±10%	160±30%	1.5	1.35
GDNR6045-471MTF	470±20%	2340±30%	0.5	0.42

※ Note

*Rated current is the DC current that reduces the initial inductance by 30% or when the temperature rises △ T = 40℃

4 Packaging

(1) Dimensions of Reel（mm）

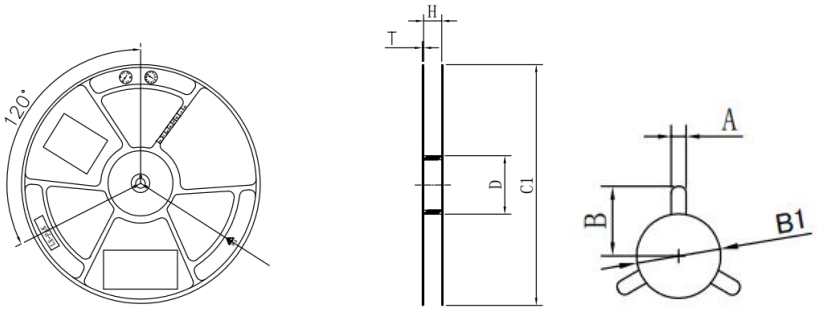

	Size（mm）
C1	330 ± 3.0
H	16.8 ± 0.5
A	2.5± 0.3
B	10.75 ± 0.3
B1	13+0.5/-0.2
T	2.0 ± 0.2
D	100±1.0

(2) Dimensions of Tape (mm):

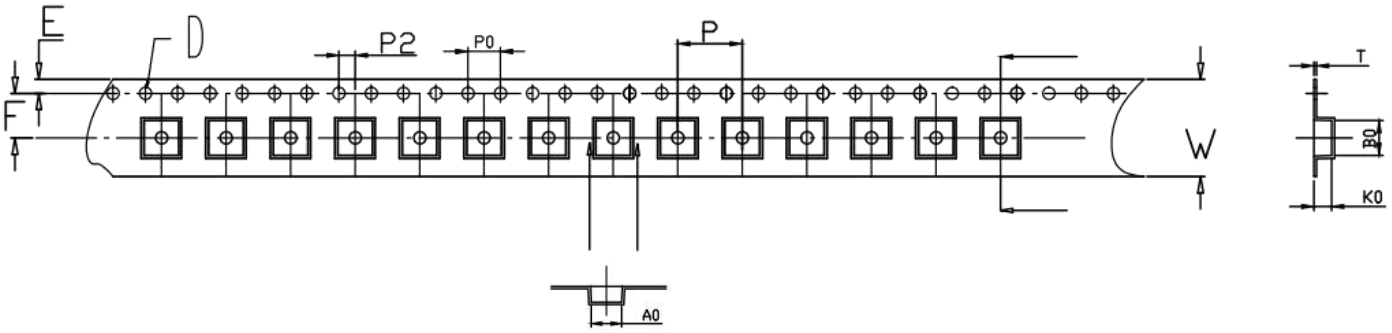

W	A0	B0	K0	P	F	E	D	P0	P2	T	Packaging quantity
16.0 ±0.3	6.6 ±0.1	6.6 ±0.1	4.5 ±0.1	12.0 ±0.1	7.5 ±0.1	1.75 ±0.1	1.5+ 0.1/-0.0	4.0 ±0.1	2.0 ±0.1	0.4 ±0.05	1000PCS/REEL